C transposition 1 of Mode 1 [2]

1 2 3 ♭5 ♭6 ♭7 1 2 3 ♭5 ♭6 ♭7

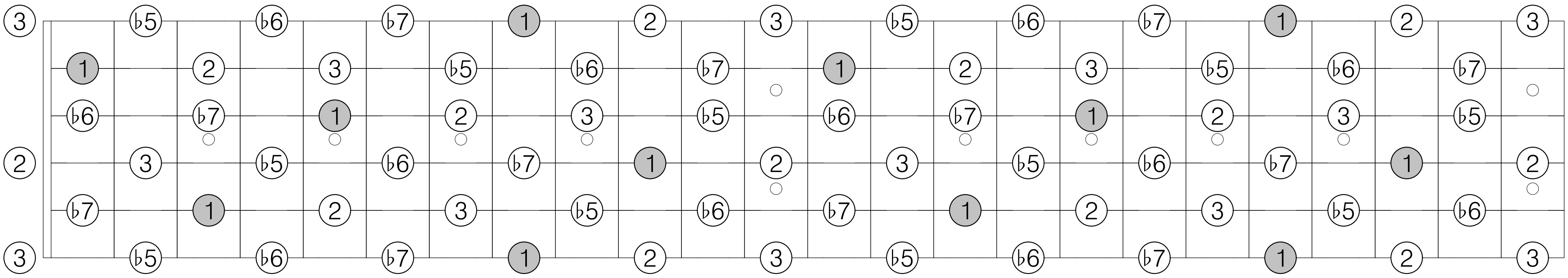

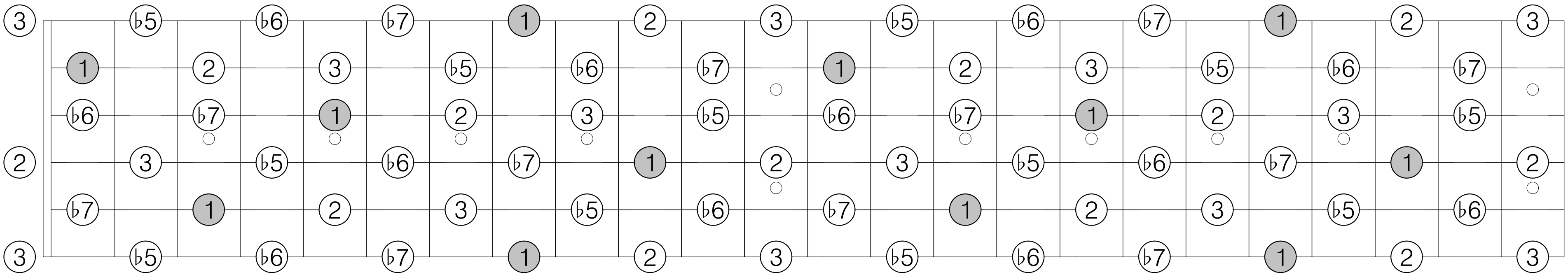

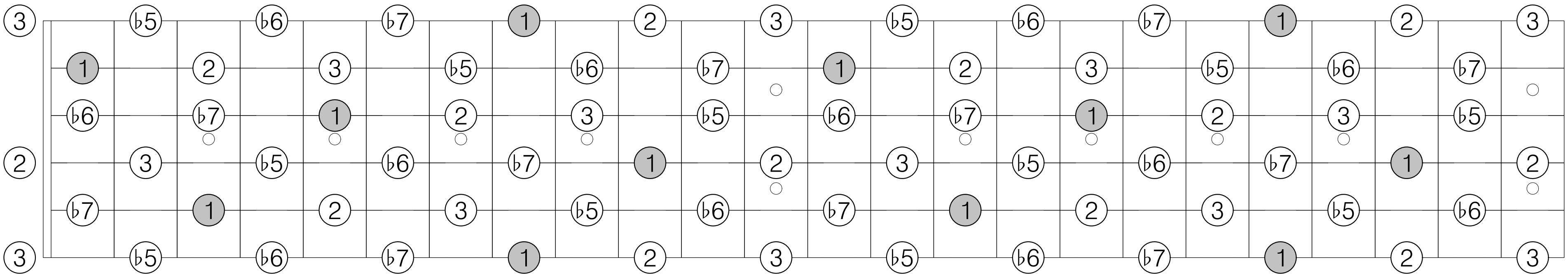

C transposition 1 of Mode 2 [1, 2]

1 ♭2 ♭3 3 ♭5 5 6 ♭7 1 ♭2 ♭3 3 ♭5 5 6 ♭7

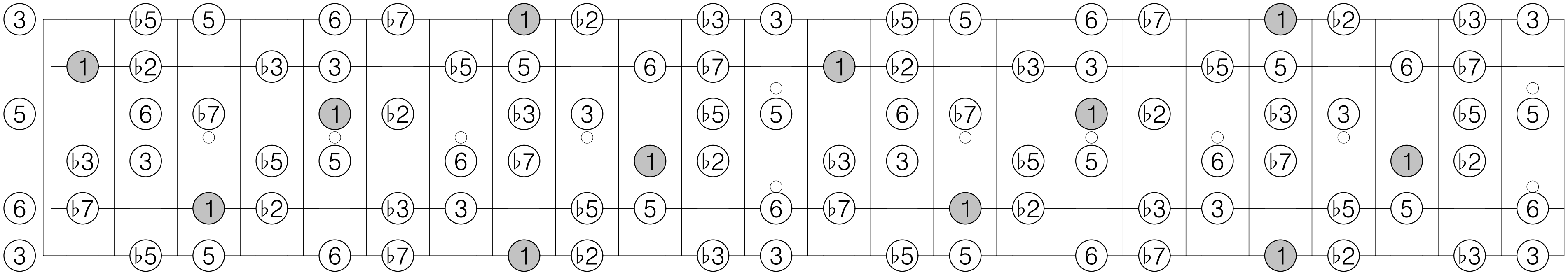

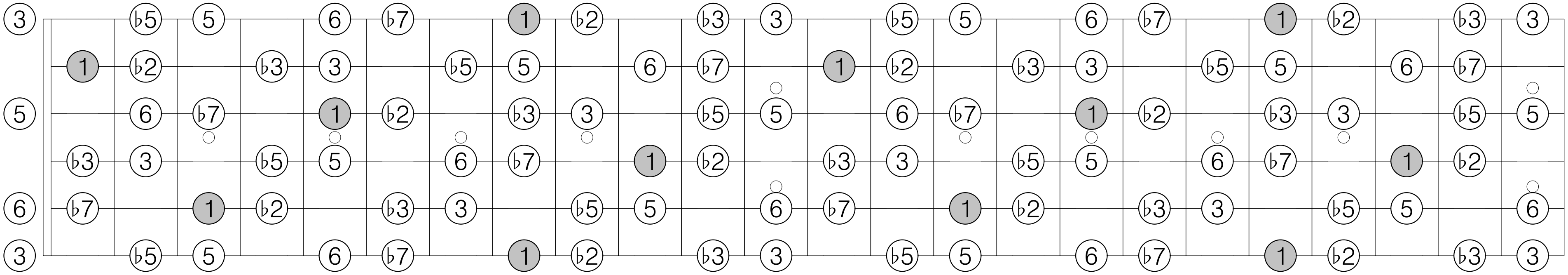

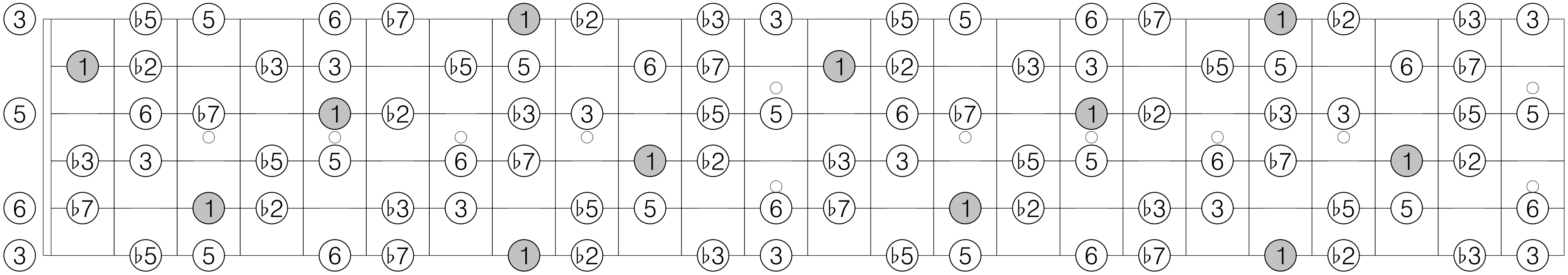

C transposition 2 of Mode 2 [1, 2]

1 2 ♭3 4 ♭5 ♭6 6 7 1 2 ♭3 4 ♭5 ♭6 6 7

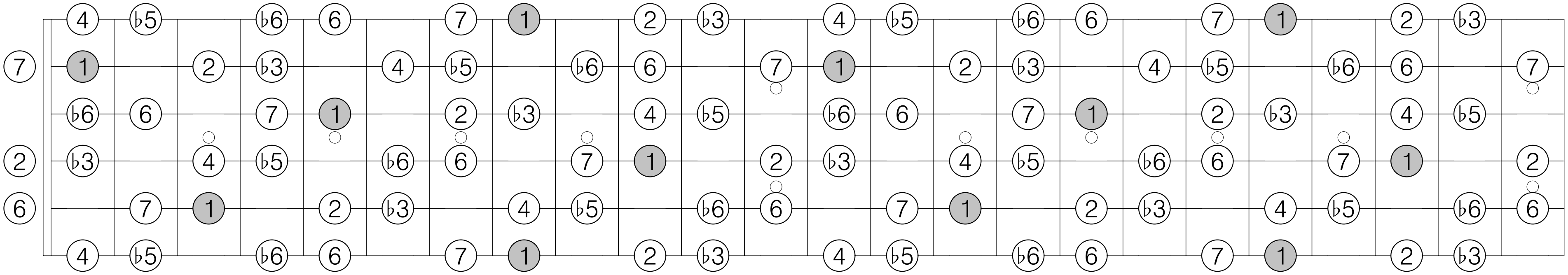

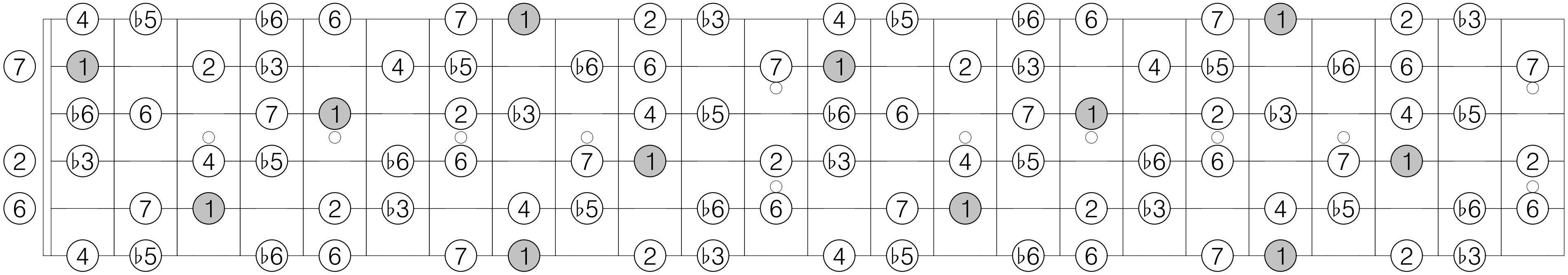

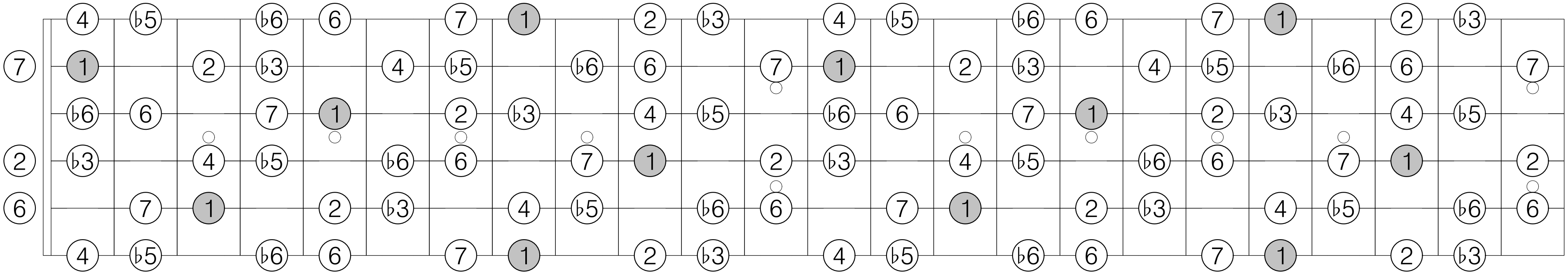

C transposition 1 of Mode 3 [1, 1, 2]

1 ♭2 2 3 4 ♭5 ♭6 6 ♭7 1 ♭2 2 3 4 ♭5 ♭6 6 ♭7

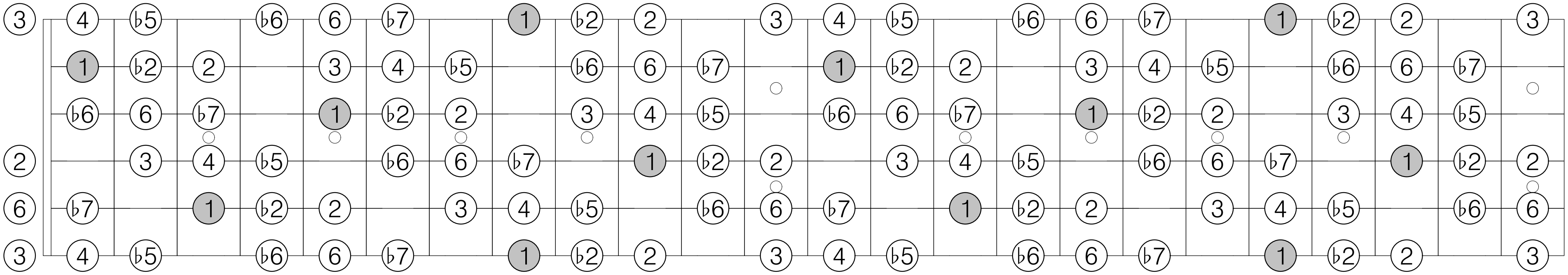

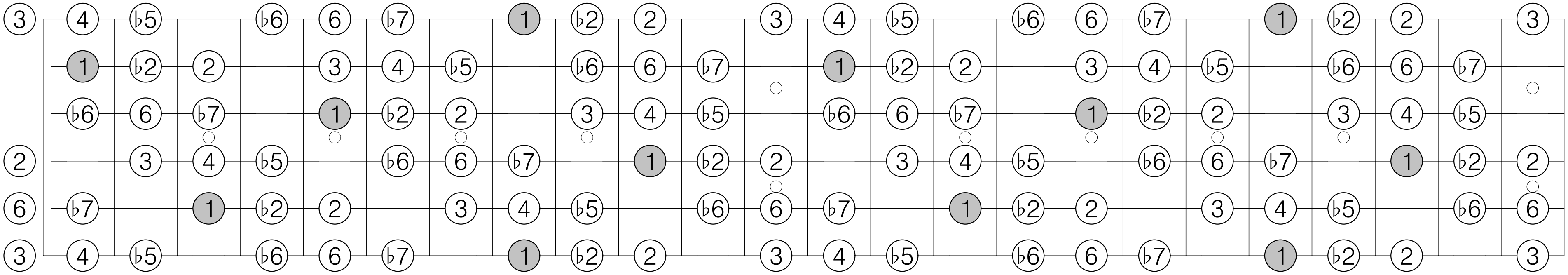

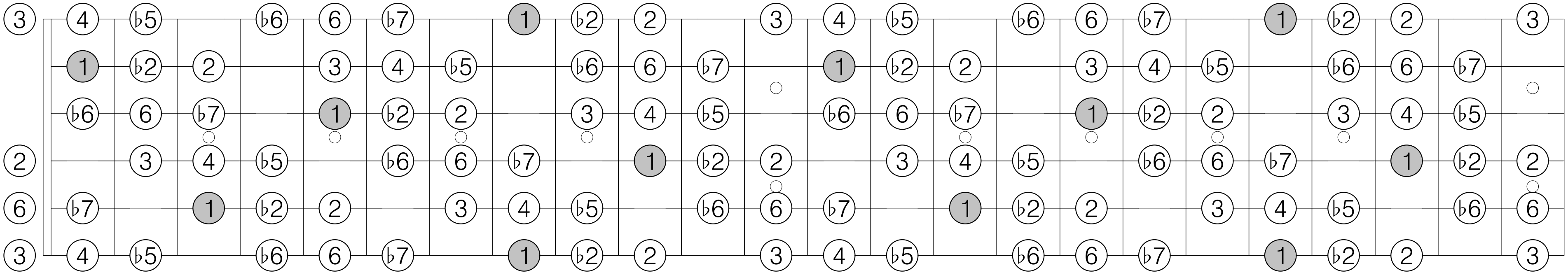

C transposition 2 of Mode 3 [1, 1, 2]

1 ♭2 ♭3 3 4 5 ♭6 6 7 1 ♭2 ♭3 3 4 5 ♭6 6 7

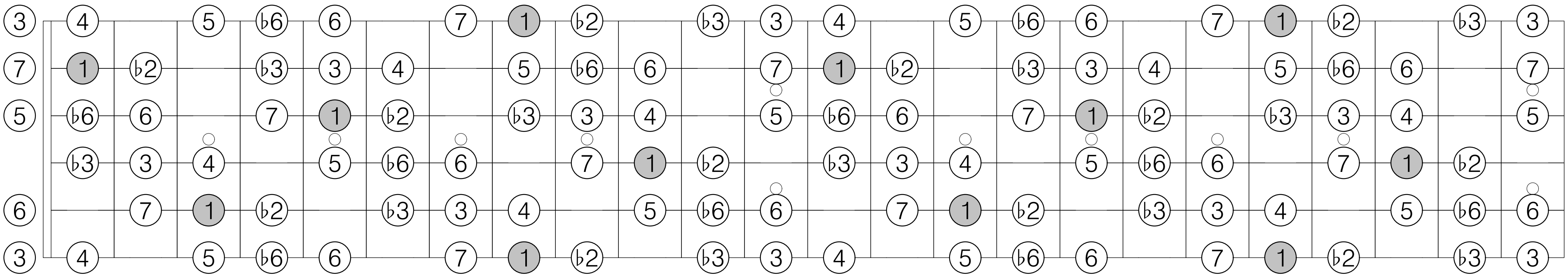

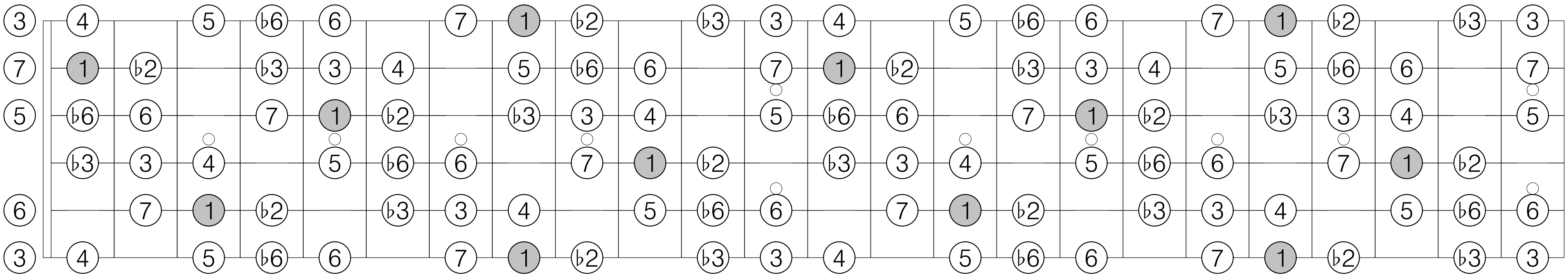

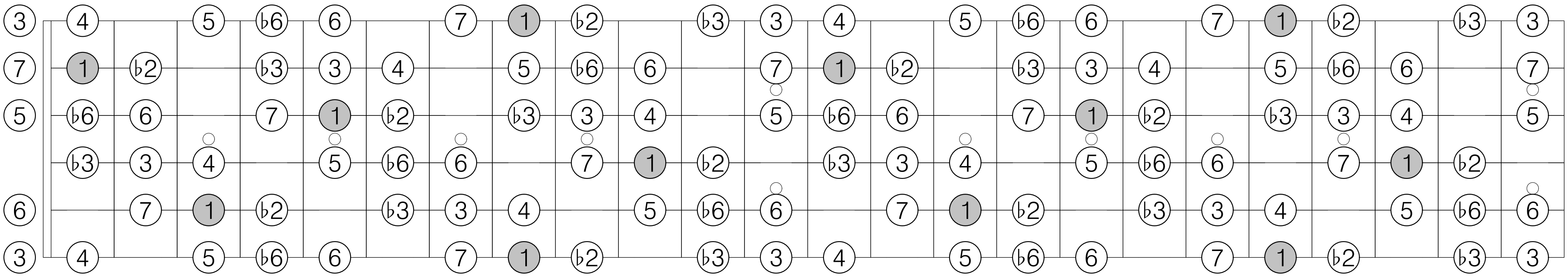

C transposition 3 of Mode 3 [1, 1, 2]

1 2 ♭3 3 ♭5 5 ♭6 ♭7 7 1 2 ♭3 3 ♭5 5 ♭6 ♭7 7

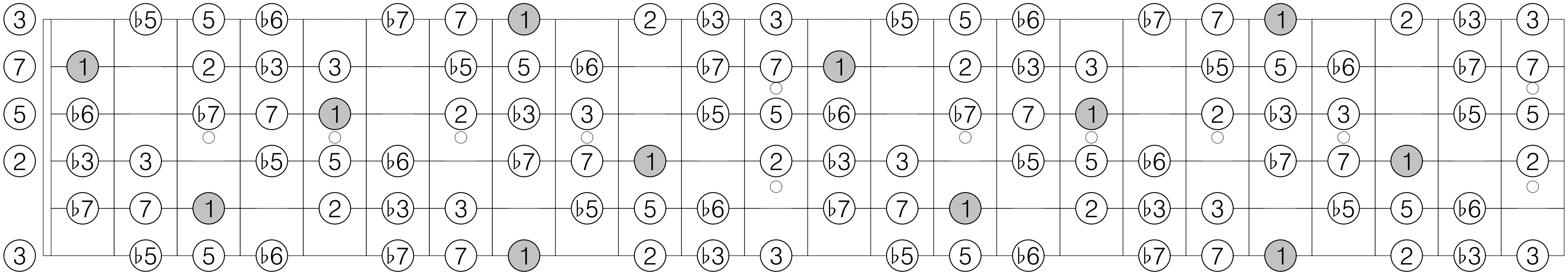

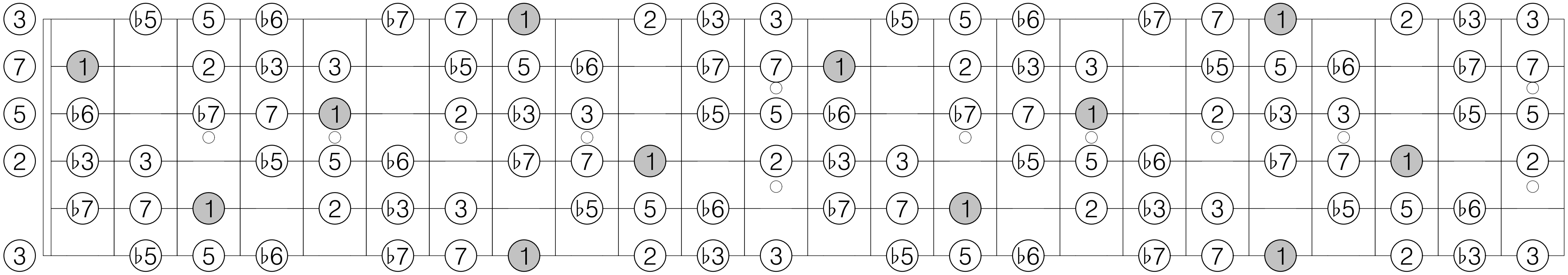

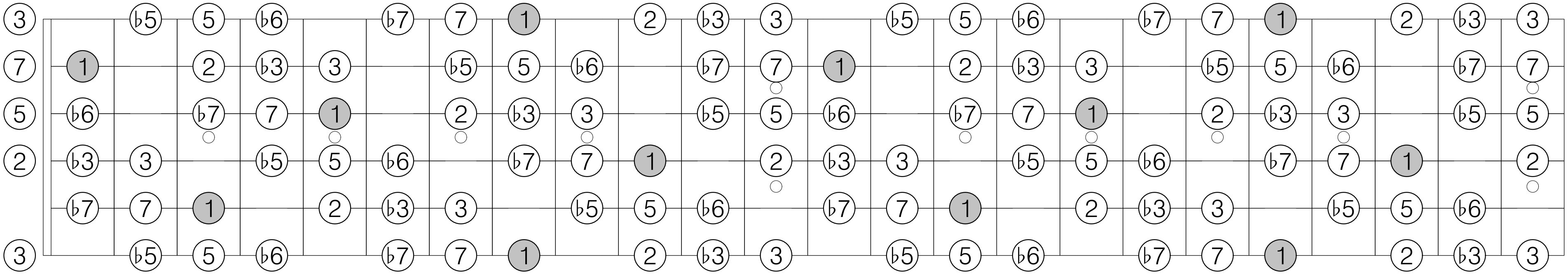

C transposition 1 of Mode 4 [1, 1, 3, 1]

1 ♭2 2 4 ♭5 5 ♭6 7 1 ♭2 2 4 ♭5 5 ♭6 7

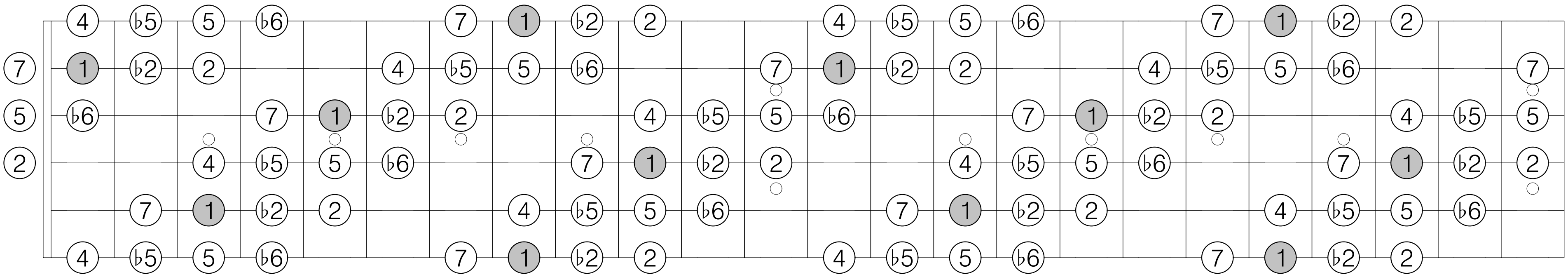

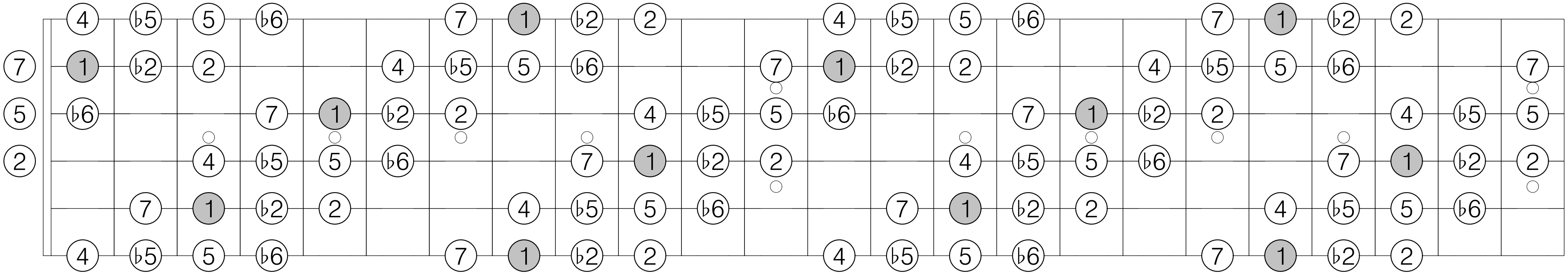

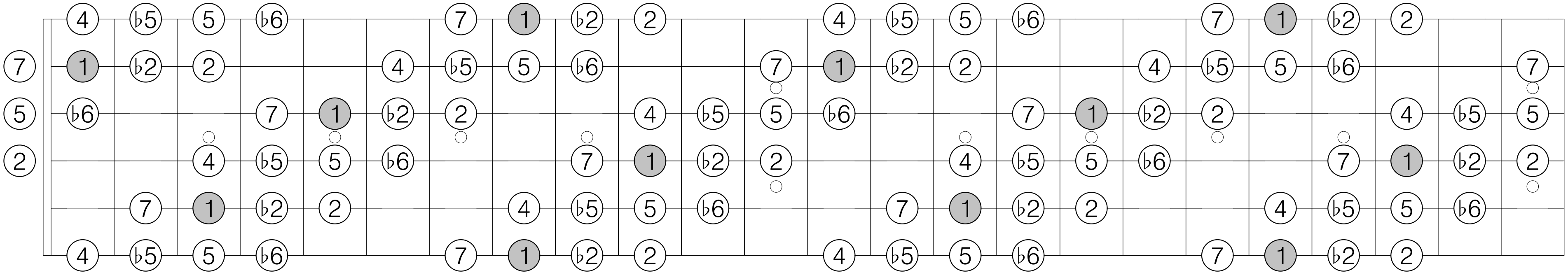

C transposition 2 of Mode 4 [1, 1, 3, 1]

1 ♭2 3 4 ♭5 5 ♭7 7 1 ♭2 3 4 ♭5 5 ♭7 7

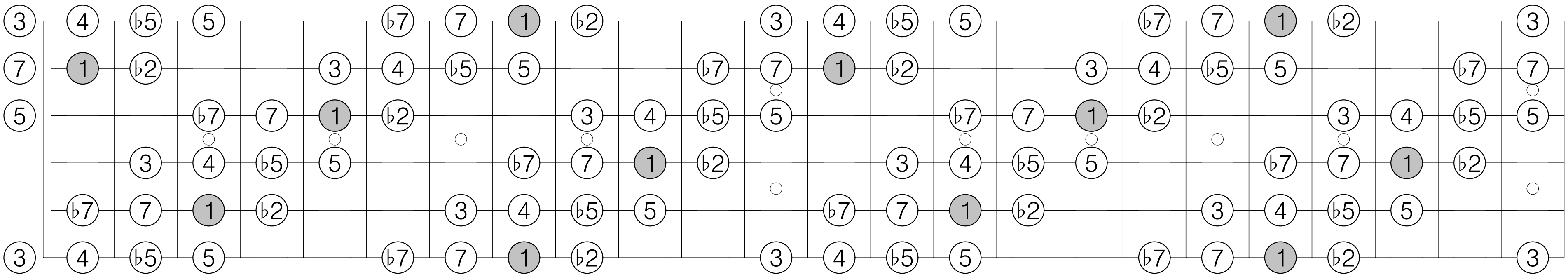

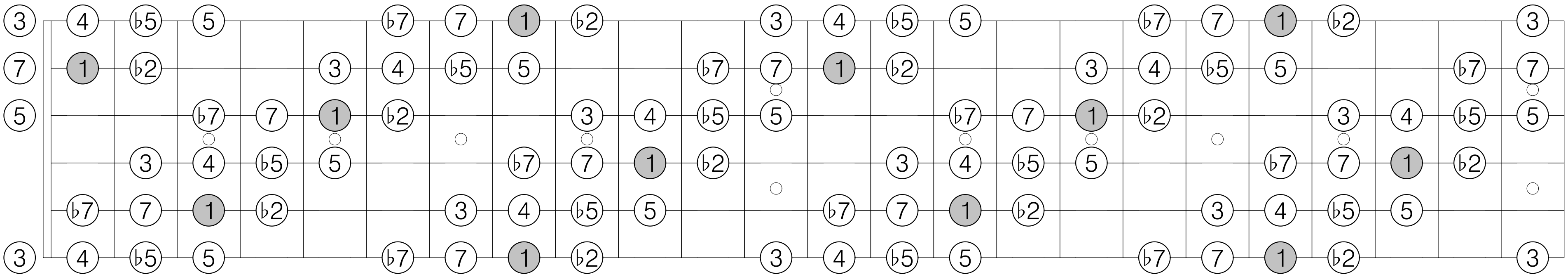

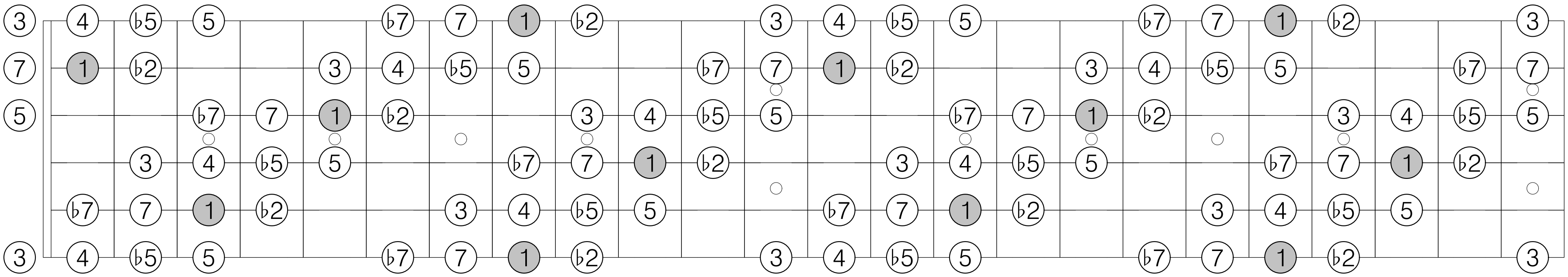

C transposition 3 of Mode 4 [1, 1, 3, 1]

1 ♭3 3 4 ♭5 6 ♭7 7 1 ♭3 3 4 ♭5 6 ♭7 7

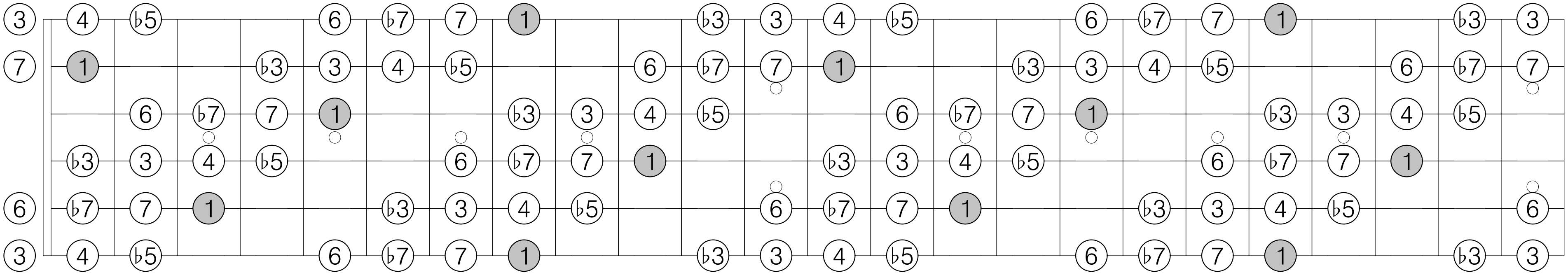

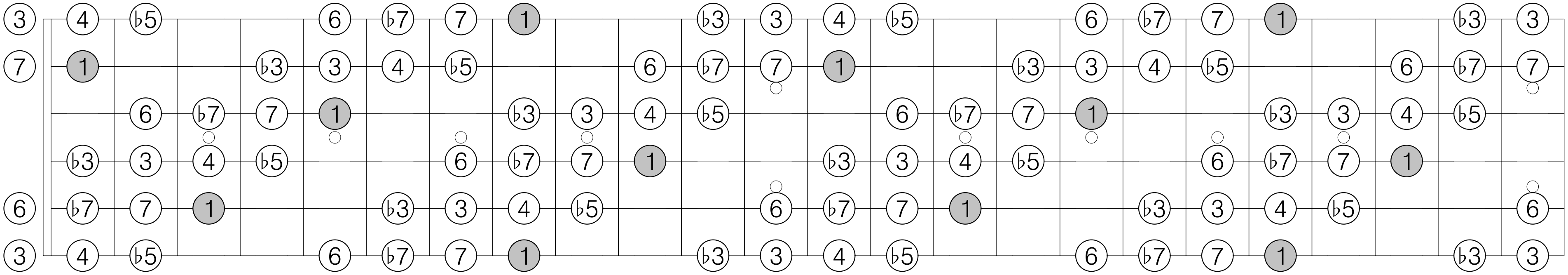

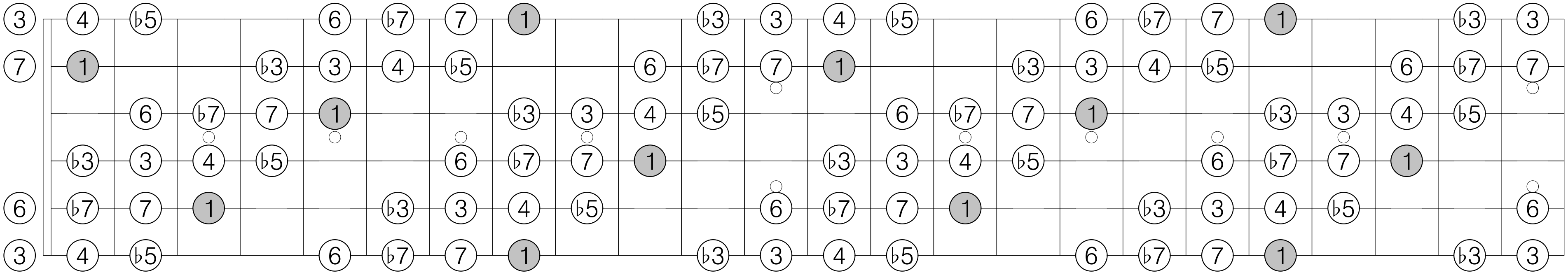

C transposition 4 of Mode 4 [1, 1, 3, 1]

1 ♭2 2 ♭3 ♭5 5 ♭6 6 1 ♭2 2 ♭3 ♭5 5 ♭6 6

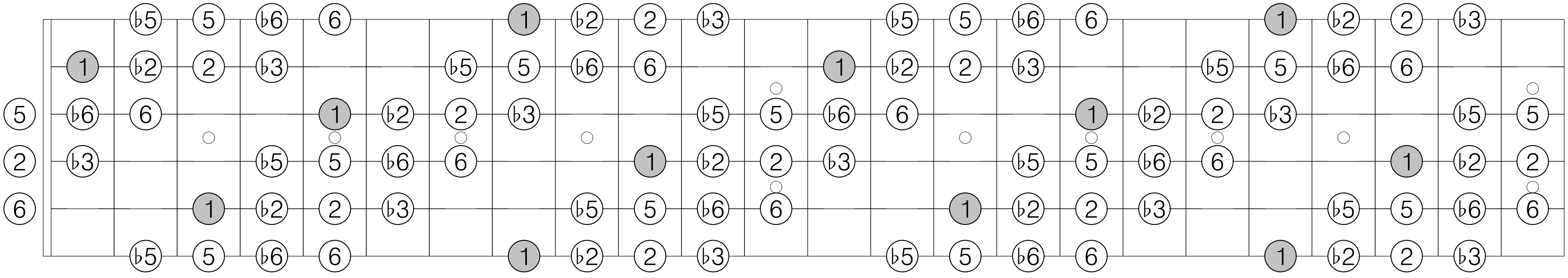

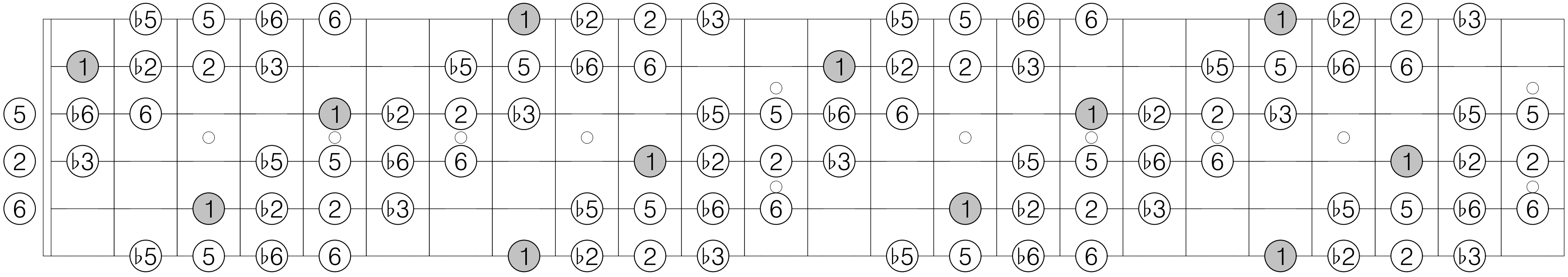

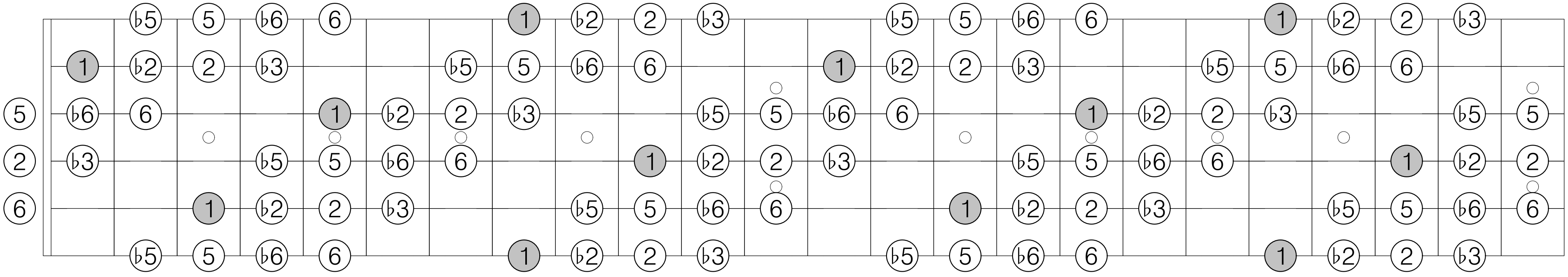

C transposition 1 of Mode 5 [1, 4, 1]

1 ♭2 4 ♭5 5 7 1 ♭2 4 ♭5 5 7

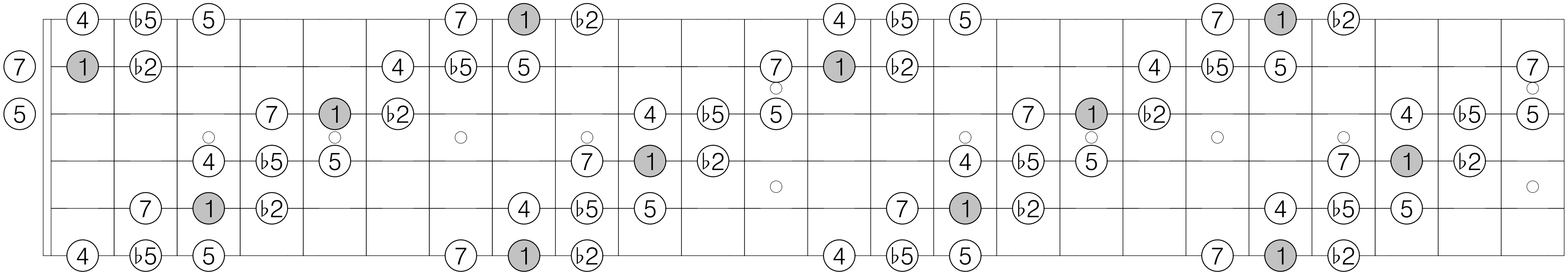

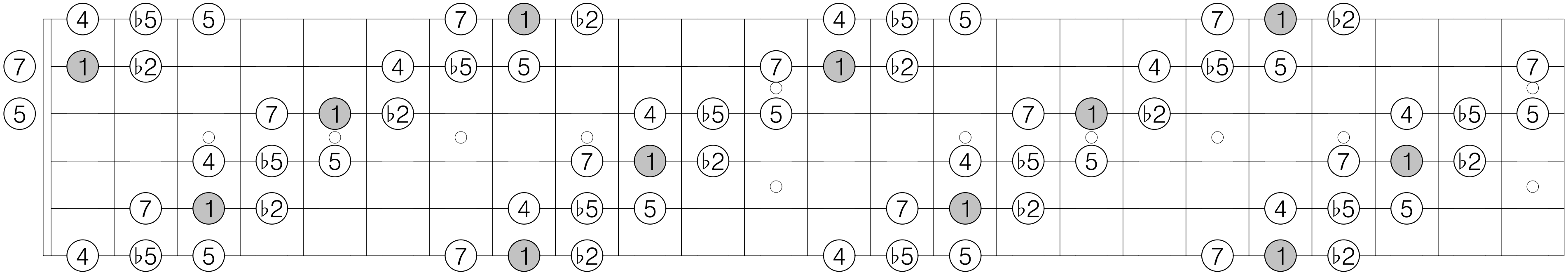

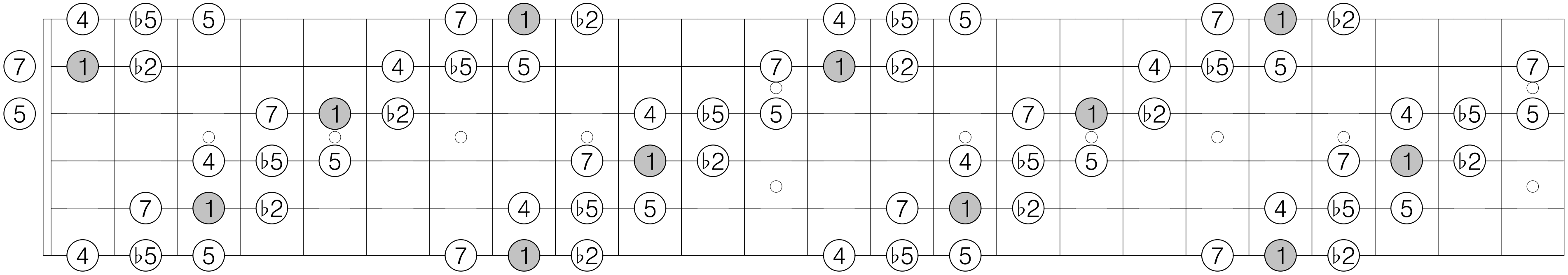

C transposition 2 of Mode 5 [1, 4, 1]

1 3 4 ♭5 ♭7 7 1 3 4 ♭5 ♭7 7

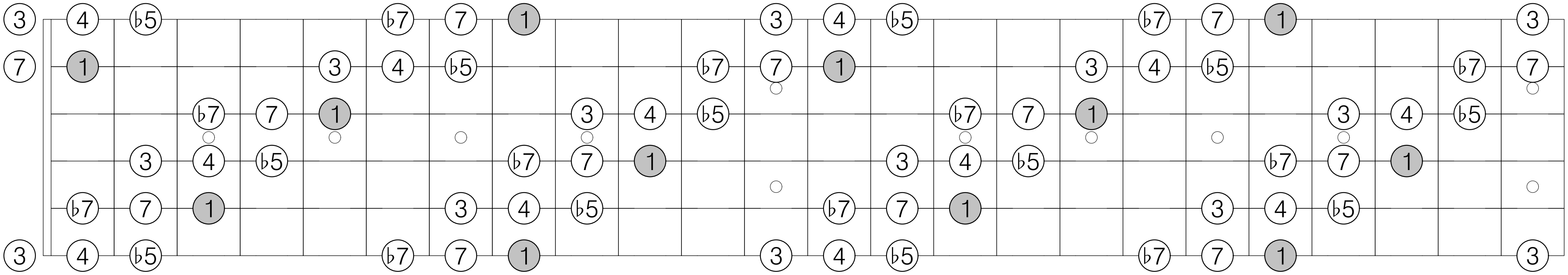

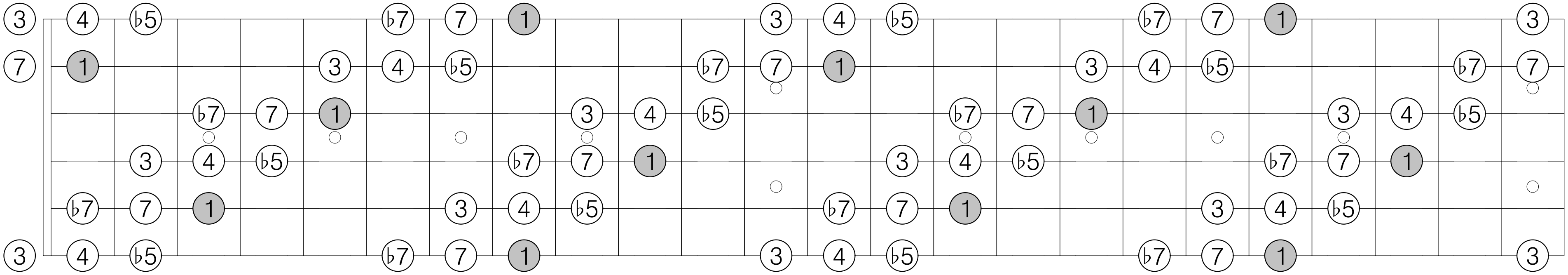

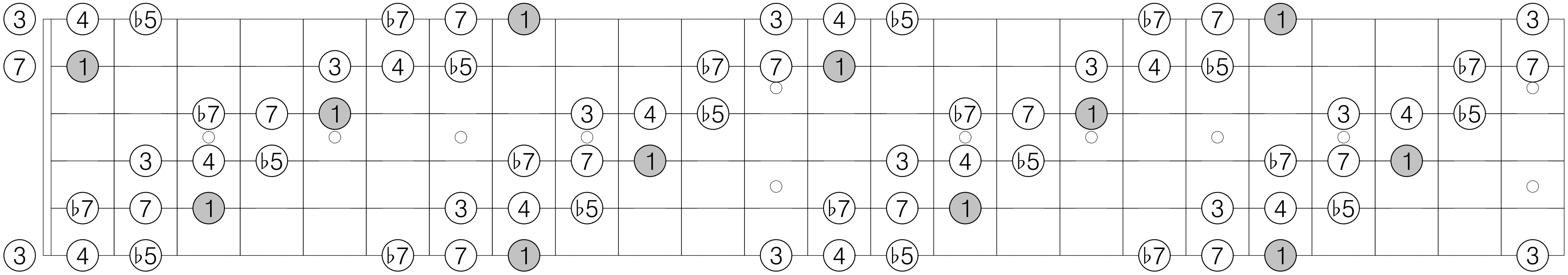

C transposition 3 of Mode 5 [1, 4, 1]

1 ♭2 2 ♭5 5 ♭6 1 ♭2 2 ♭5 5 ♭6

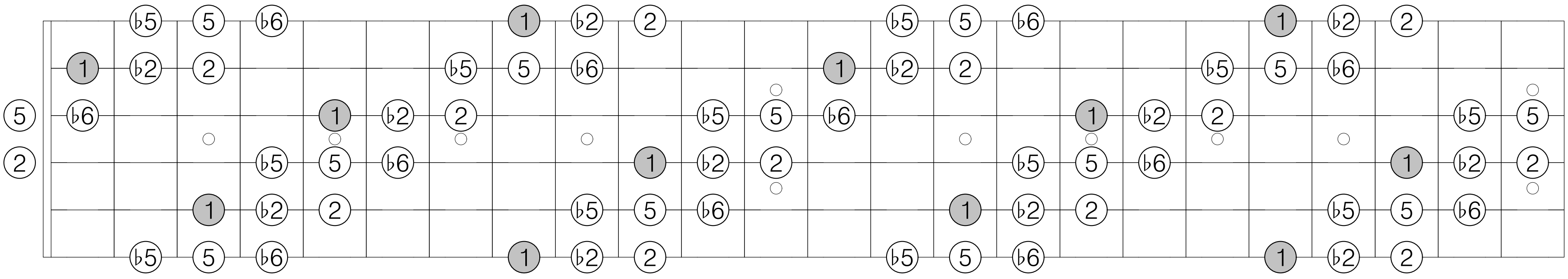

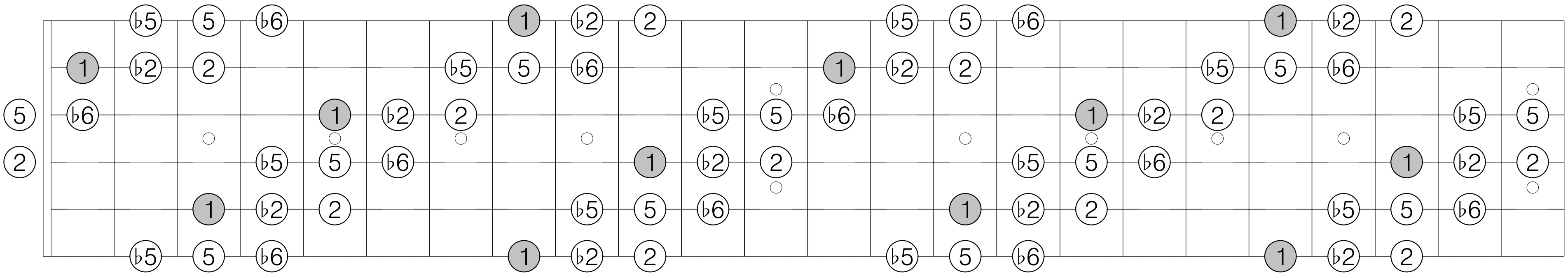

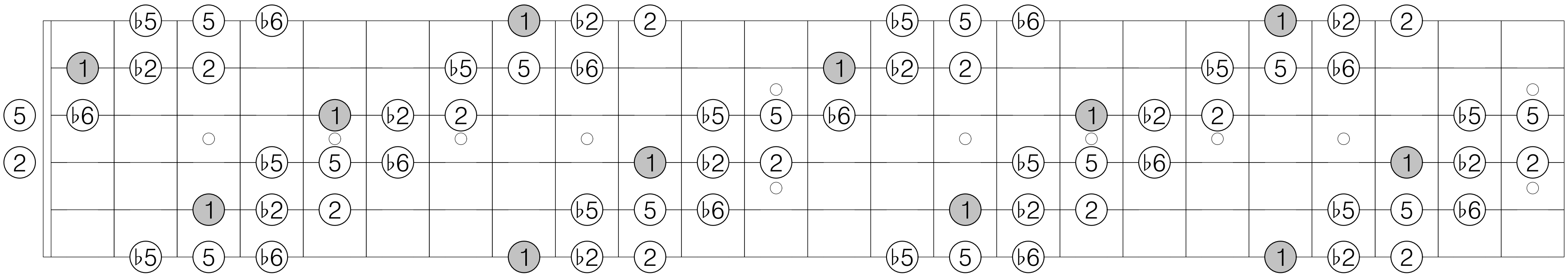

C transposition 1 of Mode 6 [1, 1, 2, 2]

1 ♭2 2 3 ♭5 5 ♭6 ♭7 1 ♭2 2 3 ♭5 5 ♭6 ♭7

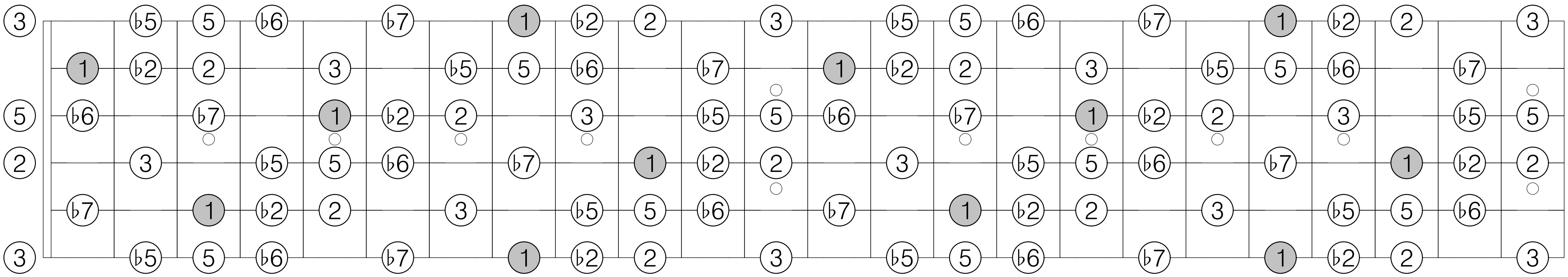

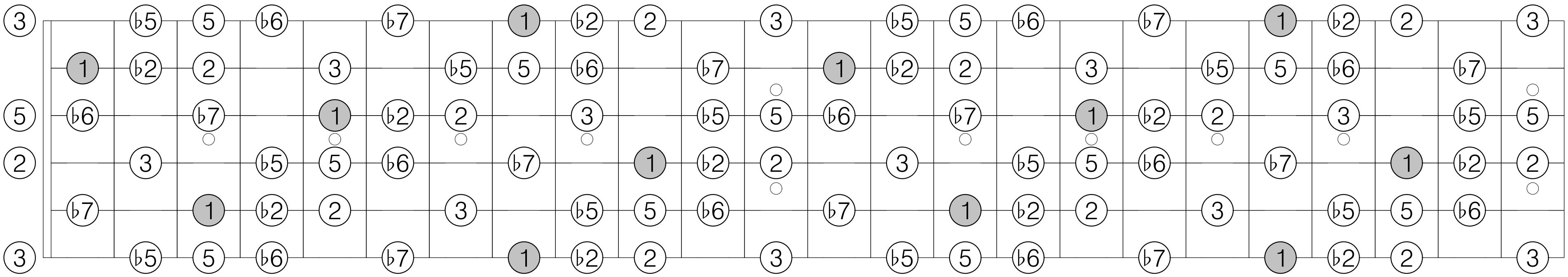

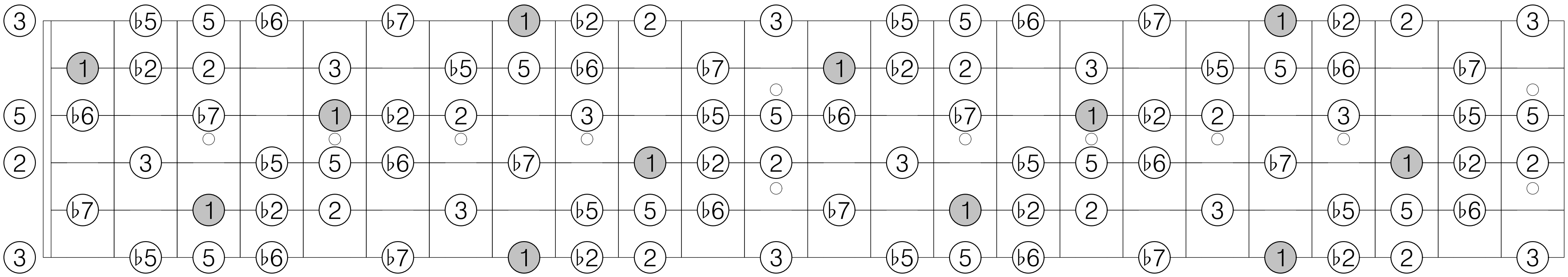

C transposition 2 of Mode 6 [1, 1, 2, 2]

1 ♭2 ♭3 4 ♭5 5 6 7 1 ♭2 ♭3 4 ♭5 5 6 7

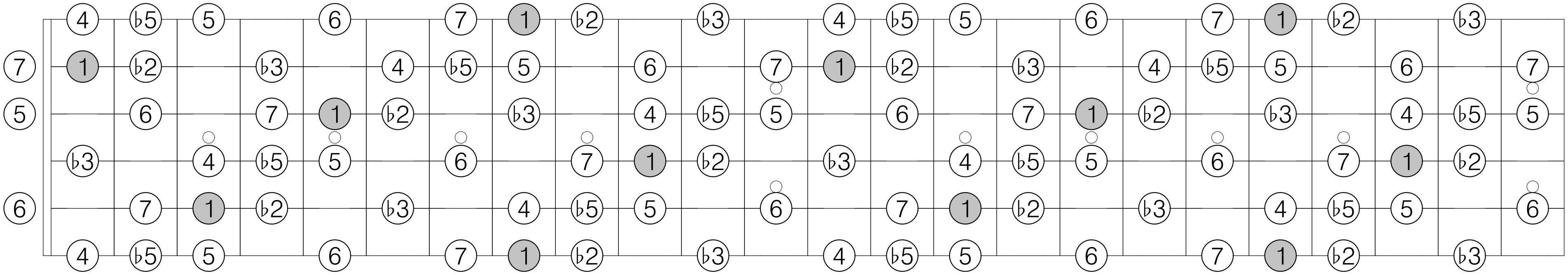

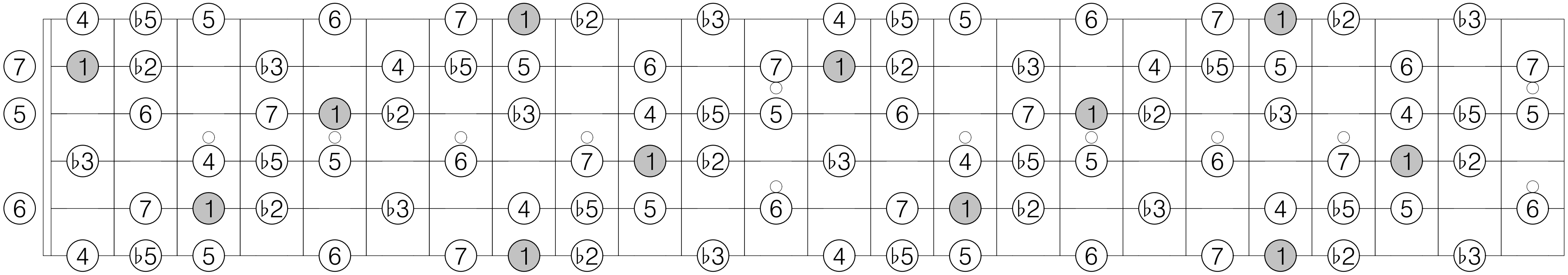

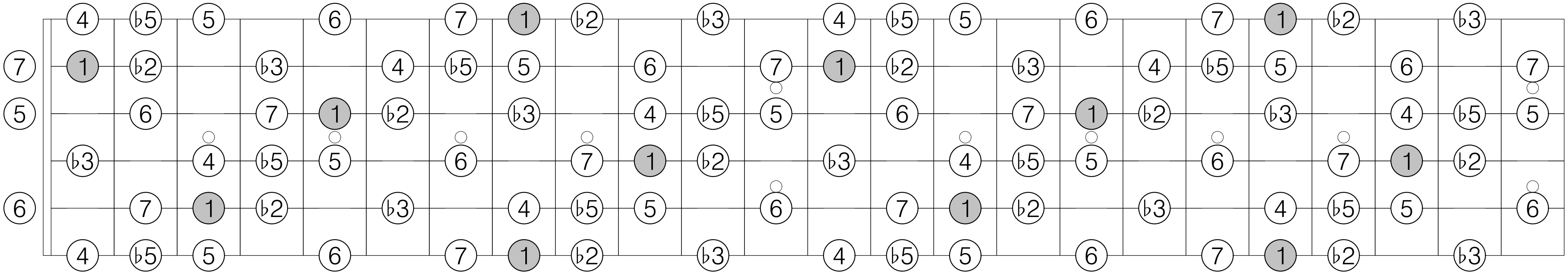

C transposition 3 of Mode 6 [1, 1, 2, 2]

1 2 3 4 ♭5 ♭6 ♭7 7 1 2 3 4 ♭5 ♭6 ♭7 7

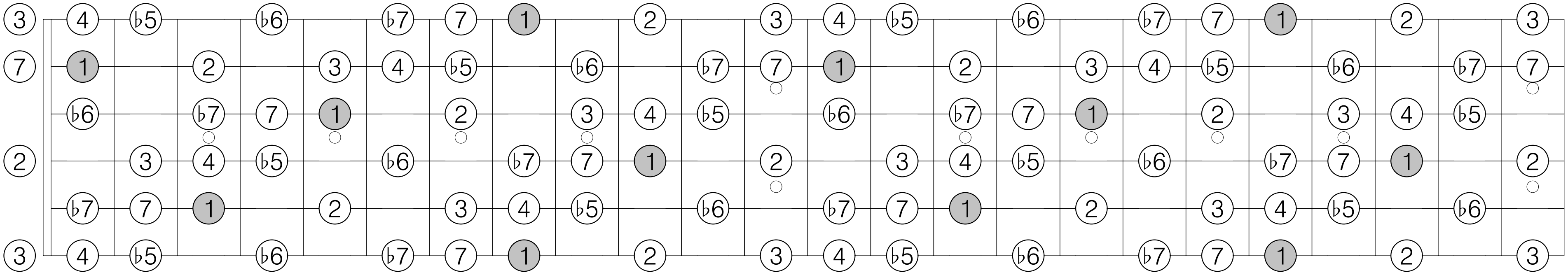

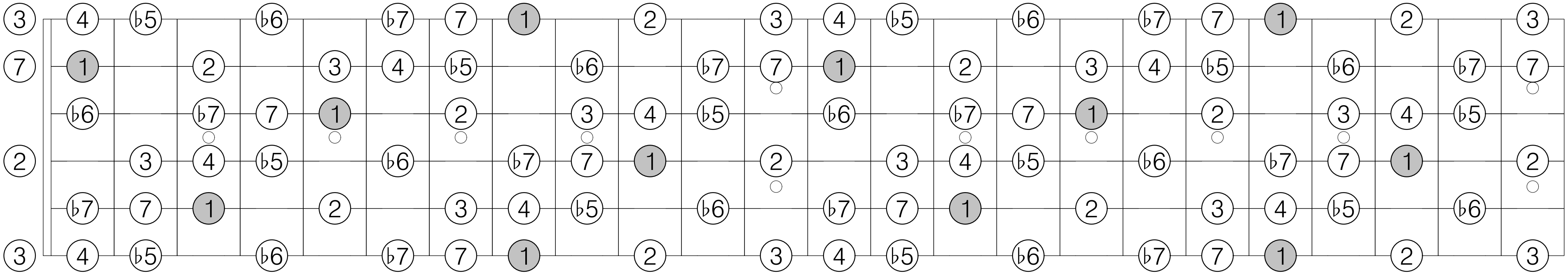

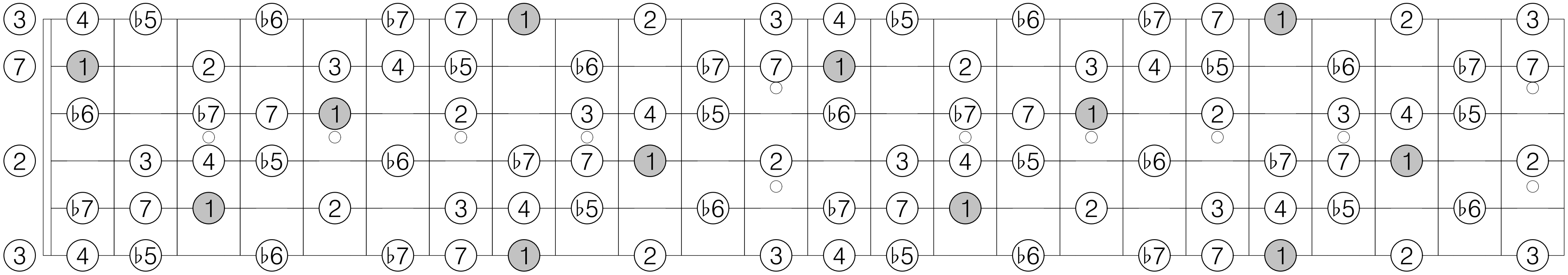

C transposition 4 of Mode 6 [1, 1, 2, 2]

1 2 ♭3 3 ♭5 ♭6 6 ♭7 1 2 ♭3 3 ♭5 ♭6 6 ♭7

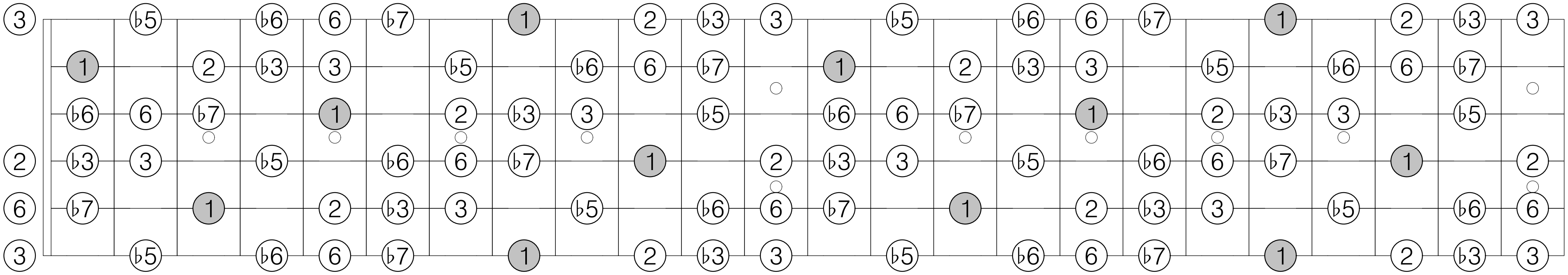

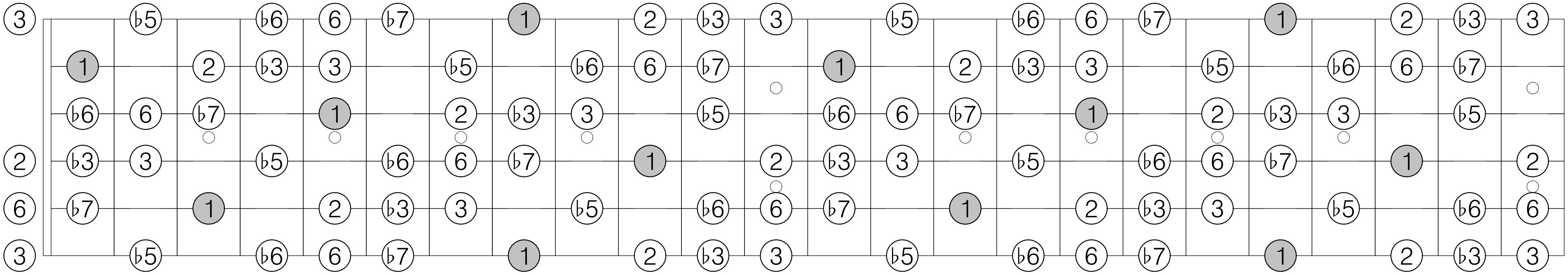

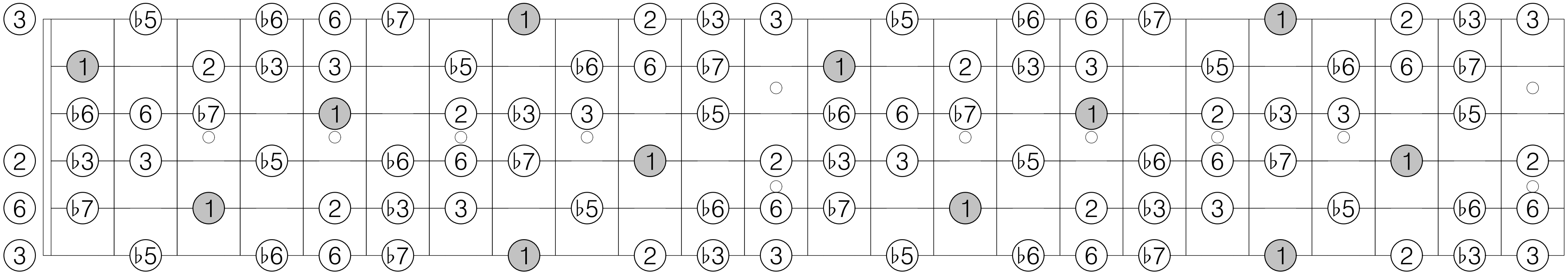

C transposition 1 of Mode 7 [1, 1, 1, 2, 1]

1 ♭2 2 ♭3 4 ♭5 5 ♭6 6 7 1 ♭2 2 ♭3 4 ♭5 5 ♭6 6 7

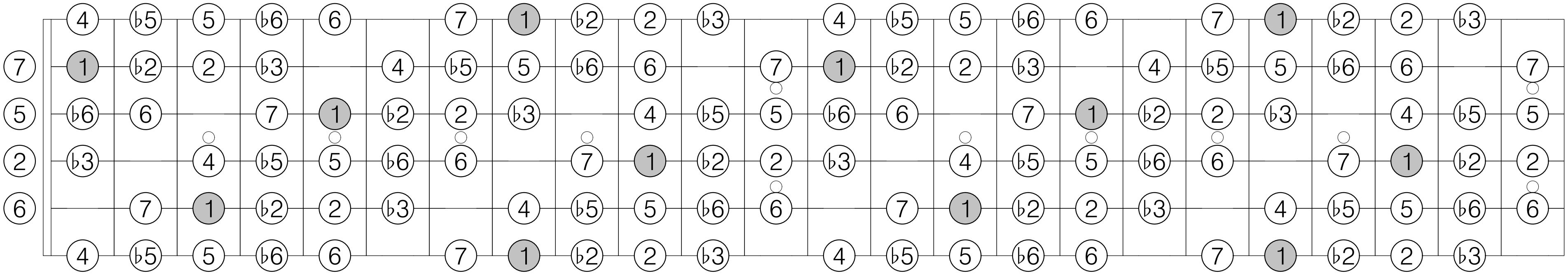

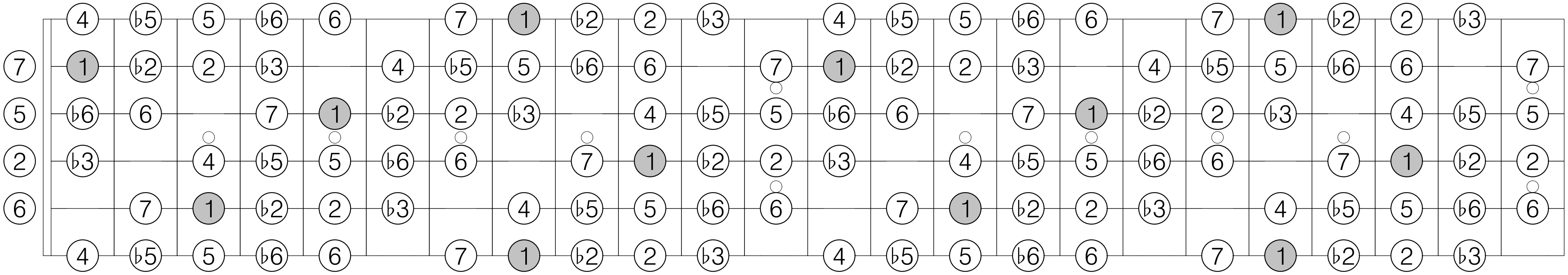

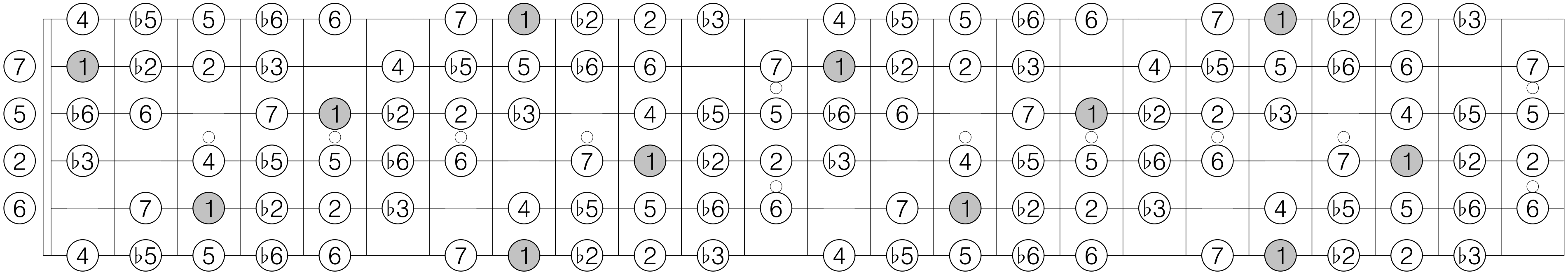

C transposition 2 of Mode 7 [1, 1, 1, 2, 1]

1 ♭2 2 3 4 ♭5 5 ♭6 ♭7 7 1 ♭2 2 3 4 ♭5 5 ♭6 ♭7 7

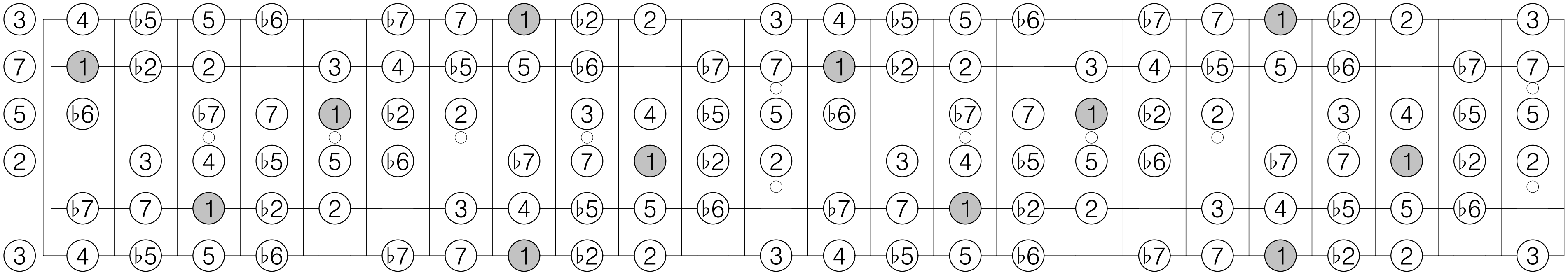

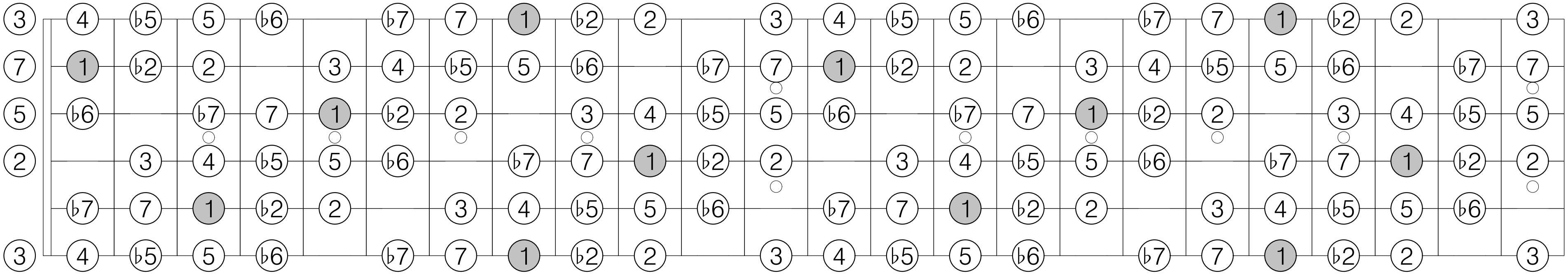

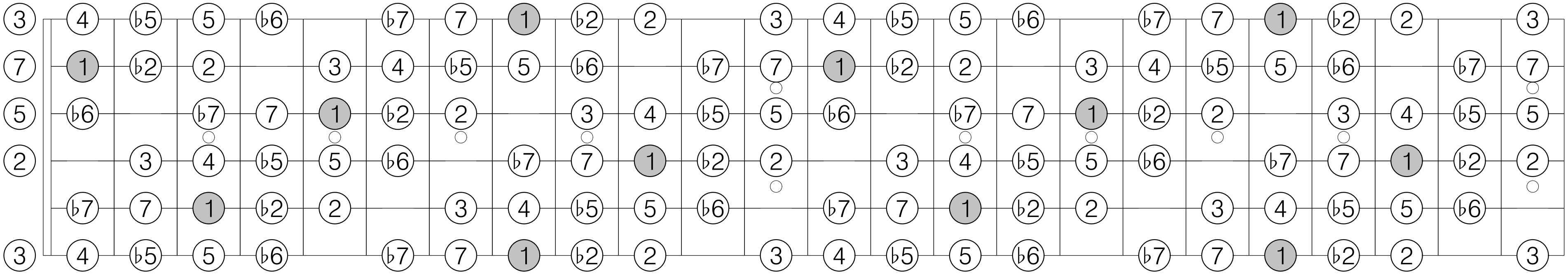

C transposition 3 of Mode 7 [1, 1, 1, 2, 1]

1 ♭2 ♭3 3 4 ♭5 5 6 ♭7 7 1 ♭2 ♭3 3 4 ♭5 5 6 ♭7 7

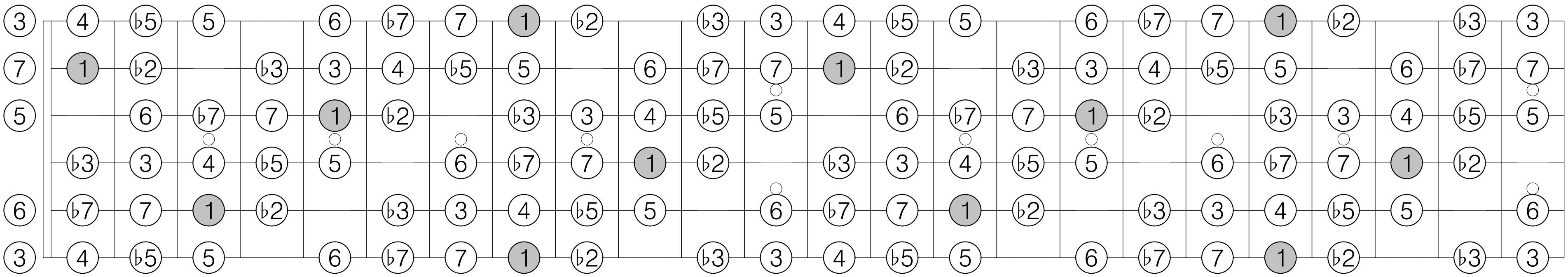

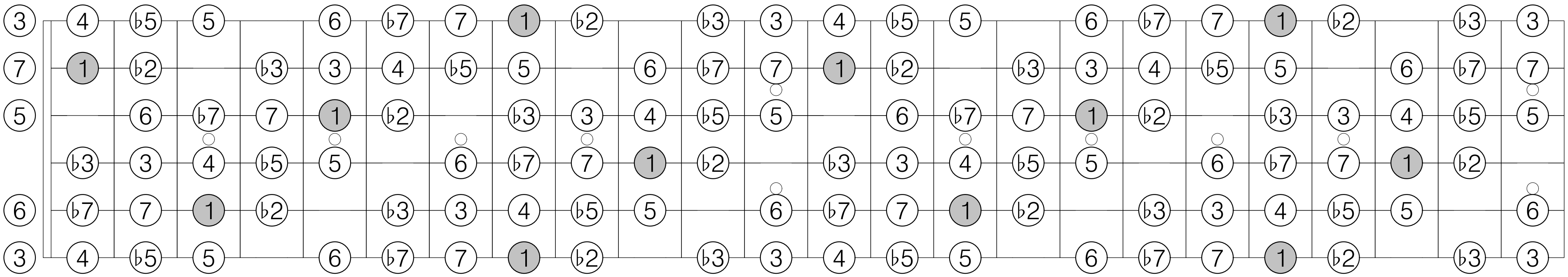

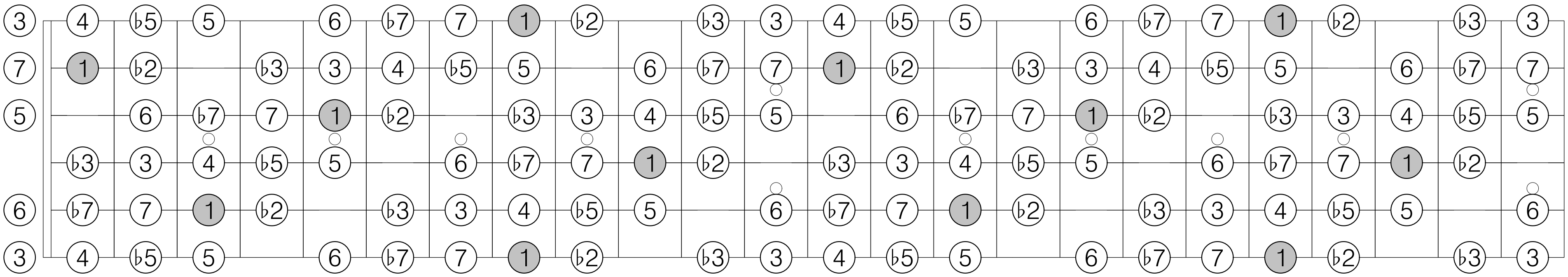

C transposition 4 of Mode 7 [1, 1, 1, 2, 1]

1 2 ♭3 3 4 ♭5 ♭6 6 ♭7 7 1 2 ♭3 3 4 ♭5 ♭6 6 ♭7 7

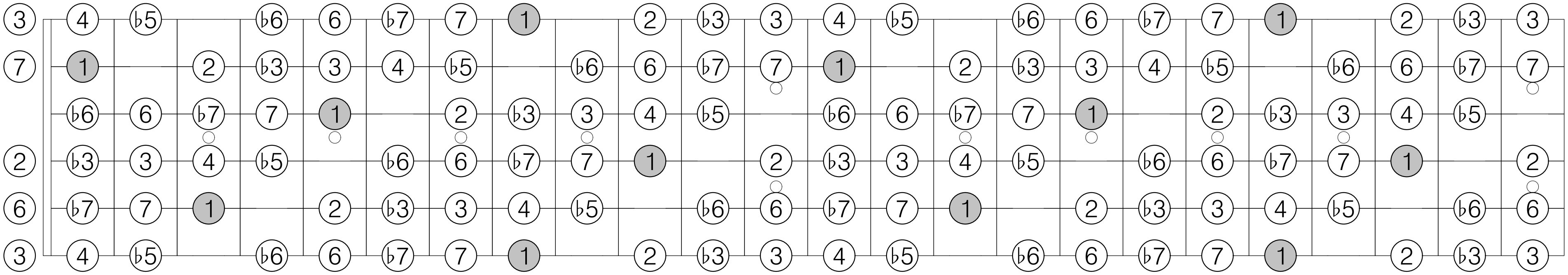

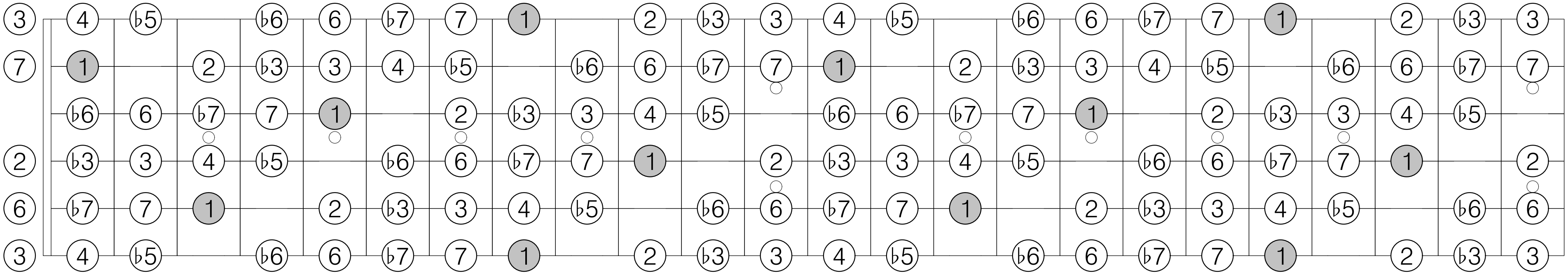

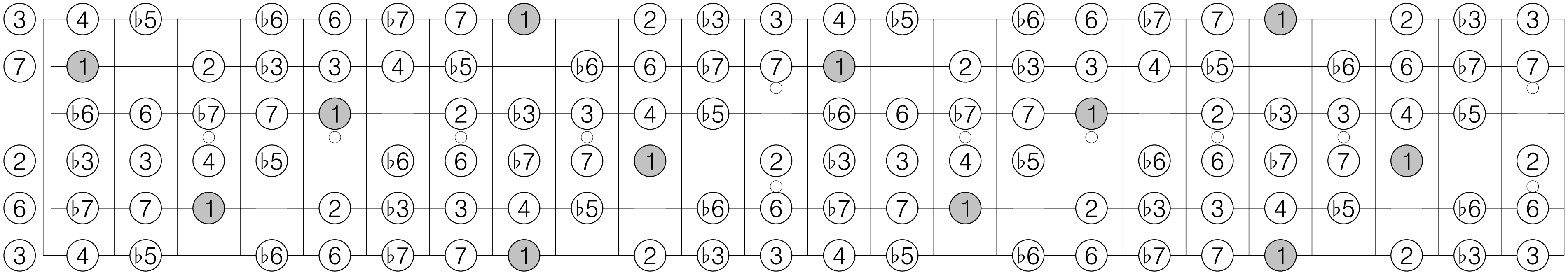

C transposition 5 of Mode 7 [1, 1, 1, 2, 1]

1 ♭2 2 ♭3 3 ♭5 5 ♭6 6 ♭7 1 ♭2 2 ♭3 3 ♭5 5 ♭6 6 ♭7

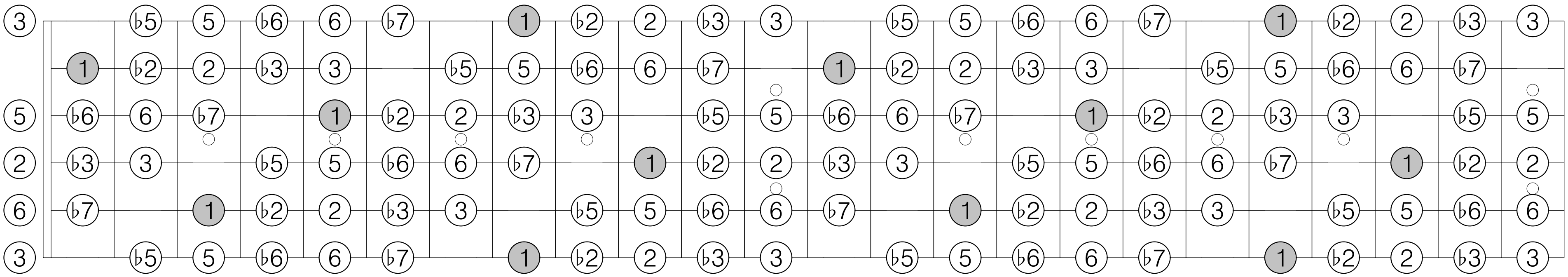

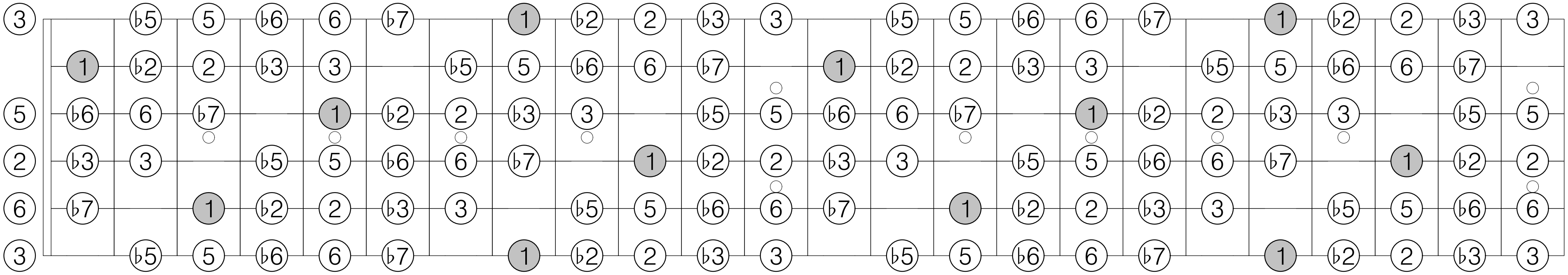

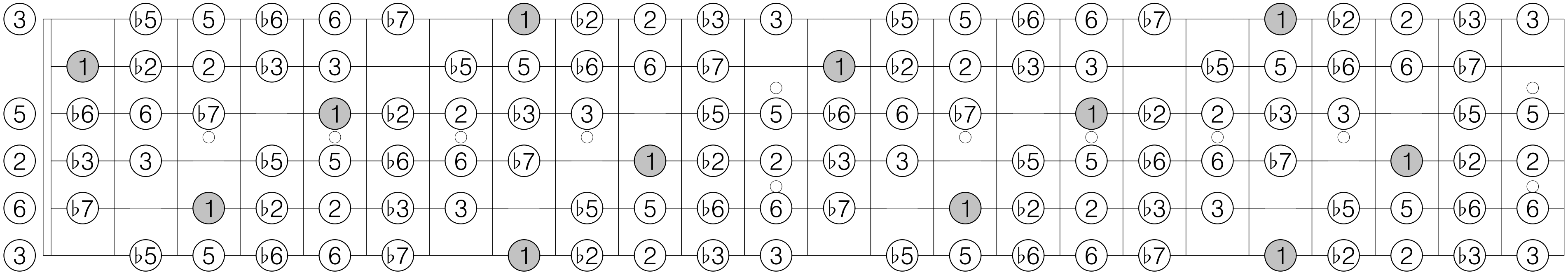

C# transposition 1 of Mode 1 [2]

1 2 3 ♭5 ♭6 ♭7 1 2 3 ♭5 ♭6 ♭7

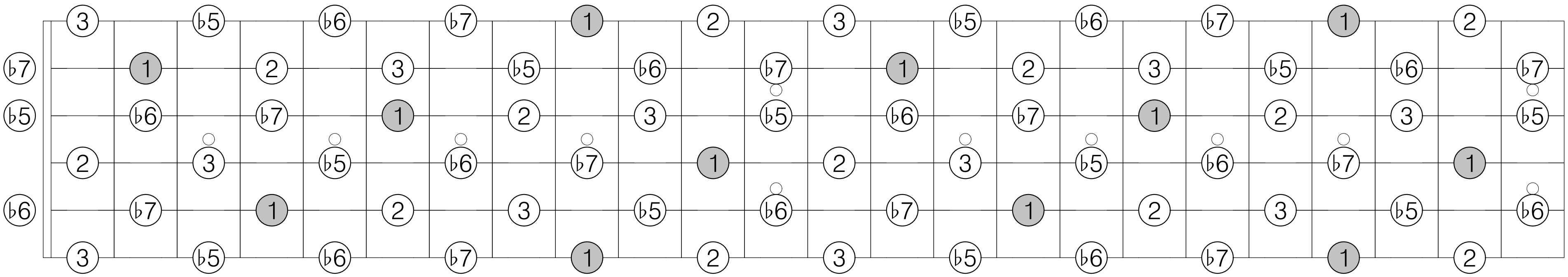

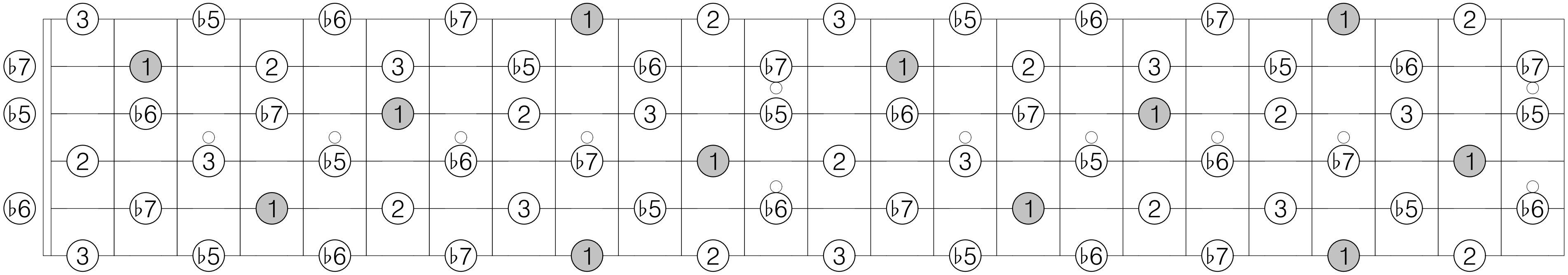

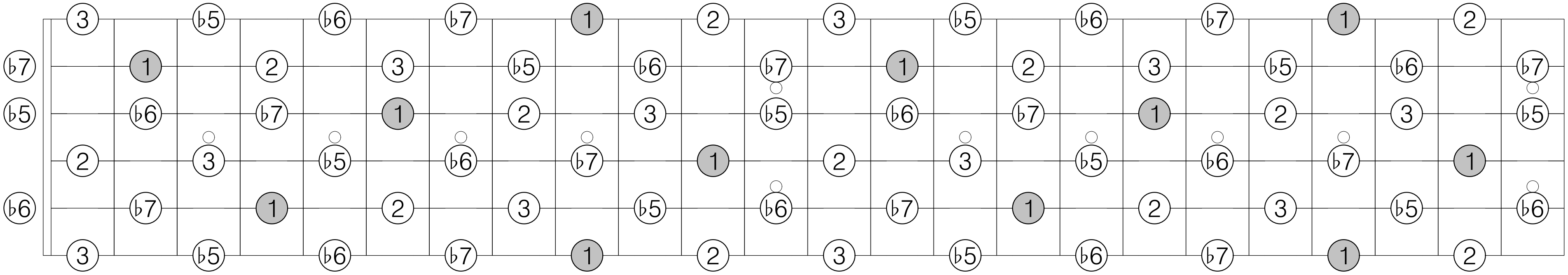

C# transposition 1 of Mode 2 [1, 2]

1 ♭2 ♭3 3 ♭5 5 6 ♭7 1 ♭2 ♭3 3 ♭5 5 6 ♭7

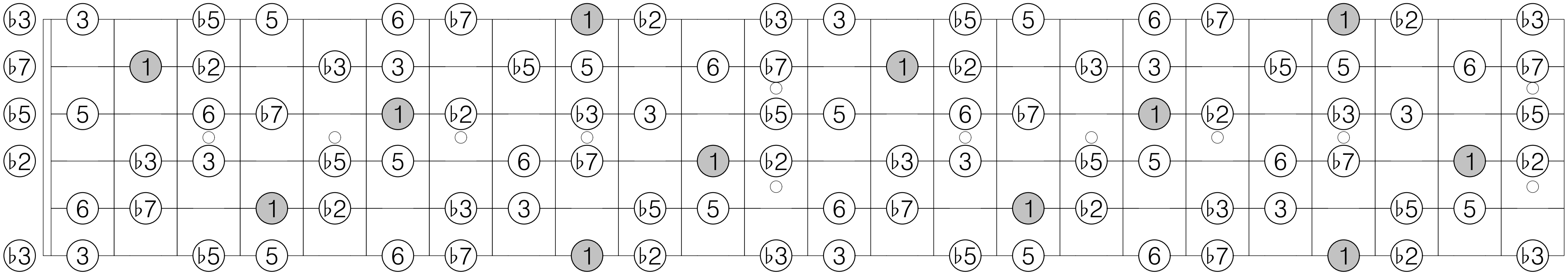

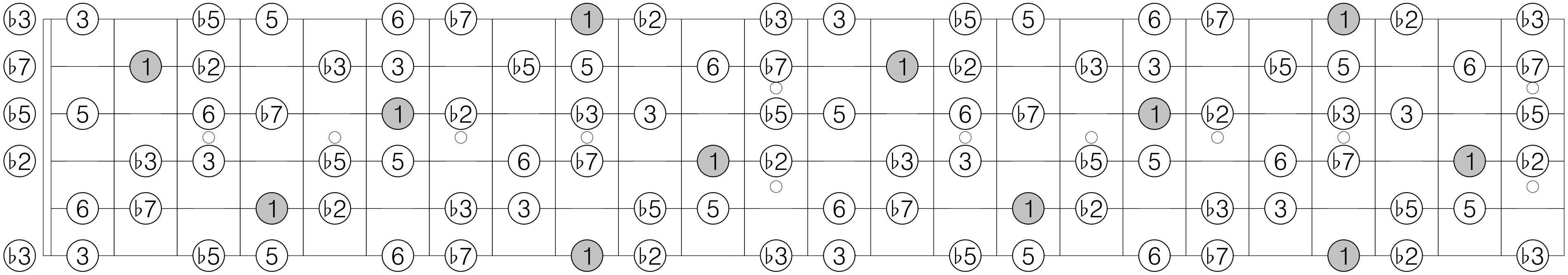

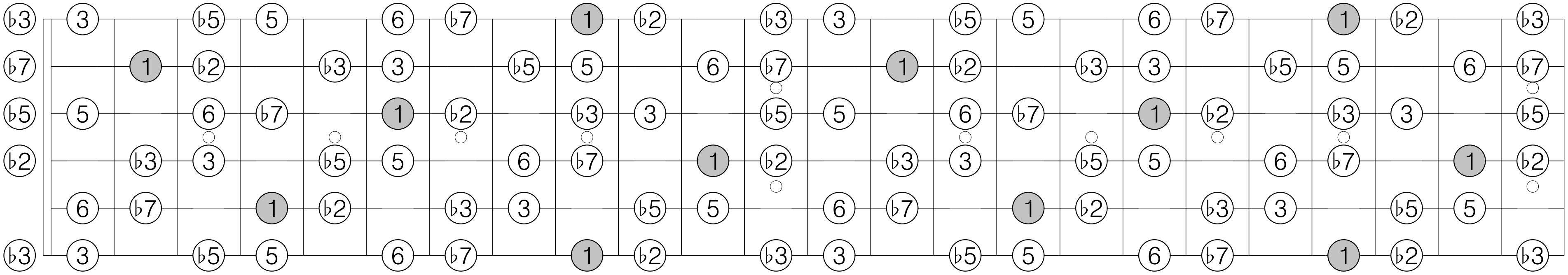

C# transposition 2 of Mode 2 [1, 2]

1 2 ♭3 4 ♭5 ♭6 6 7 1 2 ♭3 4 ♭5 ♭6 6 7

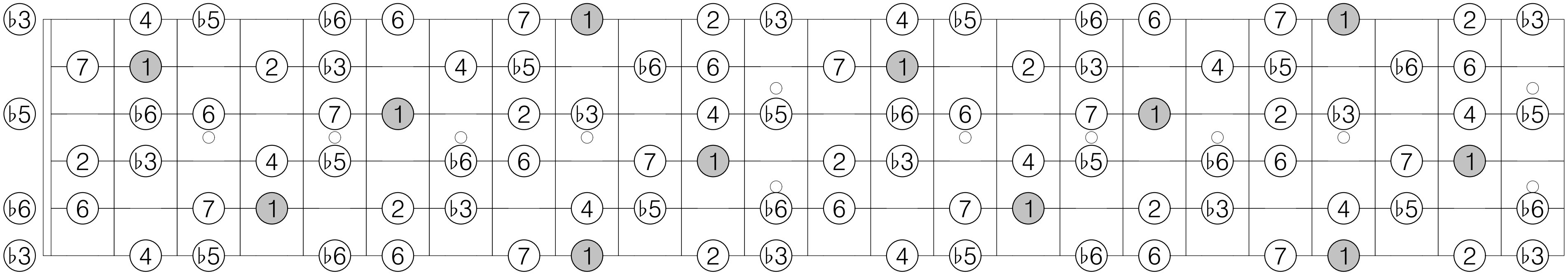

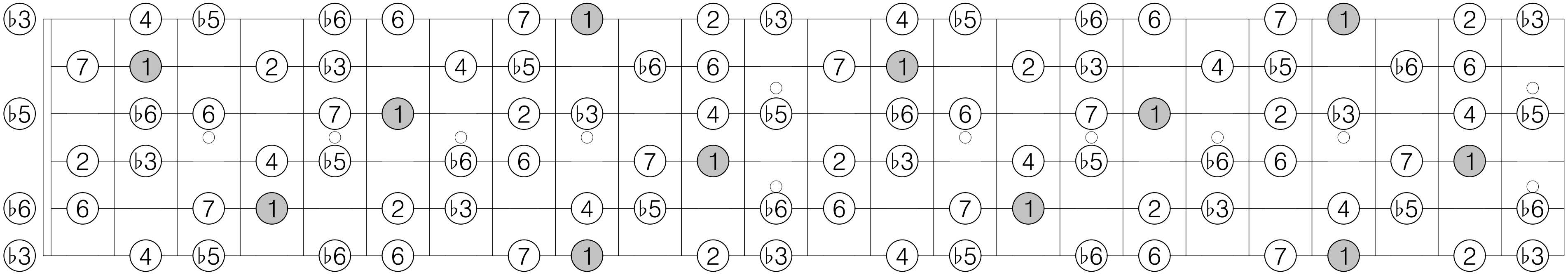

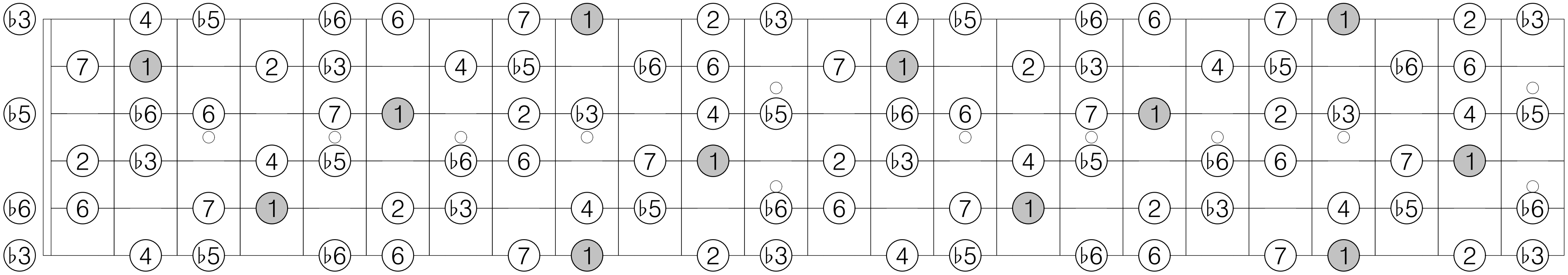

C# transposition 1 of Mode 3 [1, 1, 2]

1 ♭2 2 3 4 ♭5 ♭6 6 ♭7 1 ♭2 2 3 4 ♭5 ♭6 6 ♭7

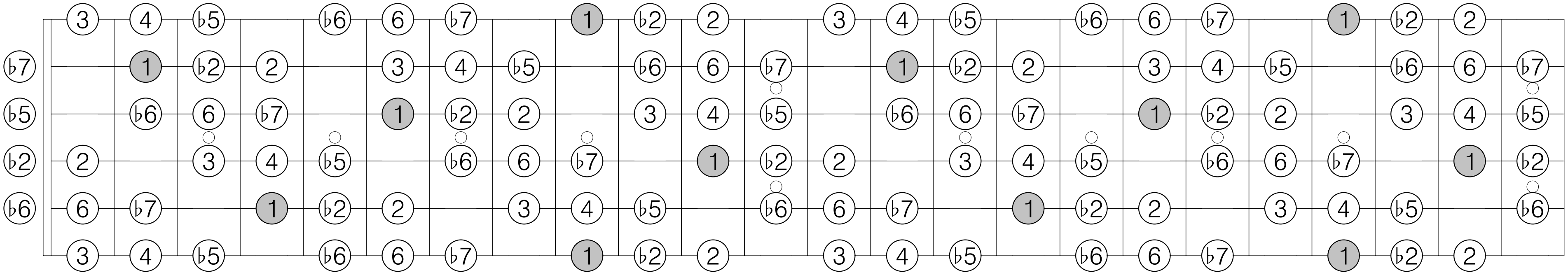

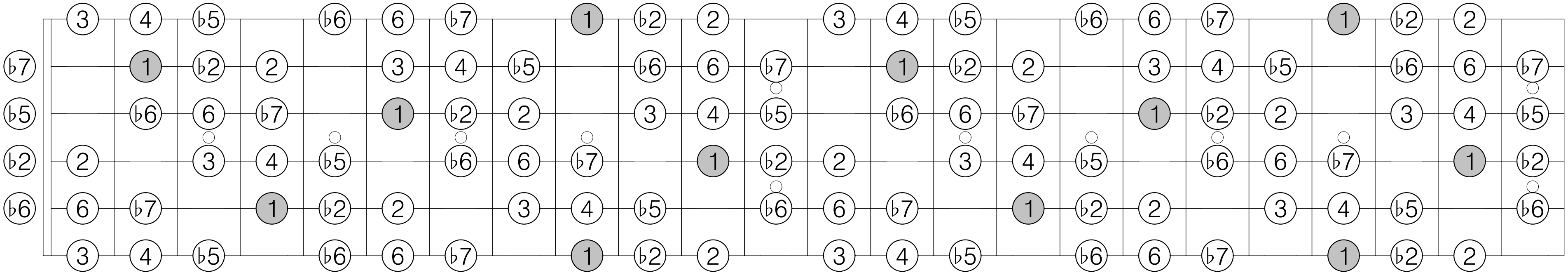

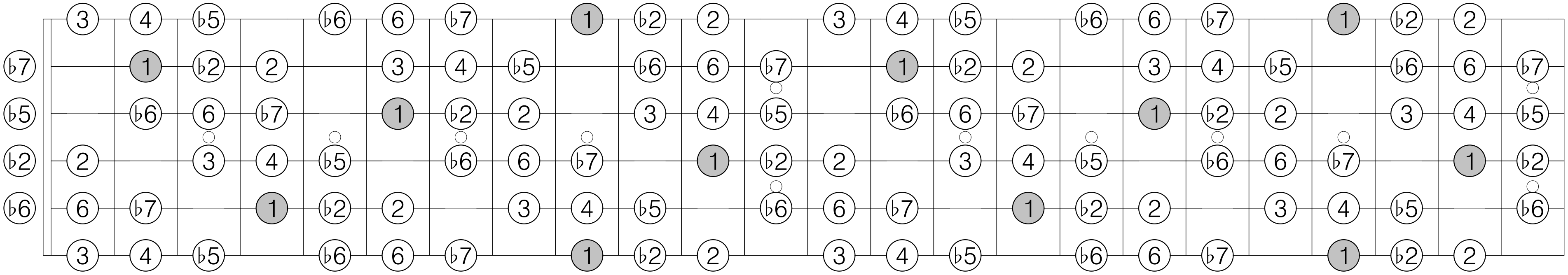

C# transposition 2 of Mode 3 [1, 1, 2]

1 ♭2 ♭3 3 4 5 ♭6 6 7 1 ♭2 ♭3 3 4 5 ♭6 6 7

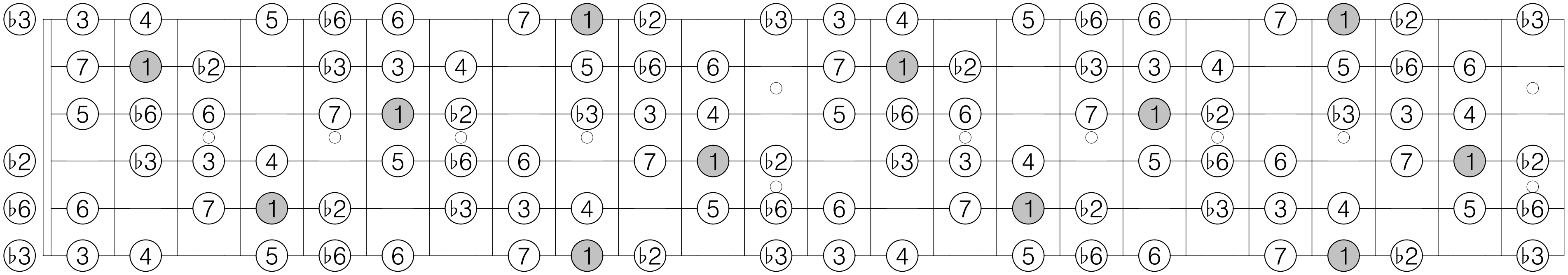

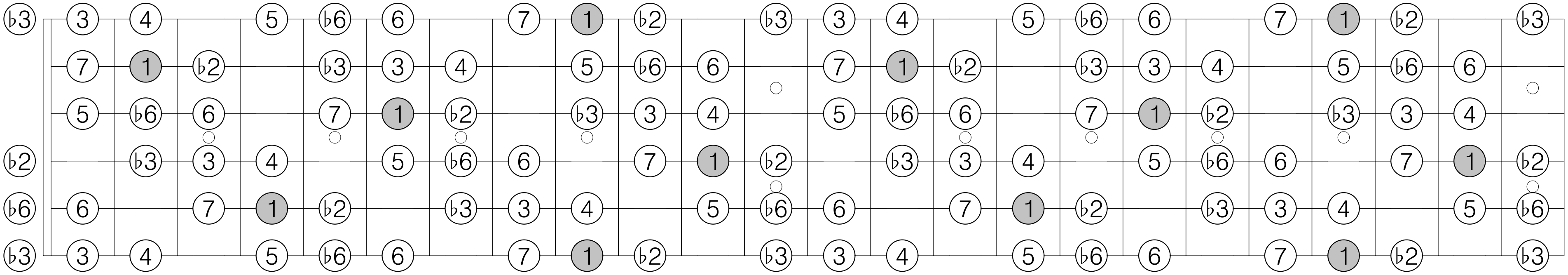

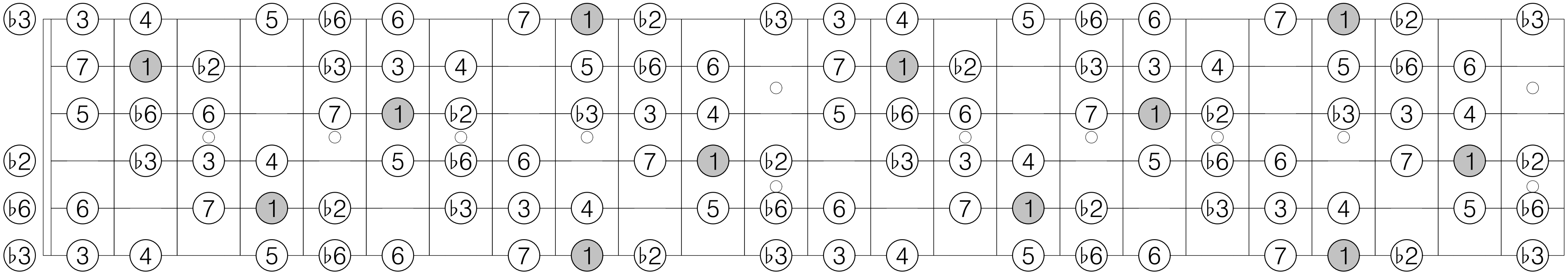

C# transposition 3 of Mode 3 [1, 1, 2]

1 2 ♭3 3 ♭5 5 ♭6 ♭7 7 1 2 ♭3 3 ♭5 5 ♭6 ♭7 7

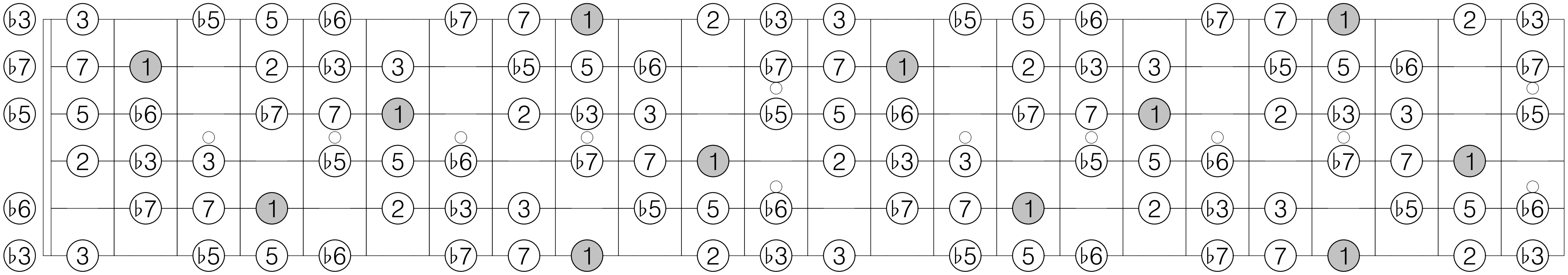

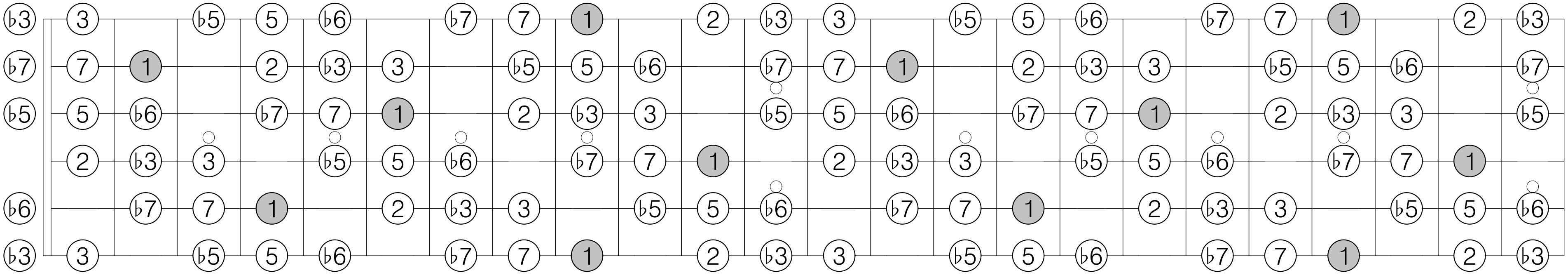

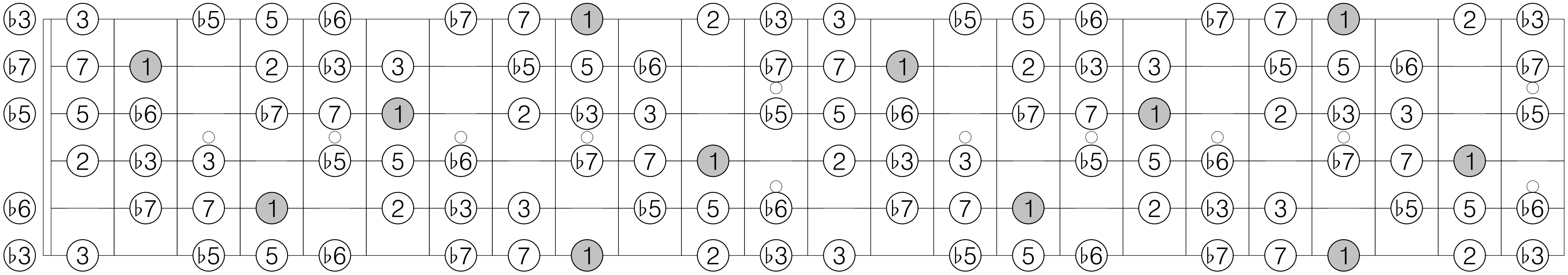

C# transposition 1 of Mode 4 [1, 1, 3, 1]

1 ♭2 2 4 ♭5 5 ♭6 7 1 ♭2 2 4 ♭5 5 ♭6 7

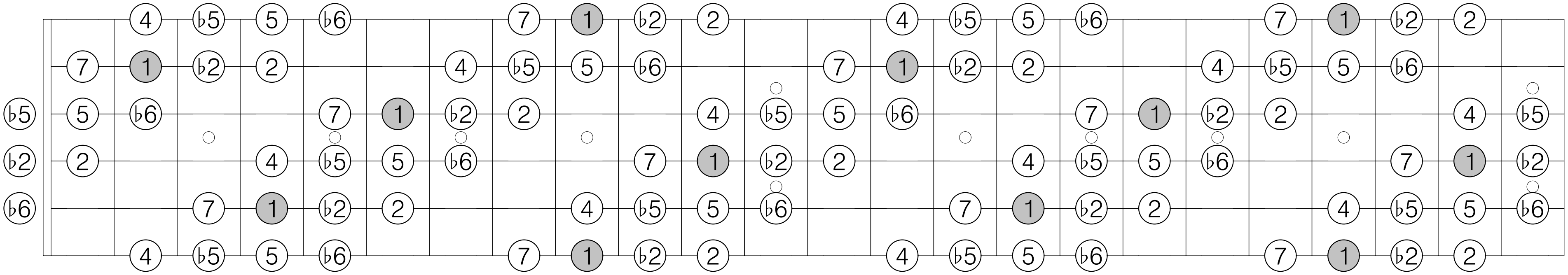

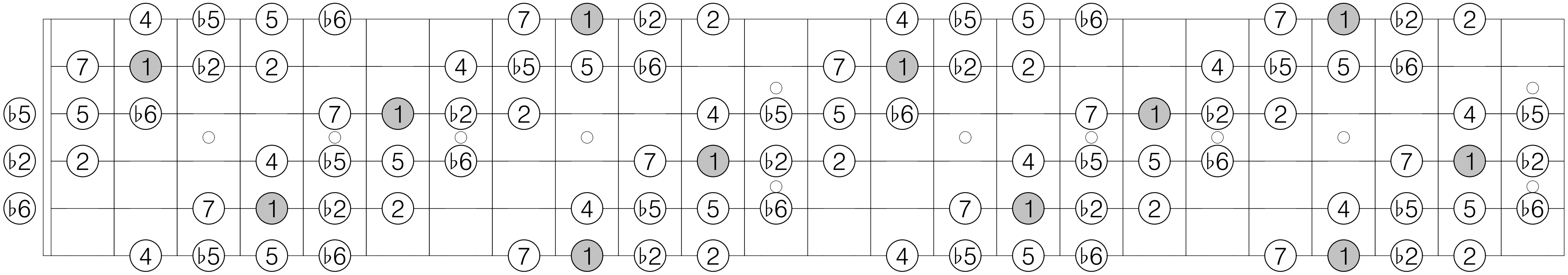

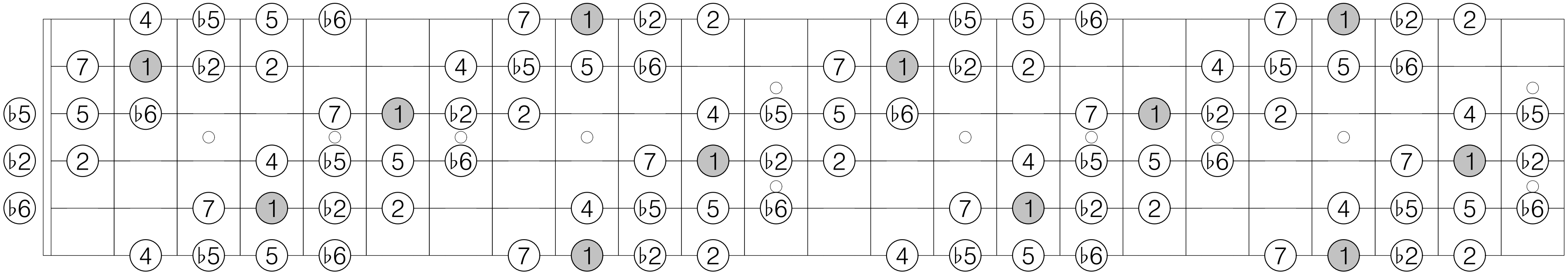

C# transposition 2 of Mode 4 [1, 1, 3, 1]

1 ♭2 3 4 ♭5 5 ♭7 7 1 ♭2 3 4 ♭5 5 ♭7 7

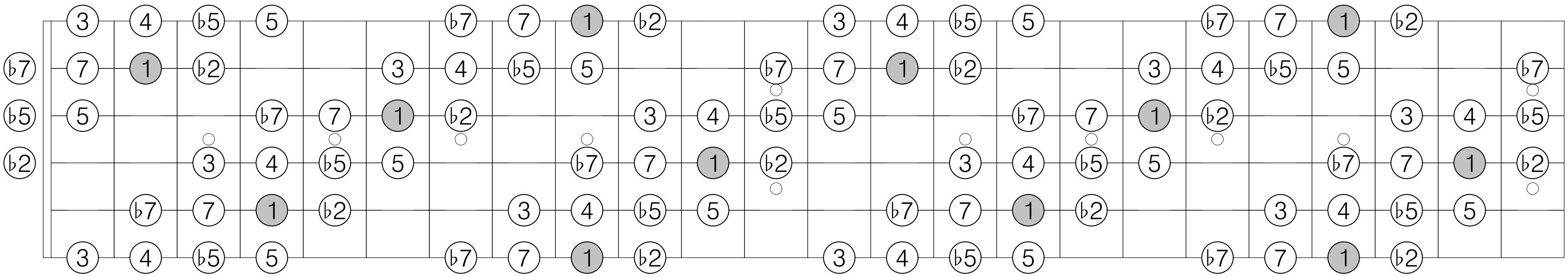

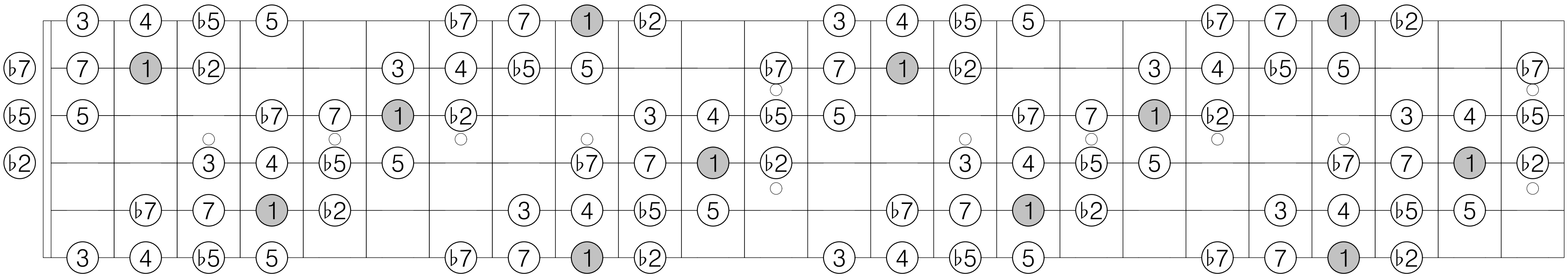

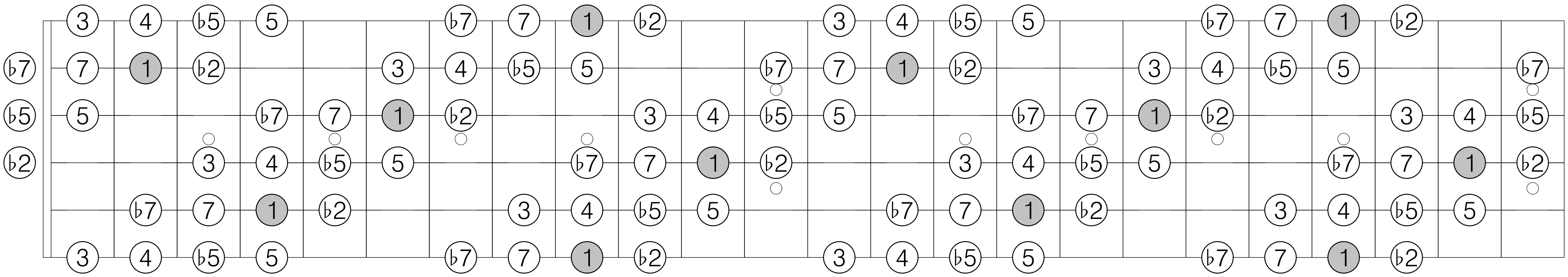

C# transposition 3 of Mode 4 [1, 1, 3, 1]

1 ♭3 3 4 ♭5 6 ♭7 7 1 ♭3 3 4 ♭5 6 ♭7 7

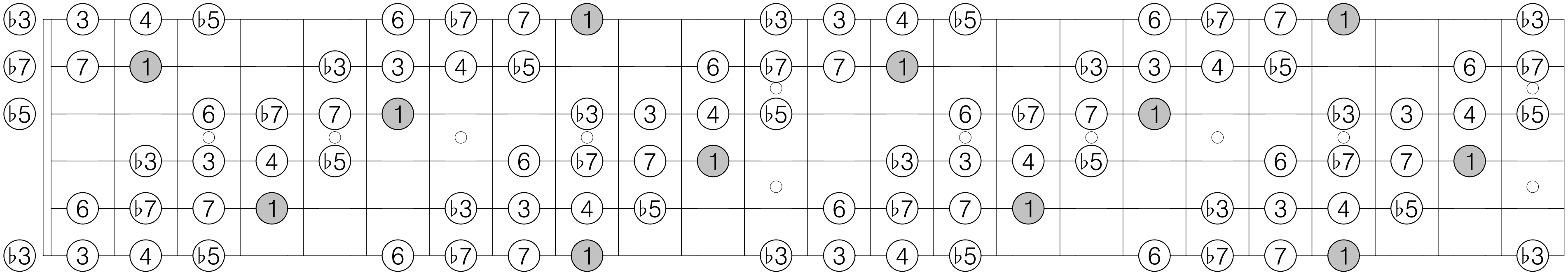

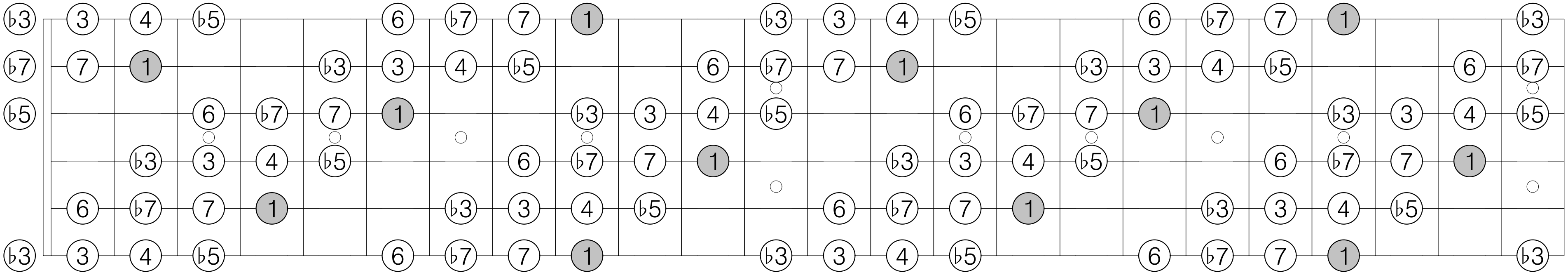

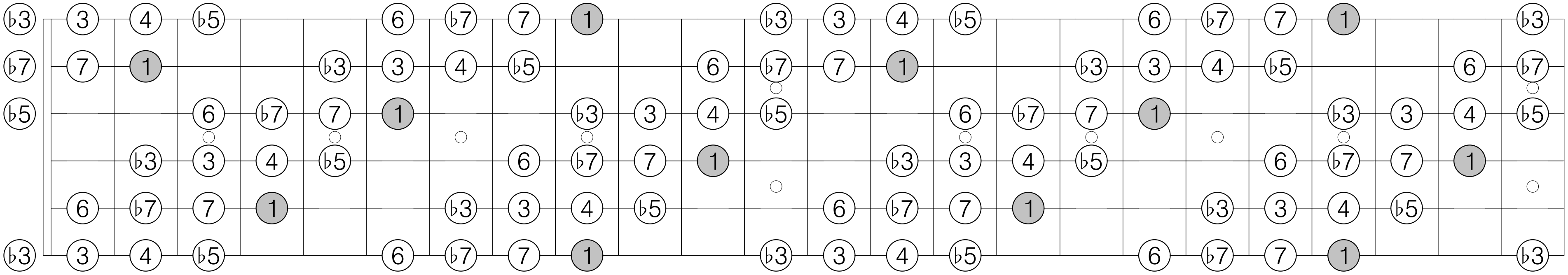

C# transposition 4 of Mode 4 [1, 1, 3, 1]

1 ♭2 2 ♭3 ♭5 5 ♭6 6 1 ♭2 2 ♭3 ♭5 5 ♭6 6

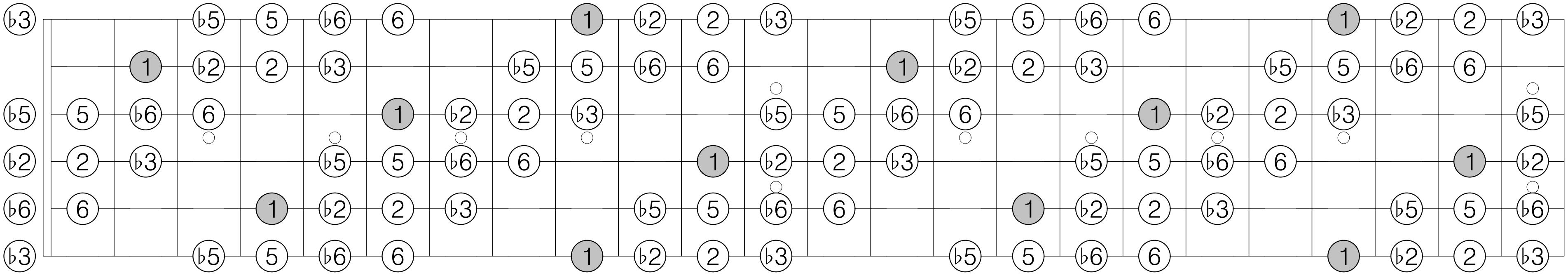

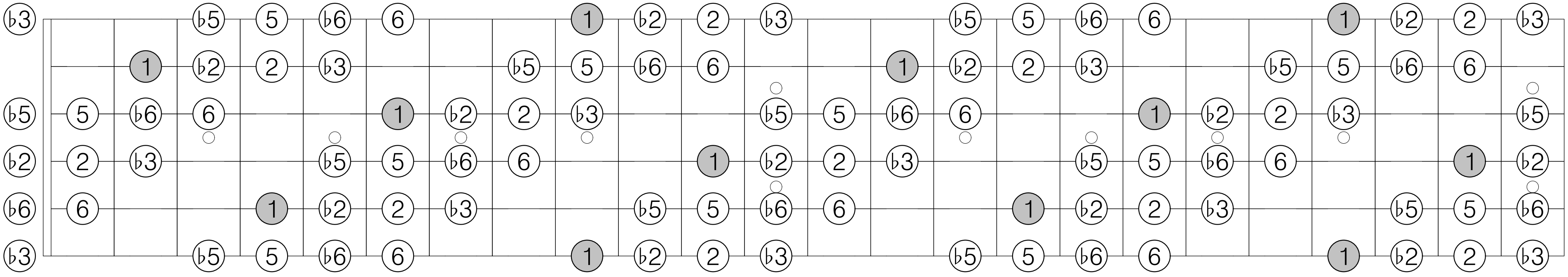

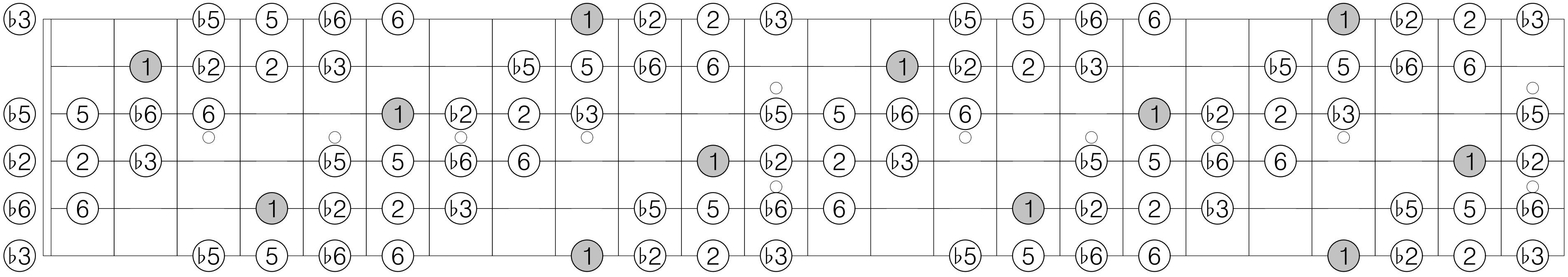

C# transposition 1 of Mode 5 [1, 4, 1]

1 ♭2 4 ♭5 5 7 1 ♭2 4 ♭5 5 7

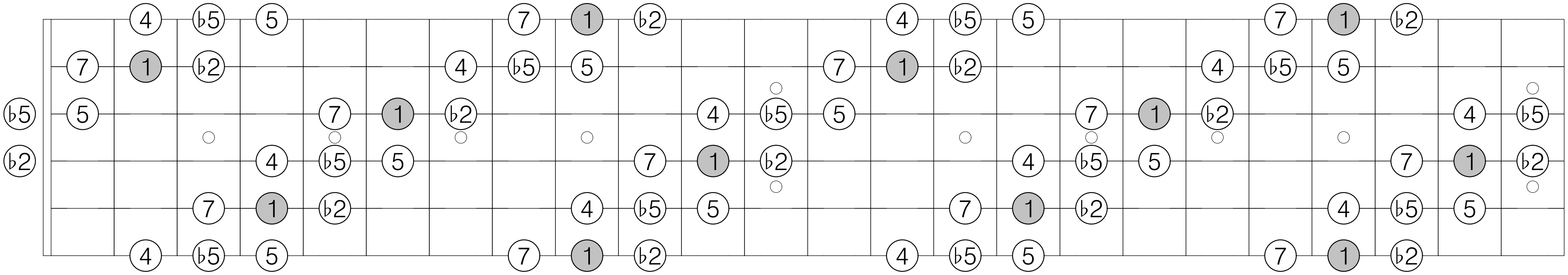

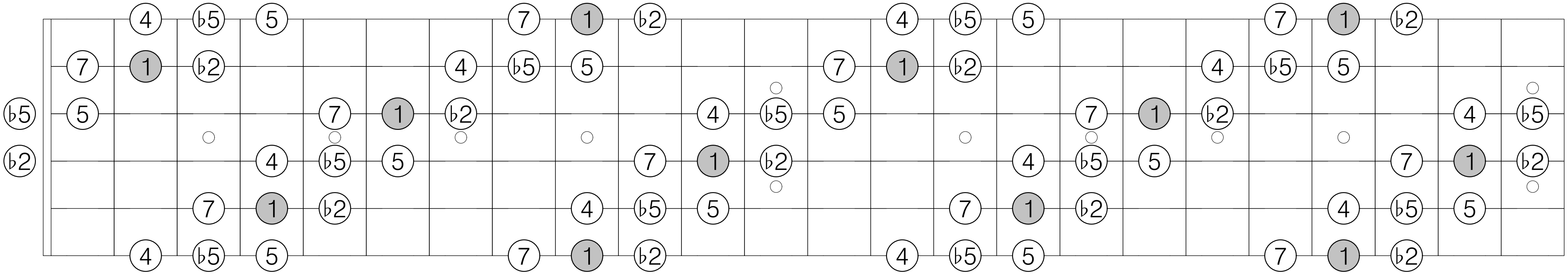

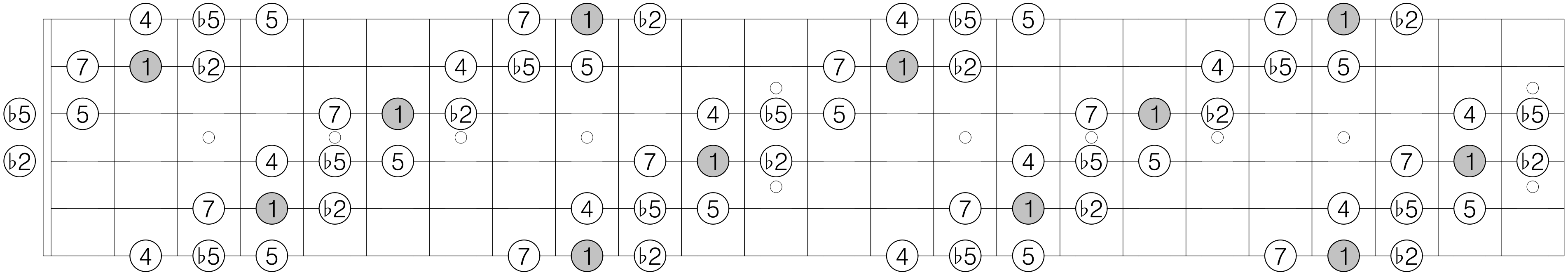

C# transposition 2 of Mode 5 [1, 4, 1]

1 3 4 ♭5 ♭7 7 1 3 4 ♭5 ♭7 7

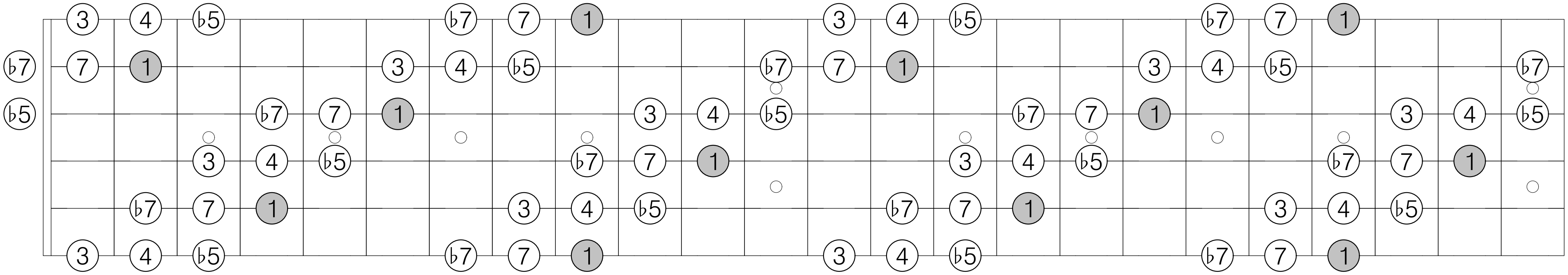

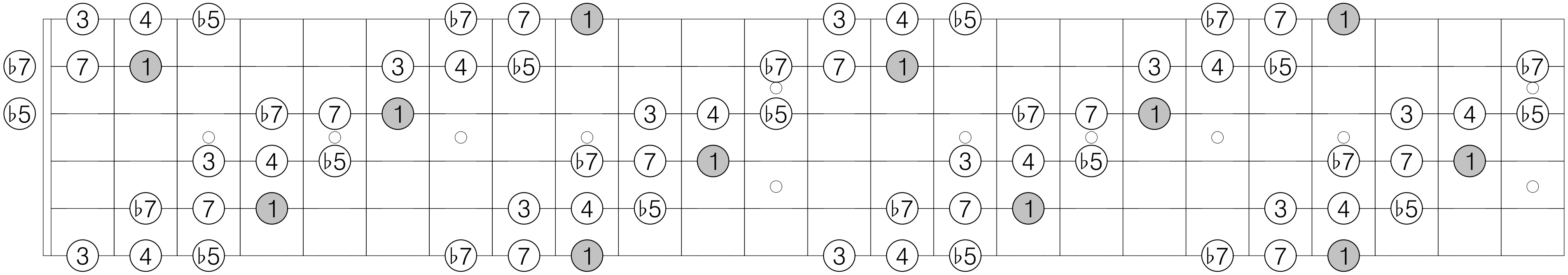

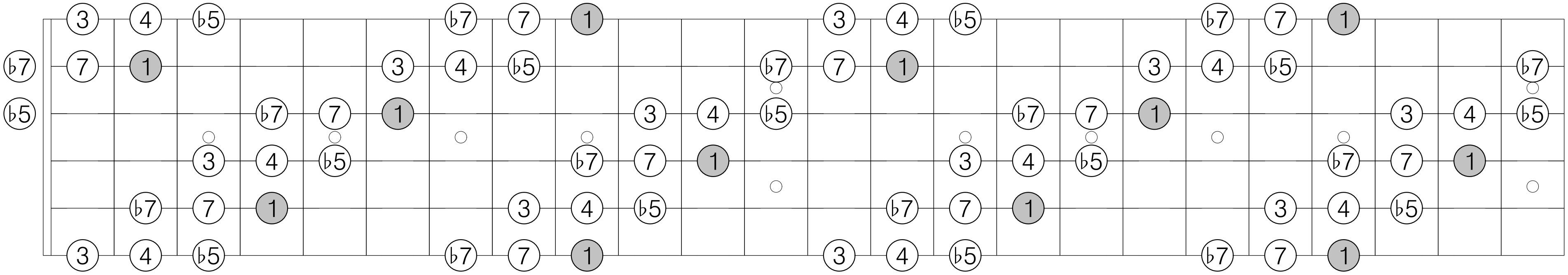

C# transposition 3 of Mode 5 [1, 4, 1]

1 ♭2 2 ♭5 5 ♭6 1 ♭2 2 ♭5 5 ♭6

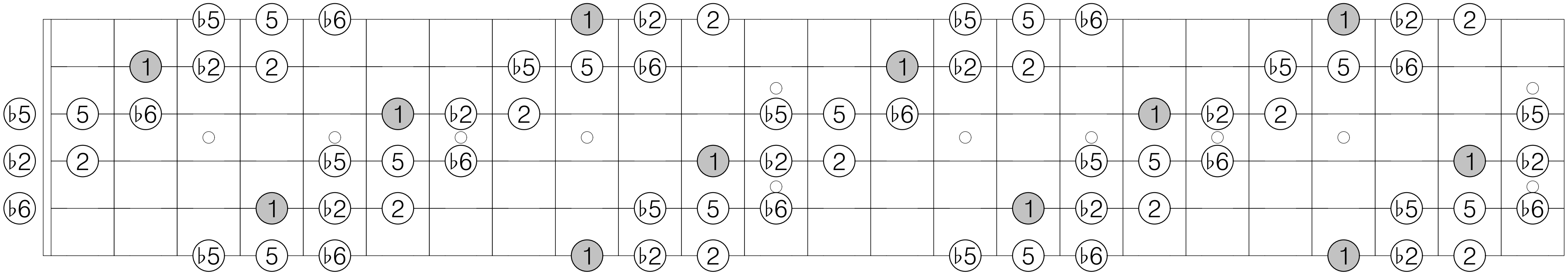

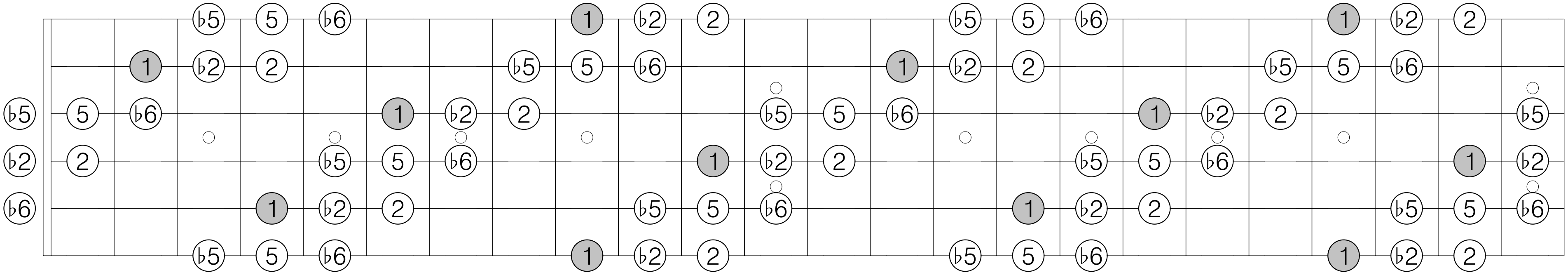

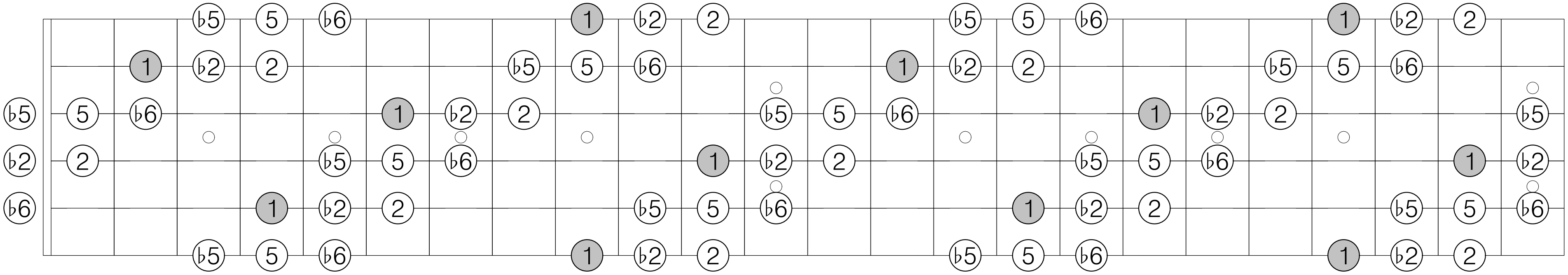

C# transposition 1 of Mode 6 [1, 1, 2, 2]

1 ♭2 2 3 ♭5 5 ♭6 ♭7 1 ♭2 2 3 ♭5 5 ♭6 ♭7

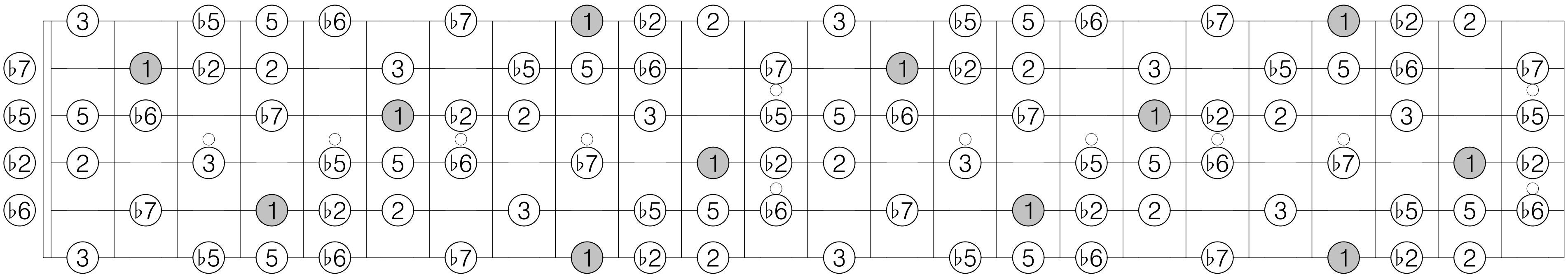

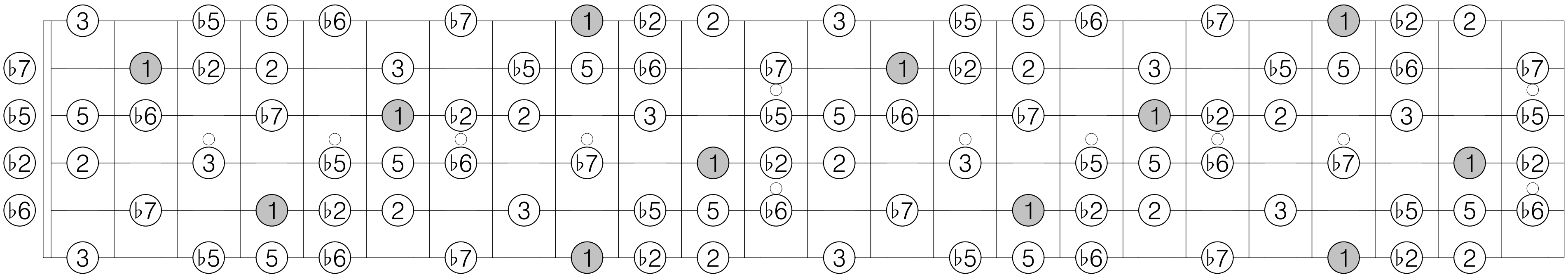

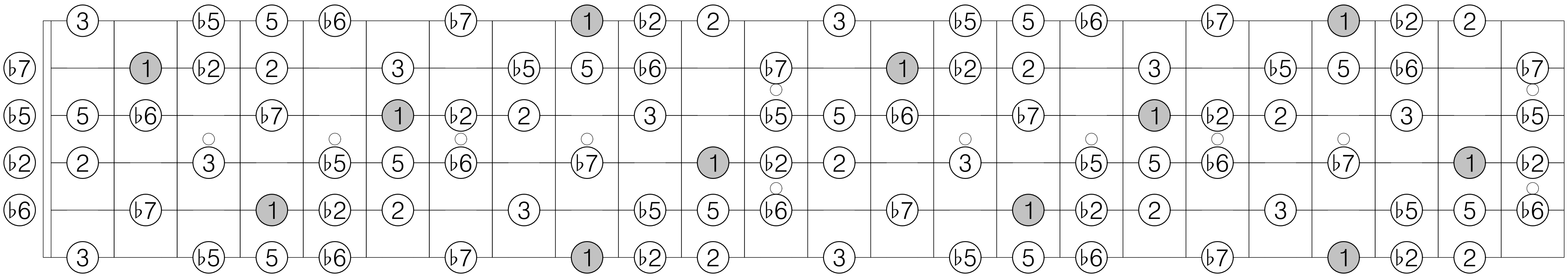

C# transposition 2 of Mode 6 [1, 1, 2, 2]

1 ♭2 ♭3 4 ♭5 5 6 7 1 ♭2 ♭3 4 ♭5 5 6 7

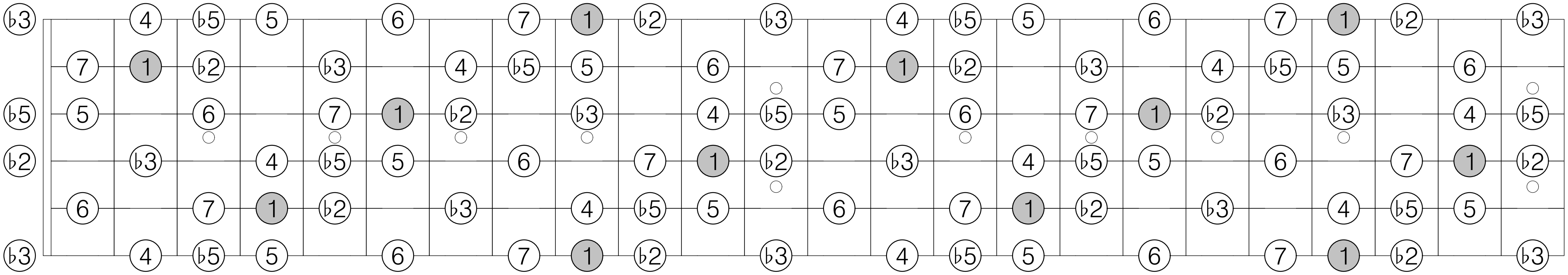

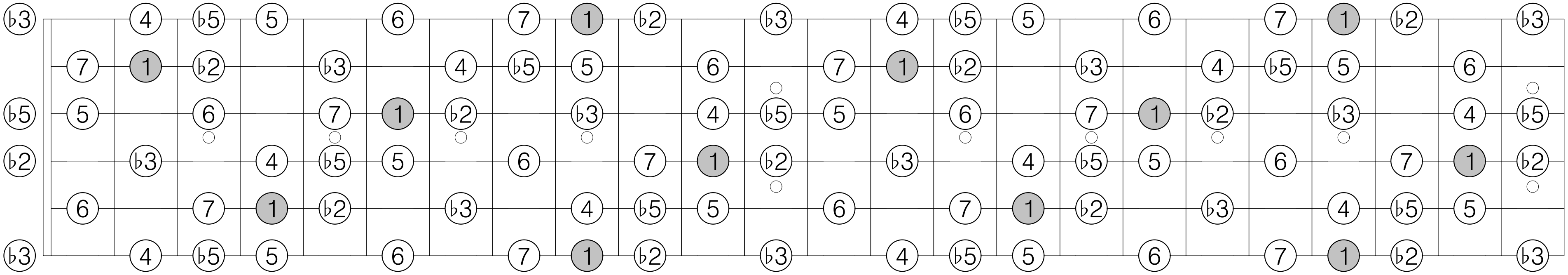

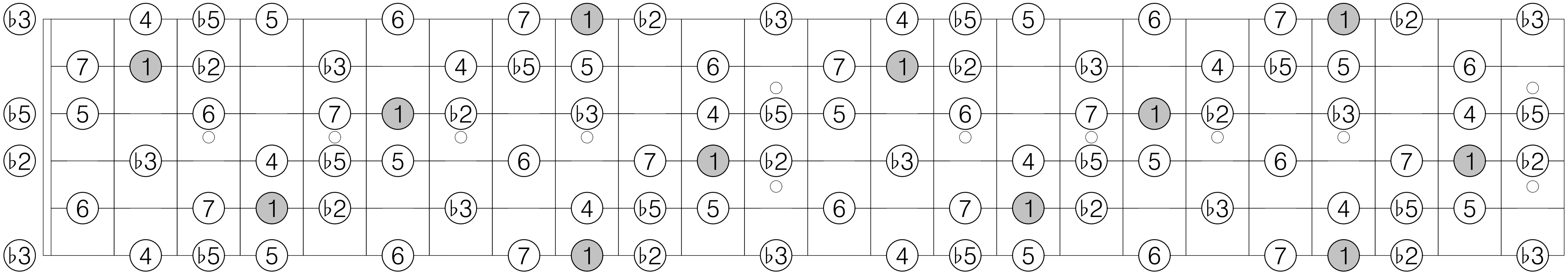

C# transposition 3 of Mode 6 [1, 1, 2, 2]

1 2 3 4 ♭5 ♭6 ♭7 7 1 2 3 4 ♭5 ♭6 ♭7 7

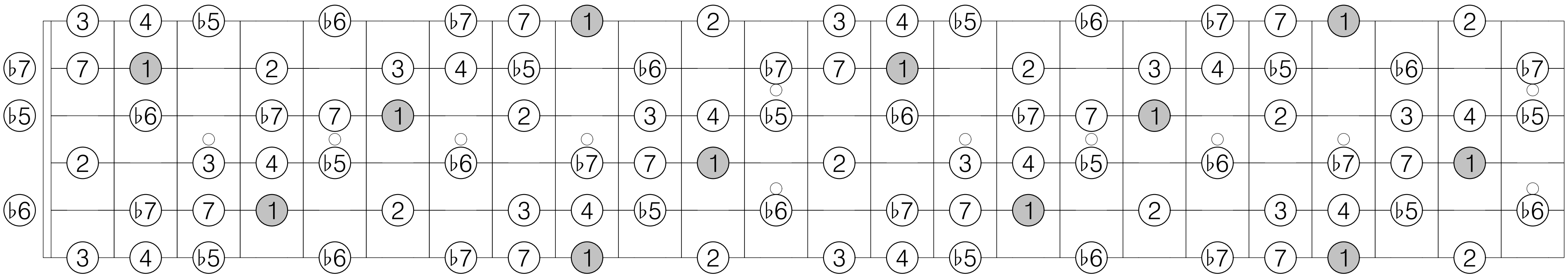

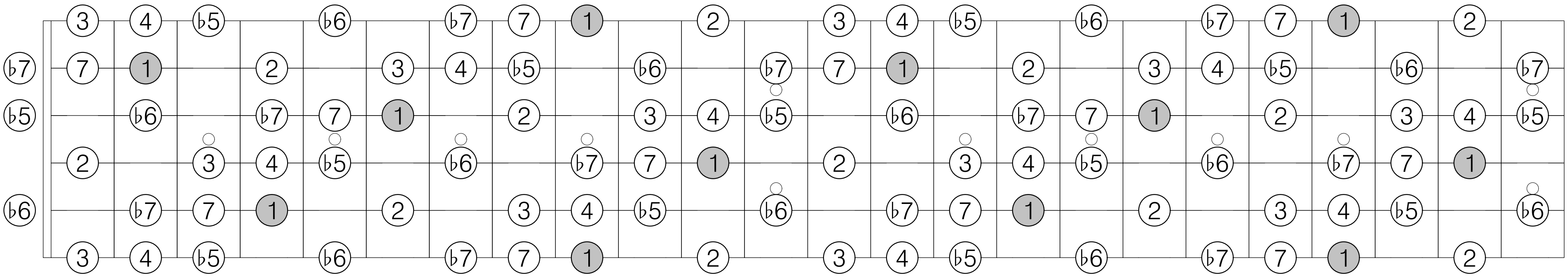

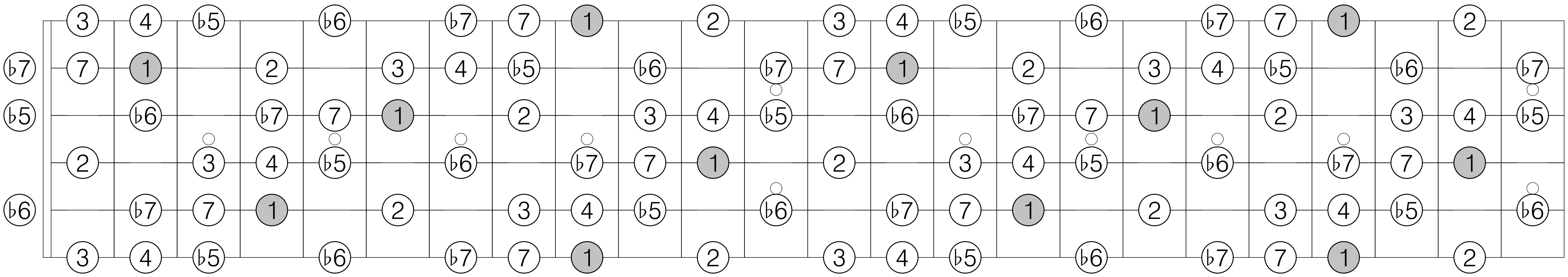

C# transposition 4 of Mode 6 [1, 1, 2, 2]

1 2 ♭3 3 ♭5 ♭6 6 ♭7 1 2 ♭3 3 ♭5 ♭6 6 ♭7

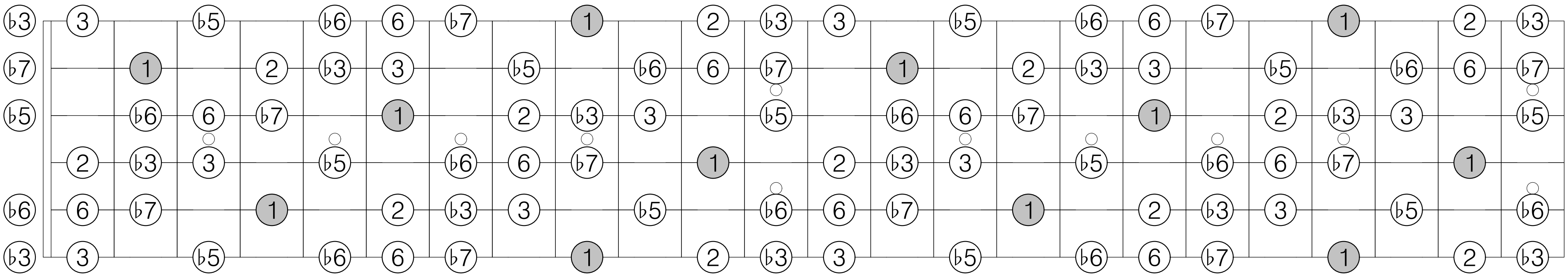

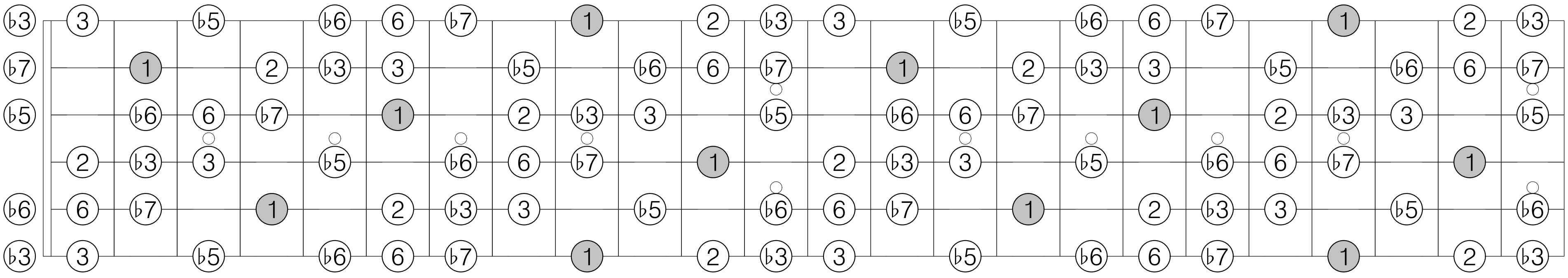

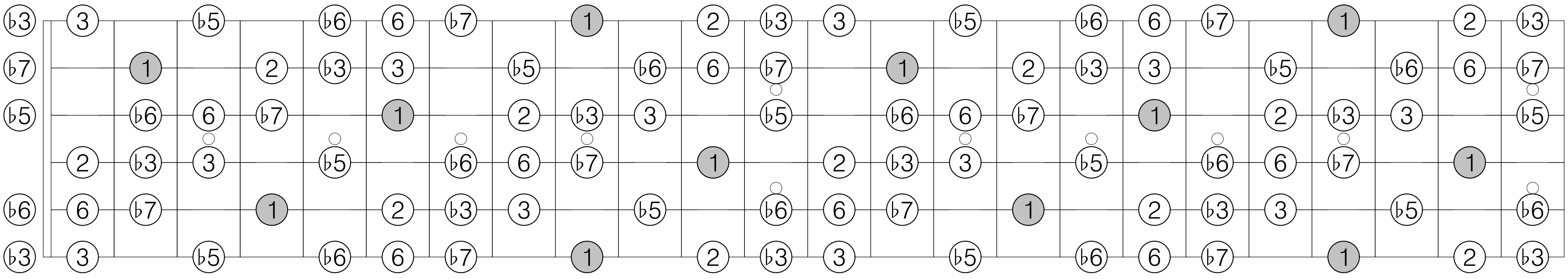

C# transposition 1 of Mode 7 [1, 1, 1, 2, 1]

1 ♭2 2 ♭3 4 ♭5 5 ♭6 6 7 1 ♭2 2 ♭3 4 ♭5 5 ♭6 6 7

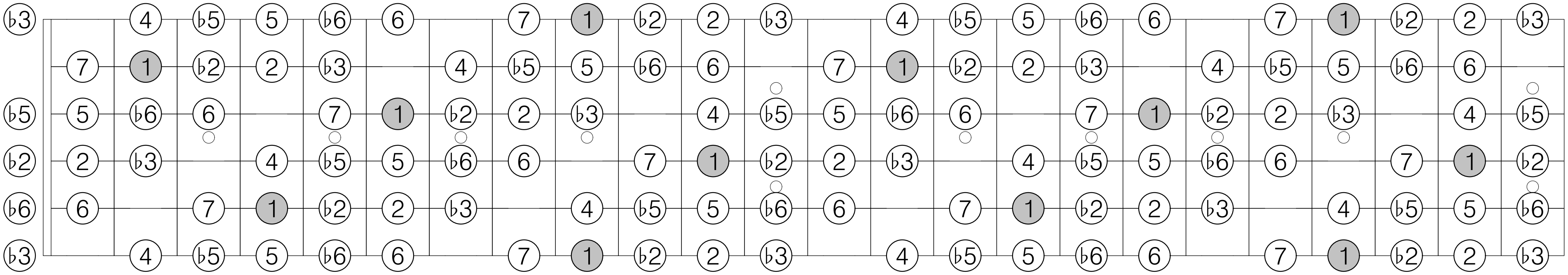

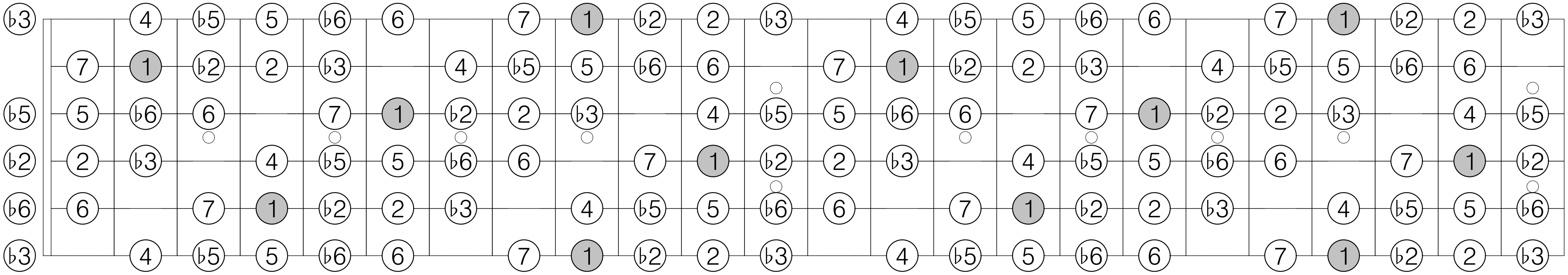

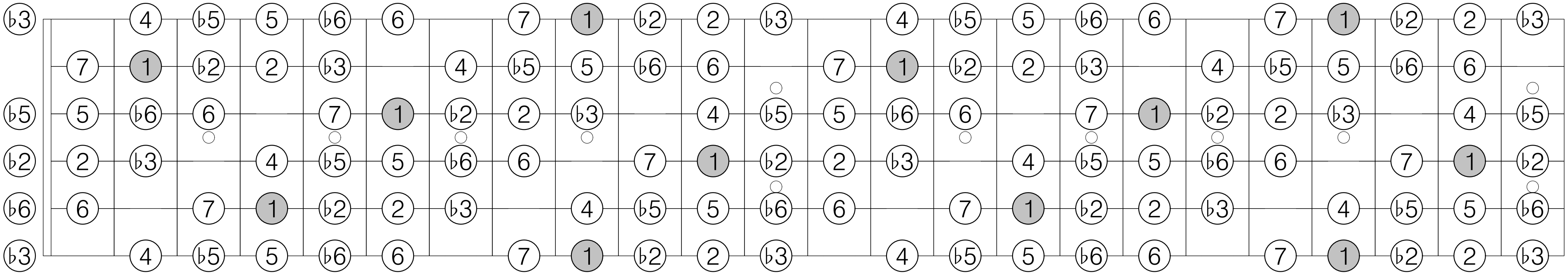

C# transposition 2 of Mode 7 [1, 1, 1, 2, 1]

1 ♭2 2 3 4 ♭5 5 ♭6 ♭7 7 1 ♭2 2 3 4 ♭5 5 ♭6 ♭7 7

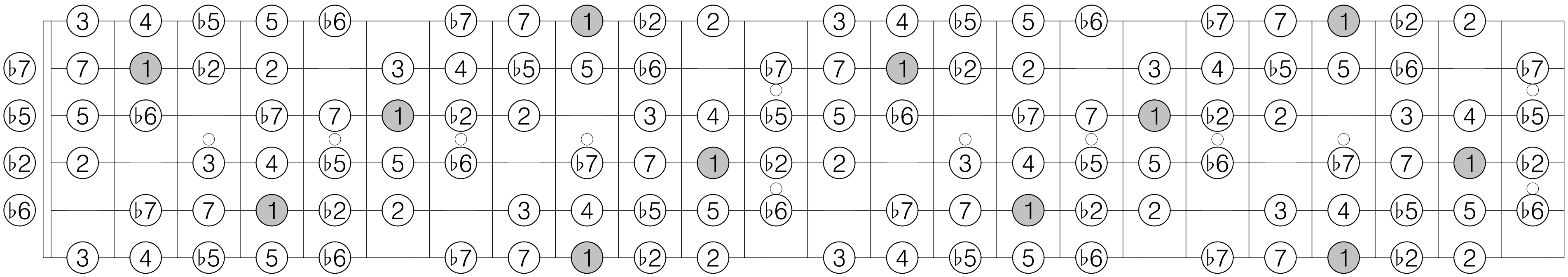

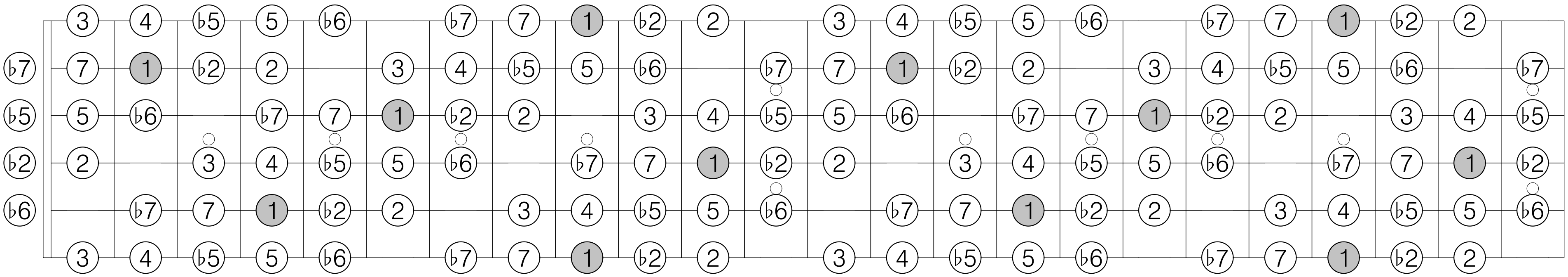

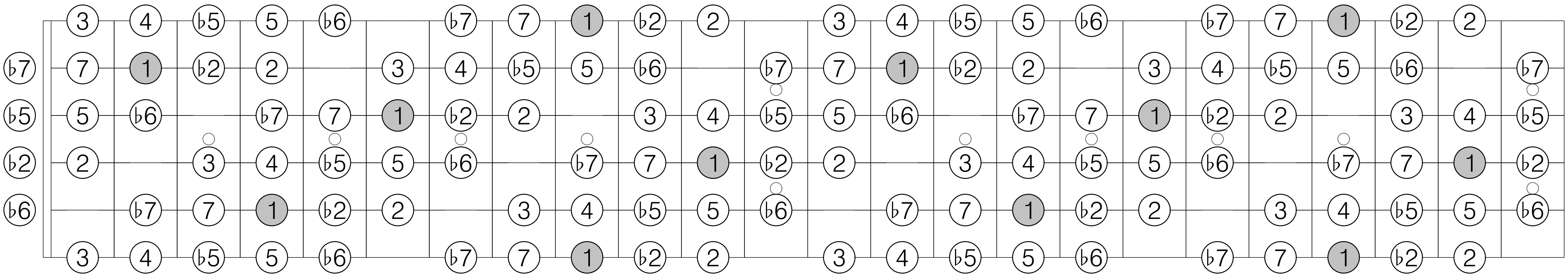

C# transposition 3 of Mode 7 [1, 1, 1, 2, 1]

1 ♭2 ♭3 3 4 ♭5 5 6 ♭7 7 1 ♭2 ♭3 3 4 ♭5 5 6 ♭7 7

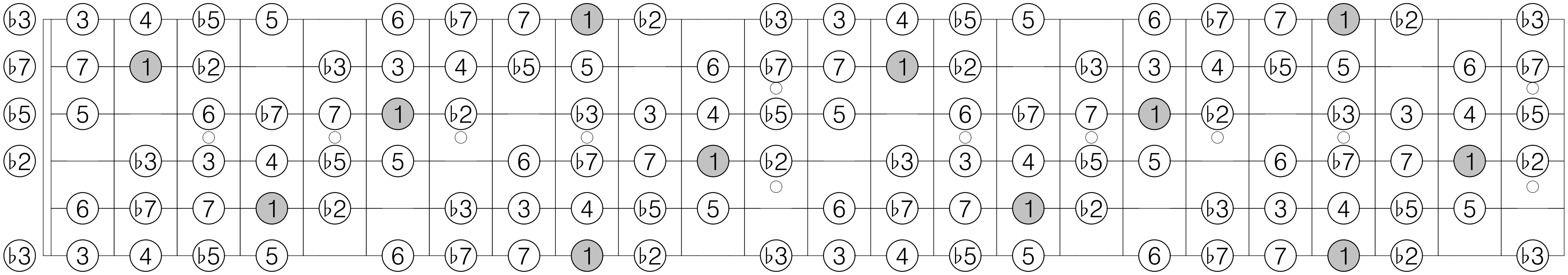

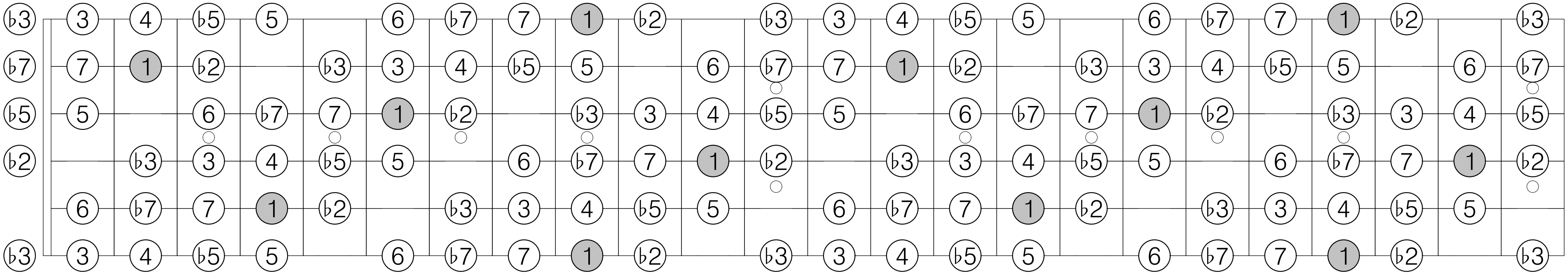

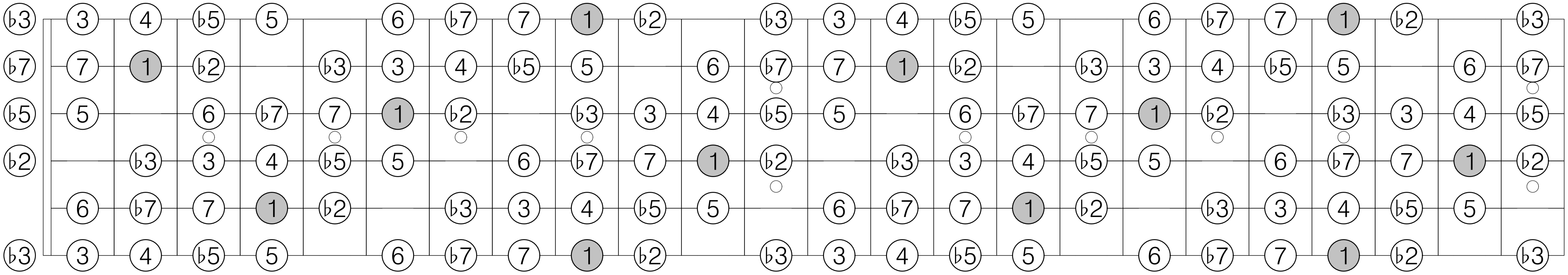

C# transposition 4 of Mode 7 [1, 1, 1, 2, 1]

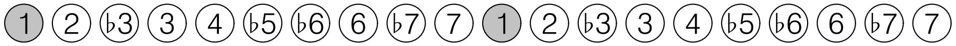

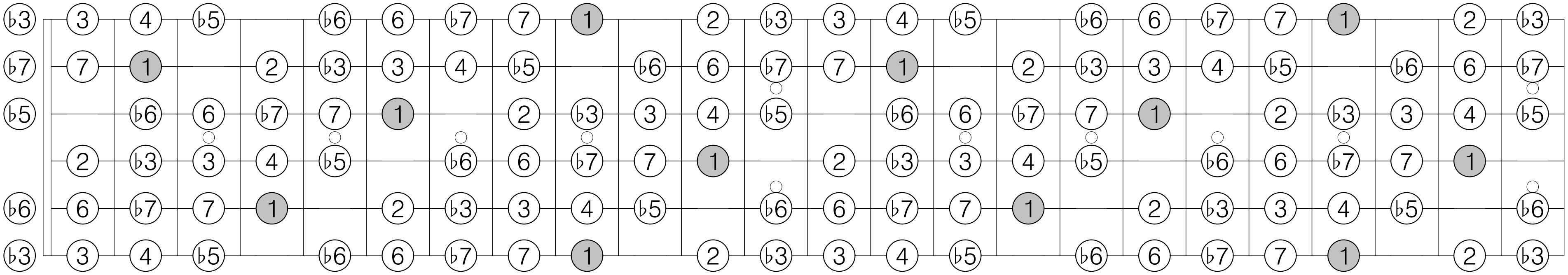

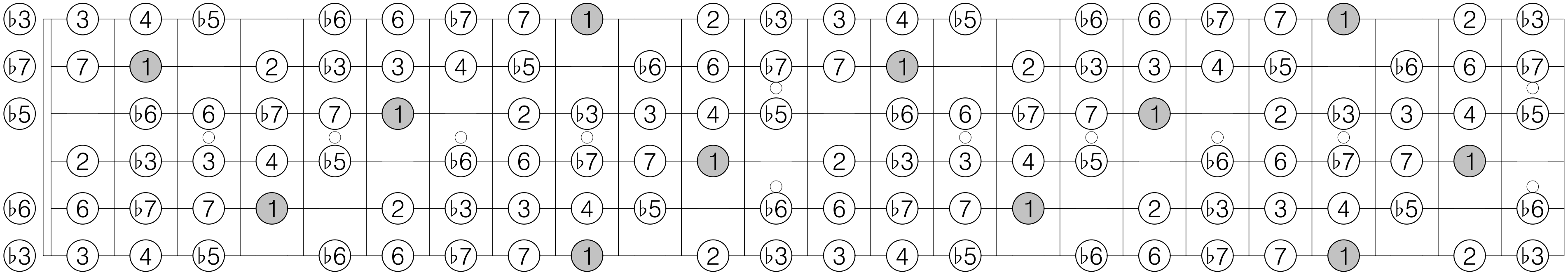

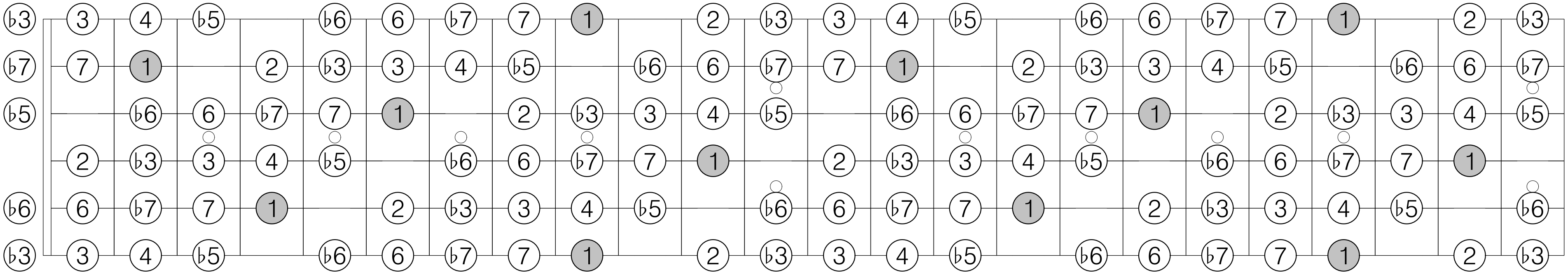

C# transposition 5 of Mode 7 [1, 1, 1, 2, 1]

1 ♭2 2 ♭3 3 ♭5 5 ♭6 6 ♭7 1 ♭2 2 ♭3 3 ♭5 5 ♭6 6 ♭7

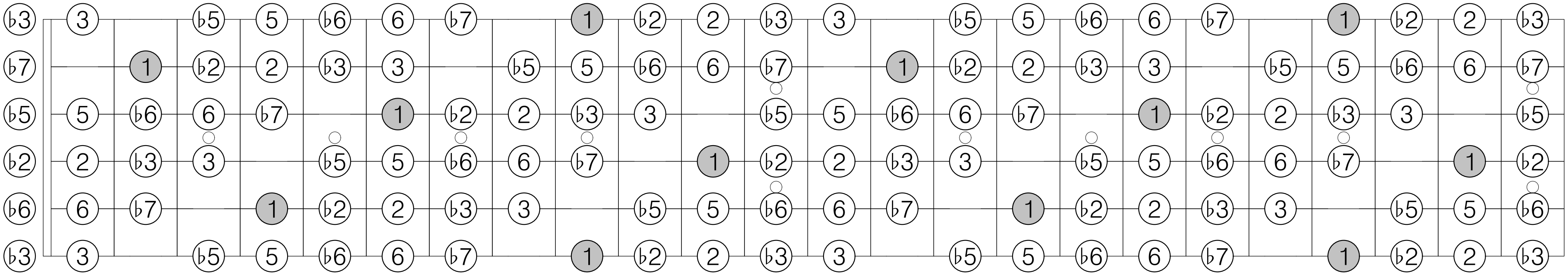

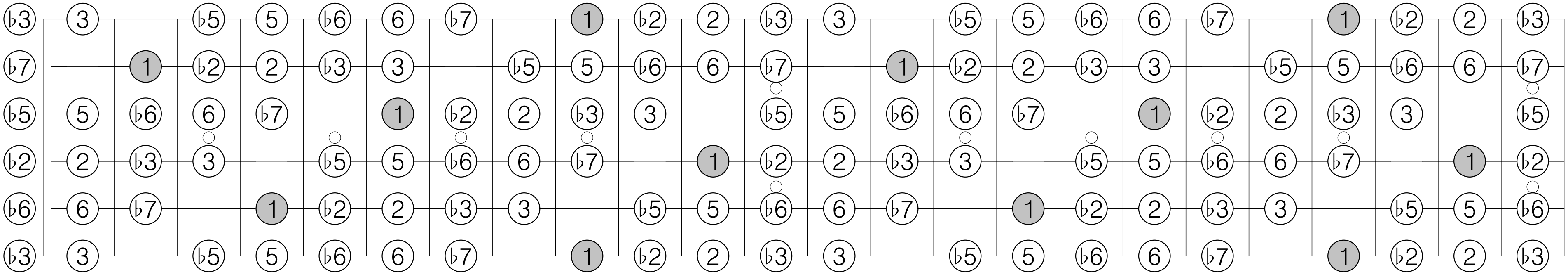

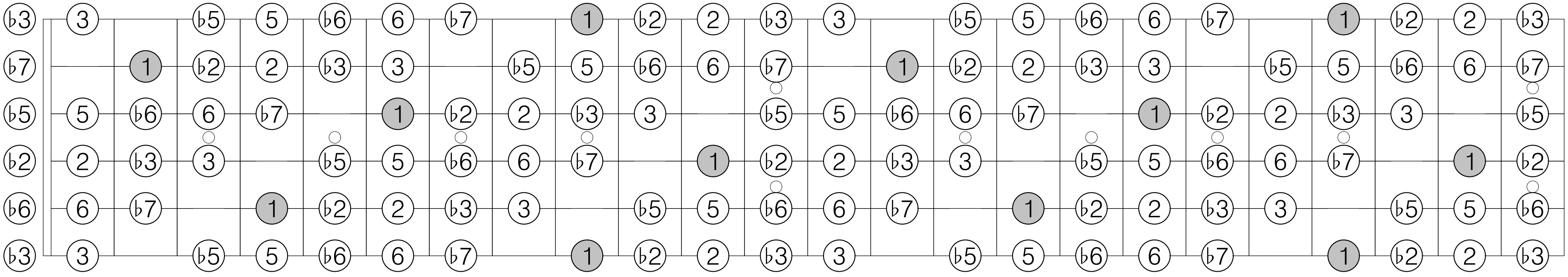

D transposition 1 of Mode 1 [2]

1 2 3 ♭5 ♭6 ♭7 1 2 3 ♭5 ♭6 ♭7

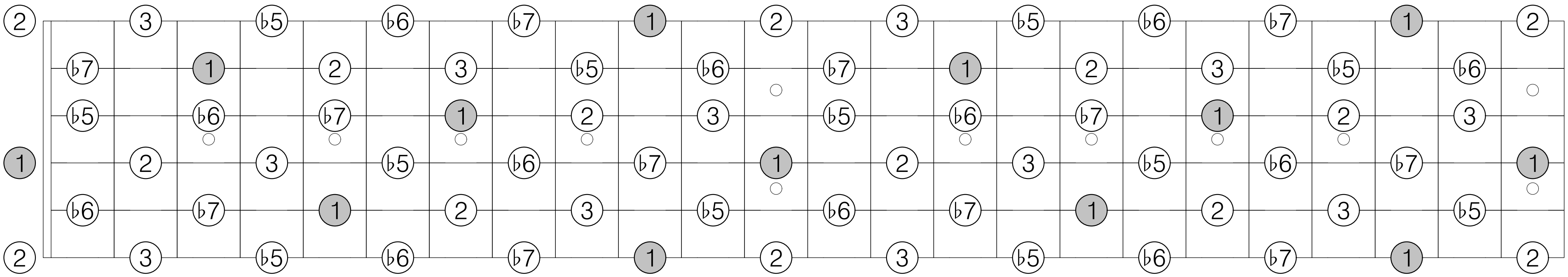

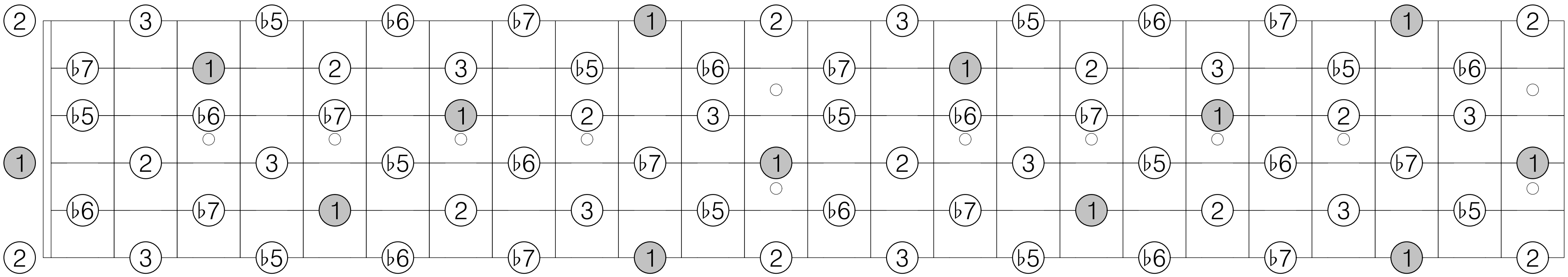

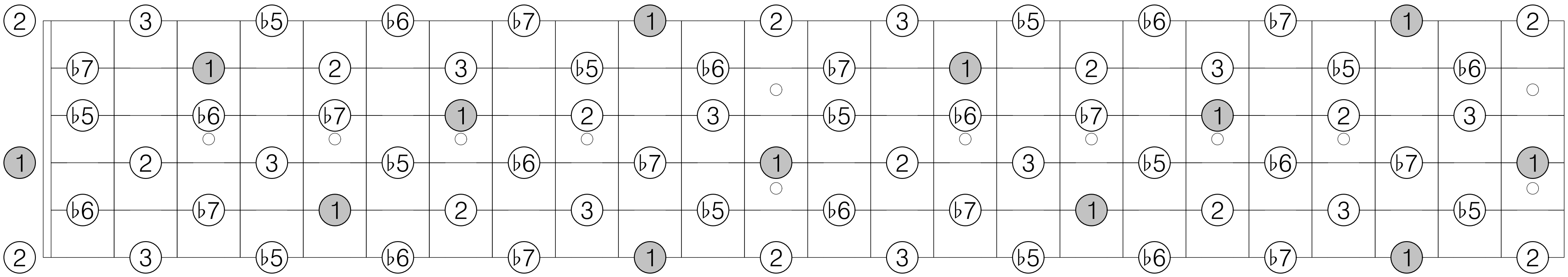

D transposition 1 of Mode 2 [1, 2]

1 ♭2 ♭3 3 ♭5 5 6 ♭7 1 ♭2 ♭3 3 ♭5 5 6 ♭7

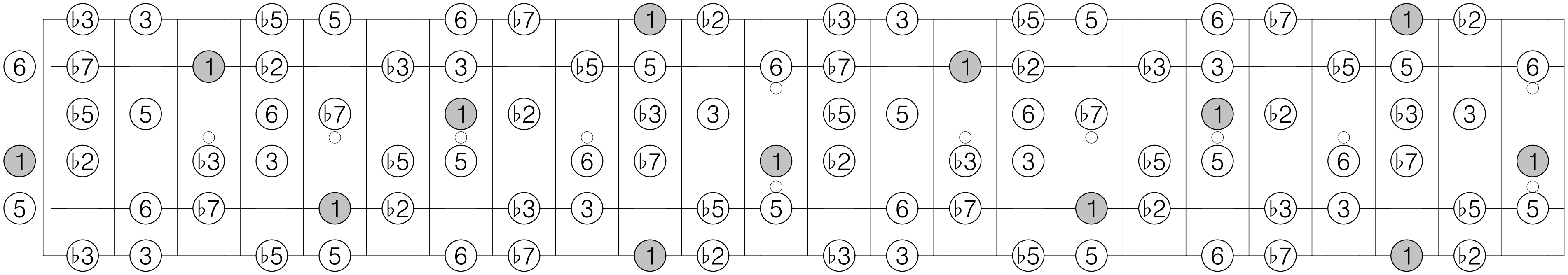

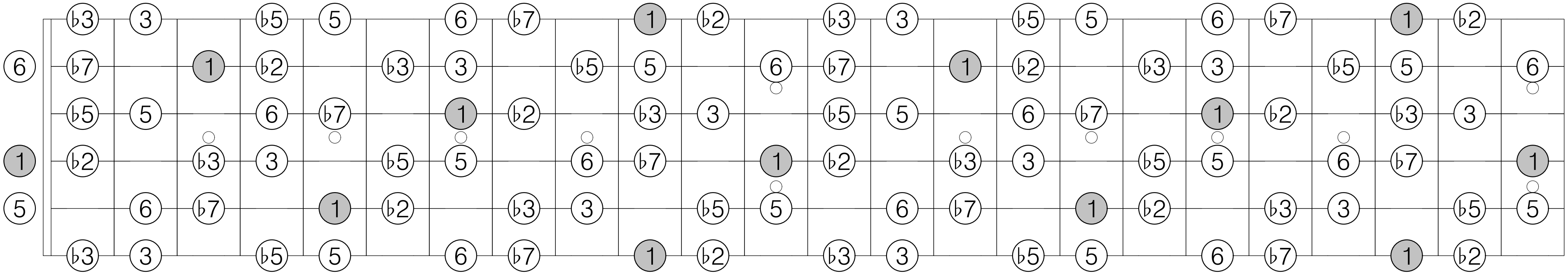

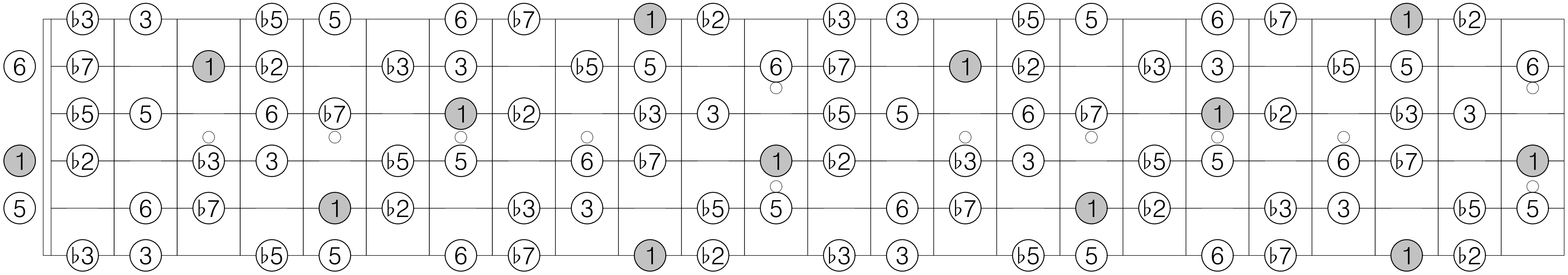

D transposition 2 of Mode 2 [1, 2]

1 2 ♭3 4 ♭5 ♭6 6 7 1 2 ♭3 4 ♭5 ♭6 6 7

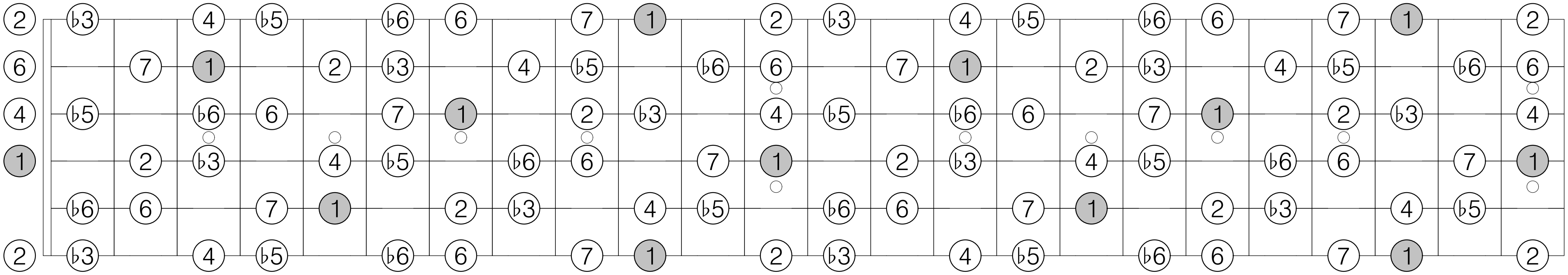

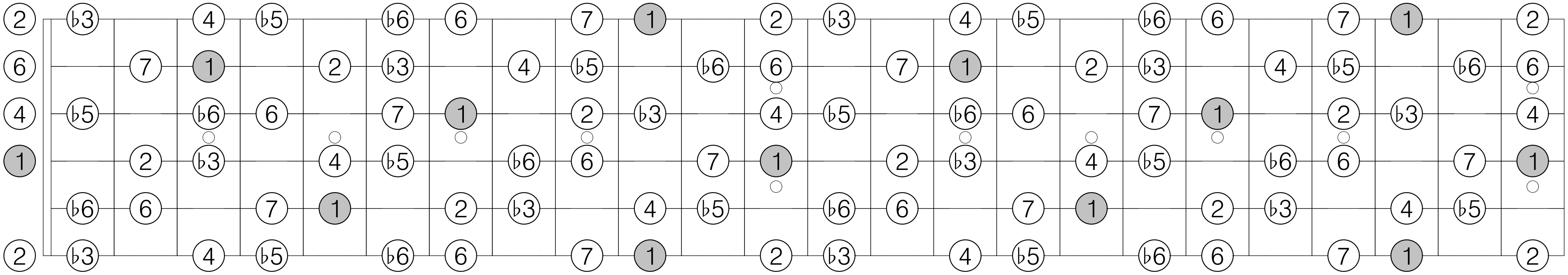

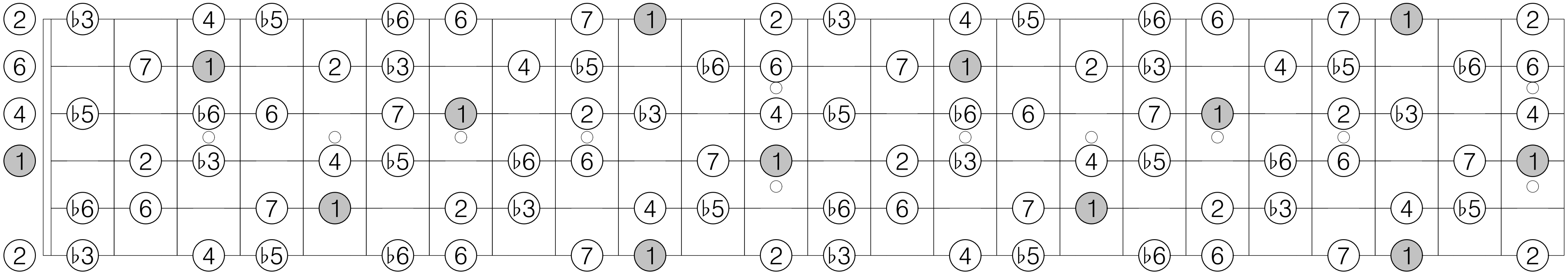

D transposition 1 of Mode 3 [1, 1, 2]

1 ♭2 2 3 4 ♭5 ♭6 6 ♭7 1 ♭2 2 3 4 ♭5 ♭6 6 ♭7

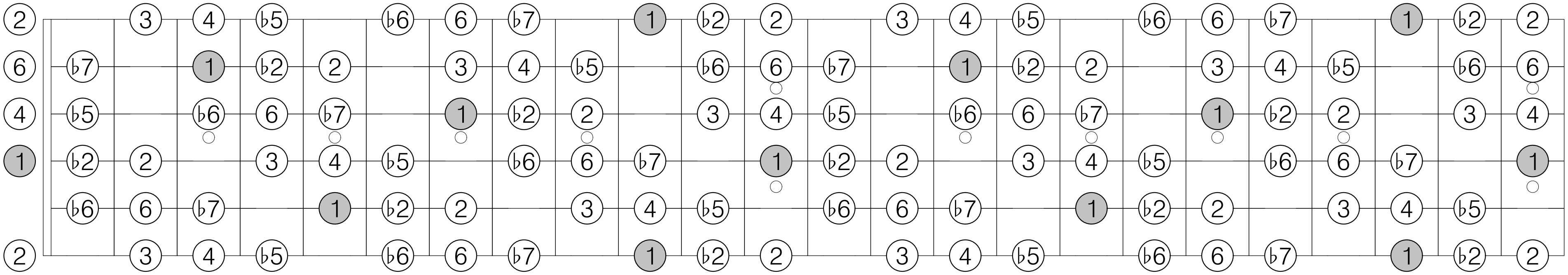

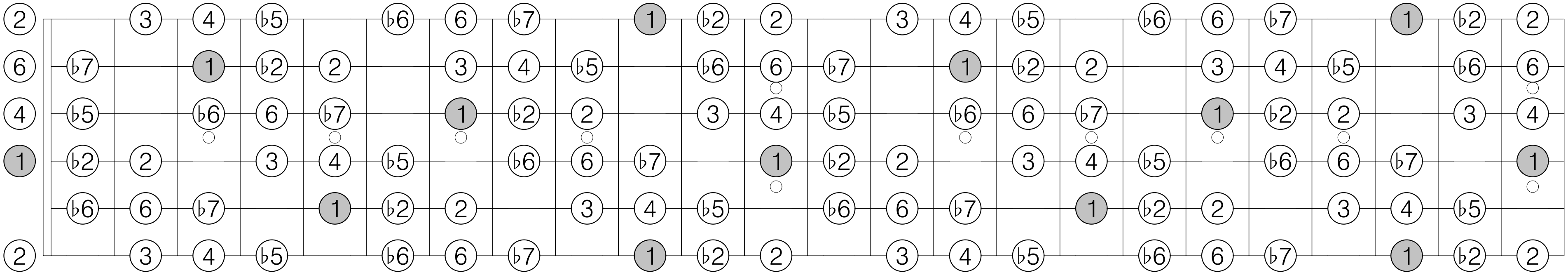

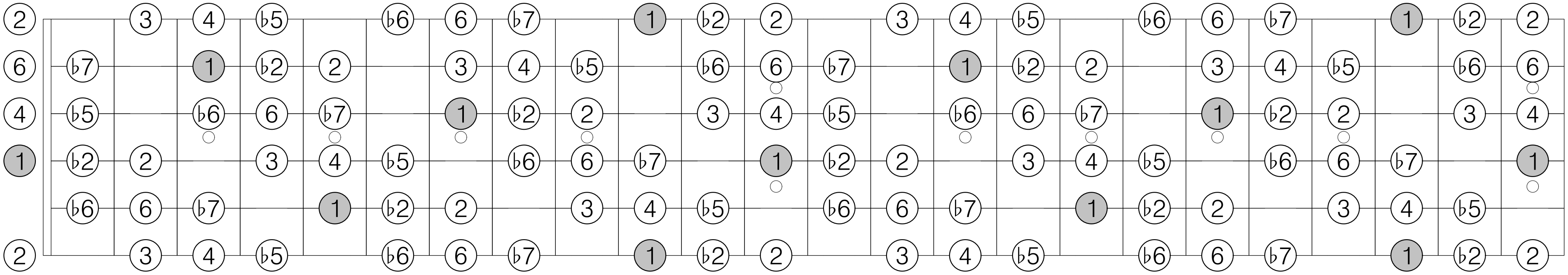

D transposition 2 of Mode 3 [1, 1, 2]

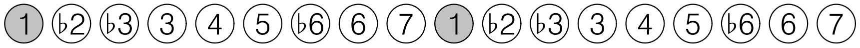

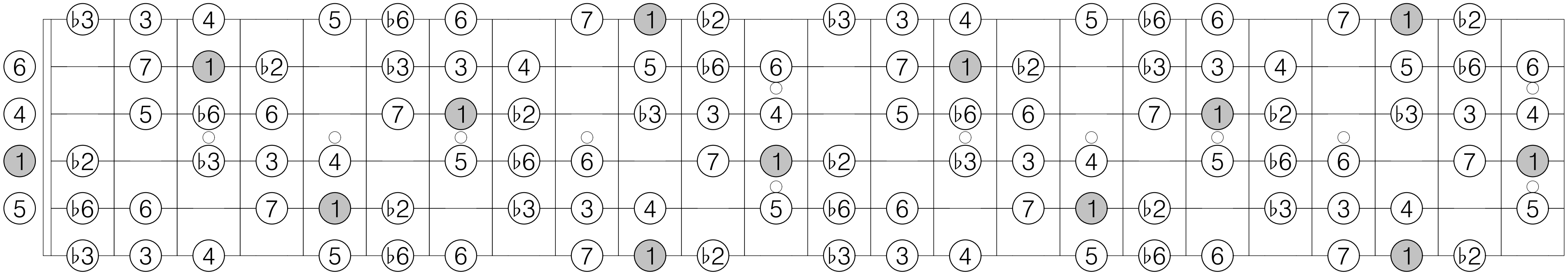

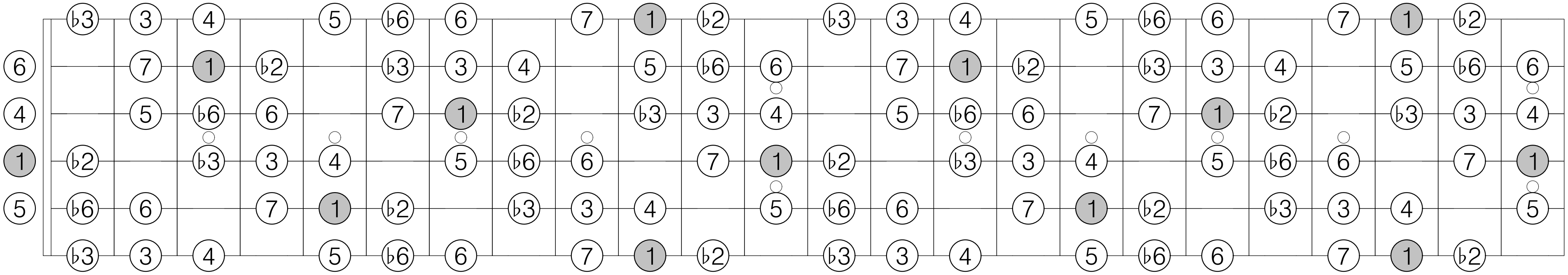

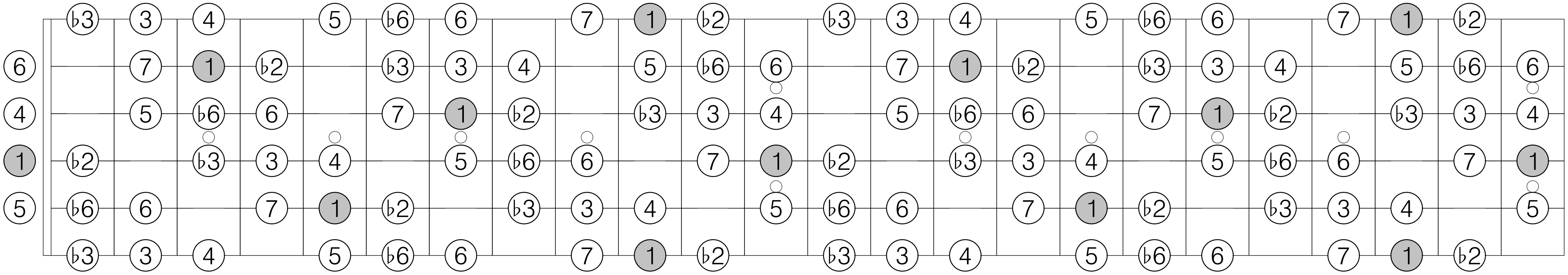

D transposition 3 of Mode 3 [1, 1, 2]

1 2 ♭3 3 ♭5 5 ♭6 ♭7 7 1 2 ♭3 3 ♭5 5 ♭6 ♭7 7

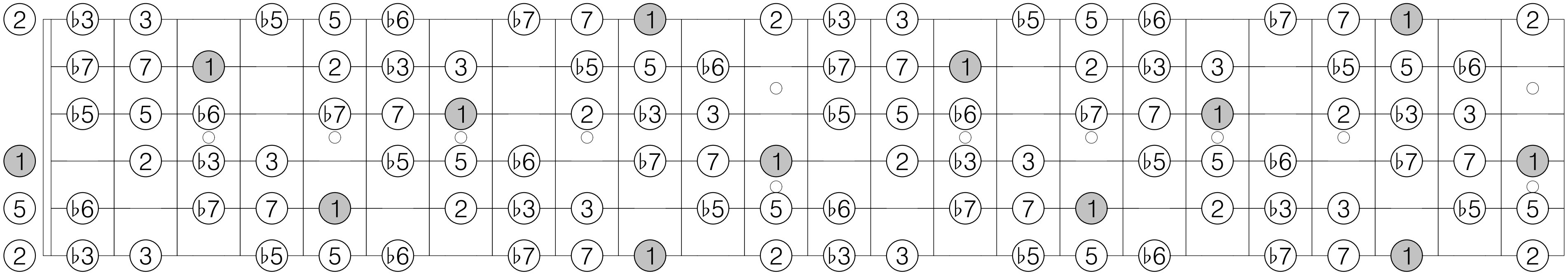

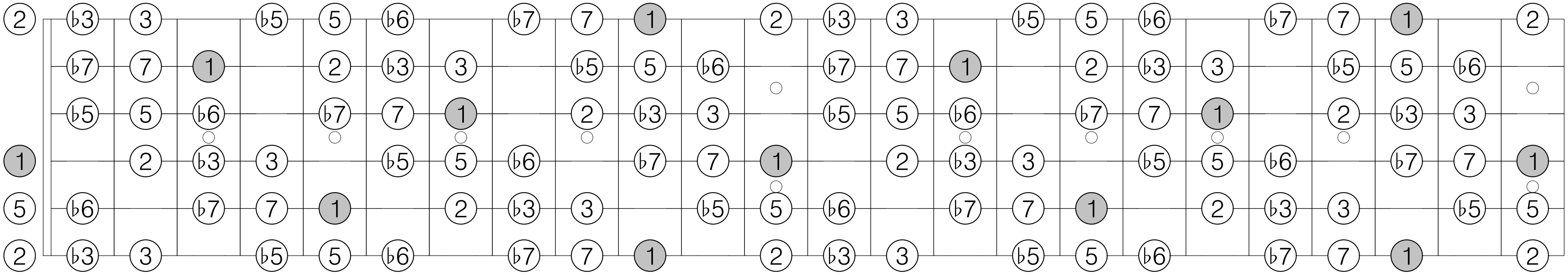

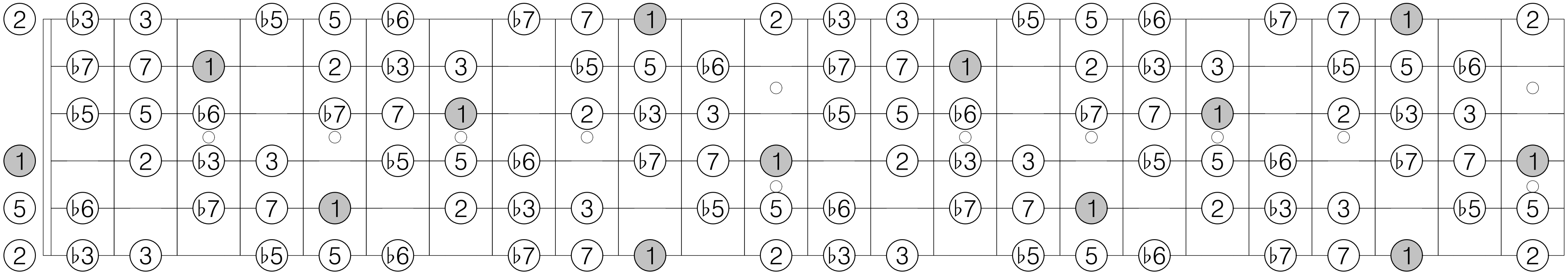

D transposition 1 of Mode 4 [1, 1, 3, 1]

1 ♭2 2 4 ♭5 5 ♭6 7 1 ♭2 2 4 ♭5 5 ♭6 7

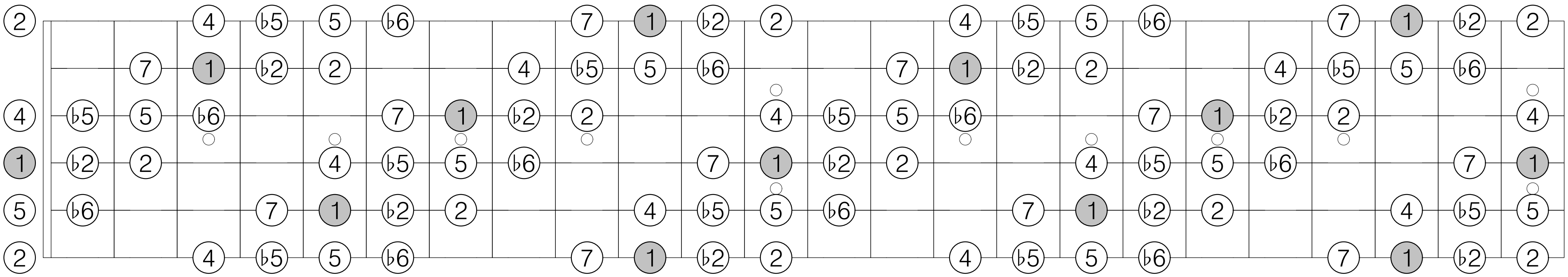

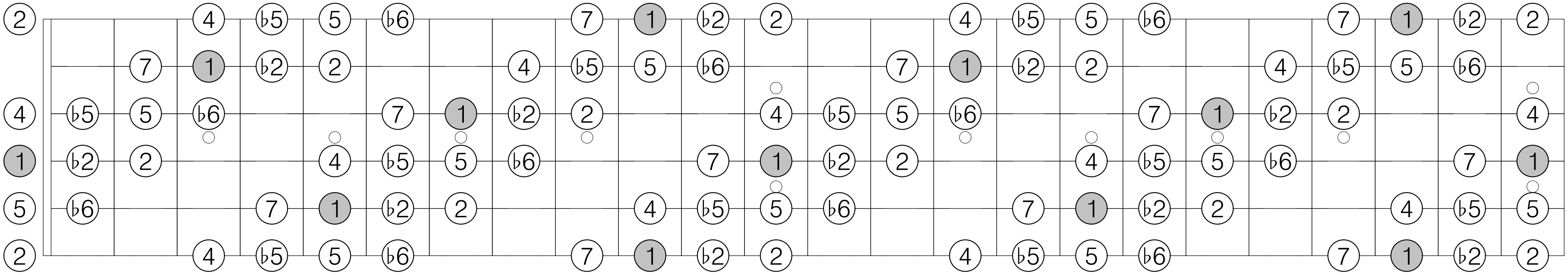

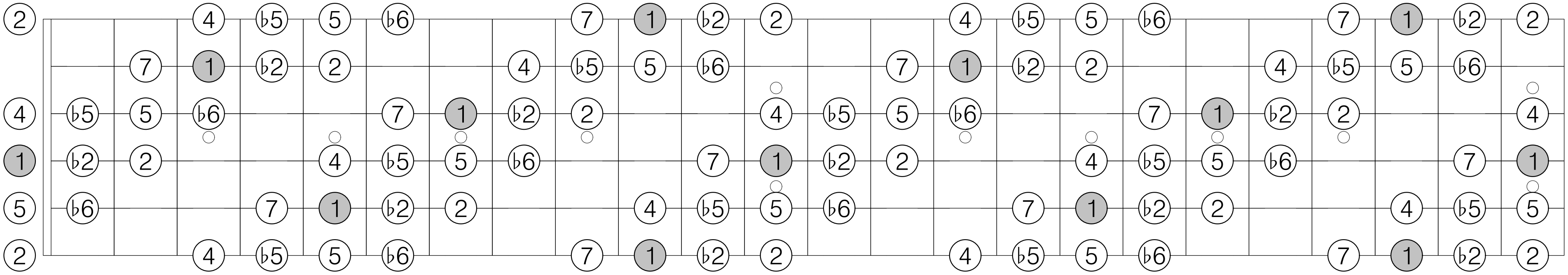

D transposition 2 of Mode 4 [1, 1, 3, 1]

1 ♭2 3 4 ♭5 5 ♭7 7 1 ♭2 3 4 ♭5 5 ♭7 7

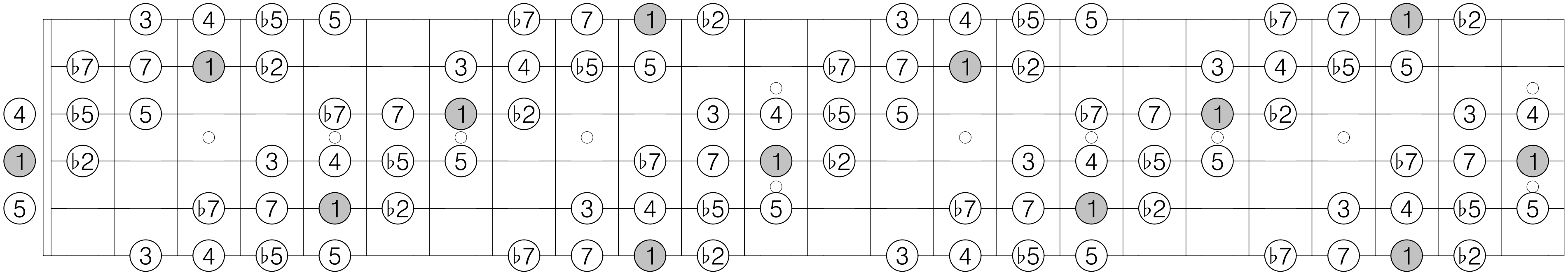

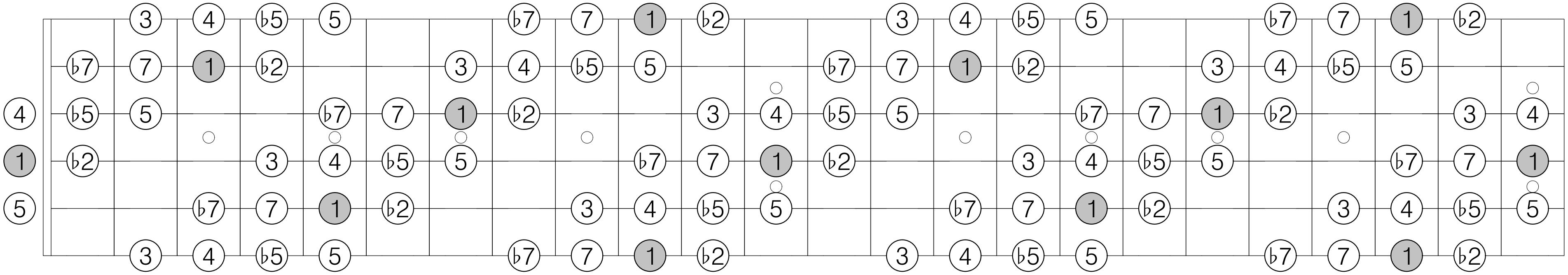

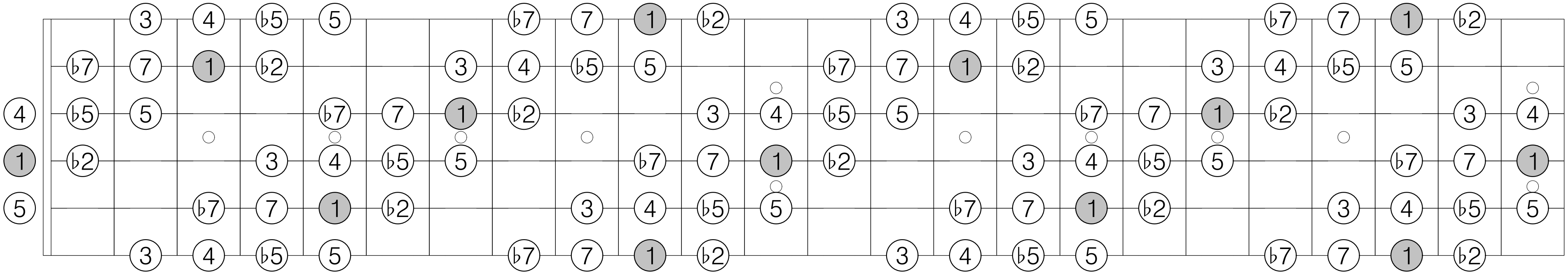

D transposition 3 of Mode 4 [1, 1, 3, 1]

1 ♭3 3 4 ♭5 6 ♭7 7 1 ♭3 3 4 ♭5 6 ♭7 7

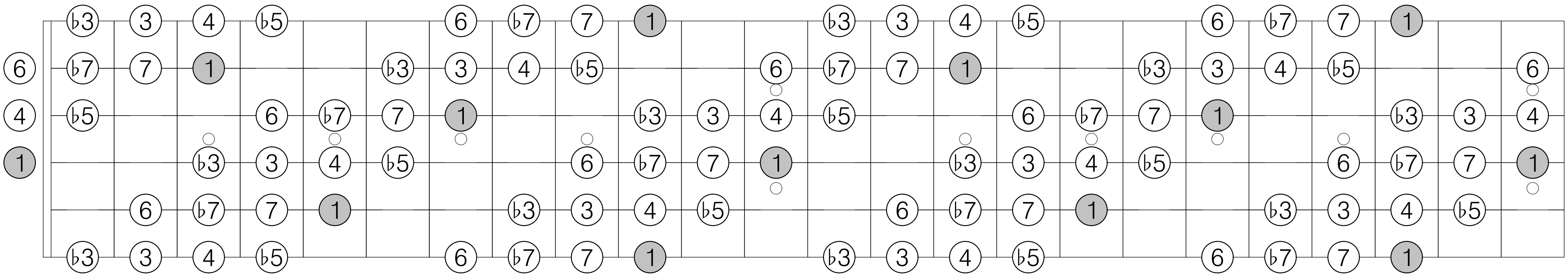

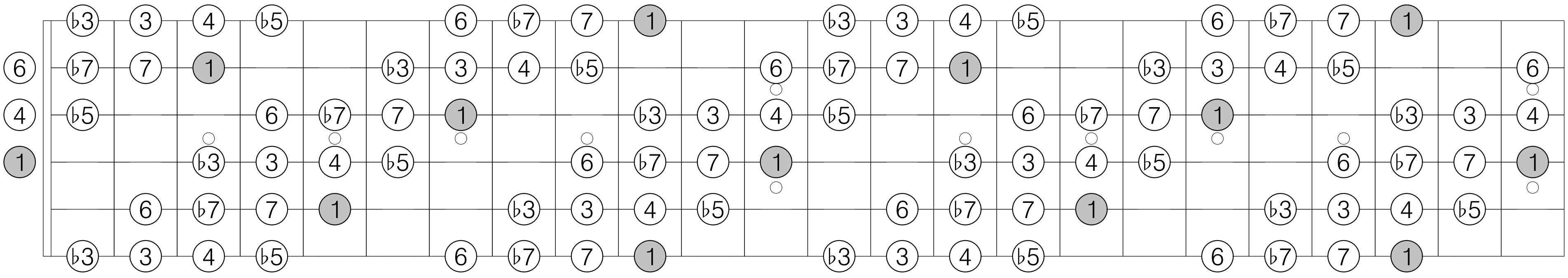

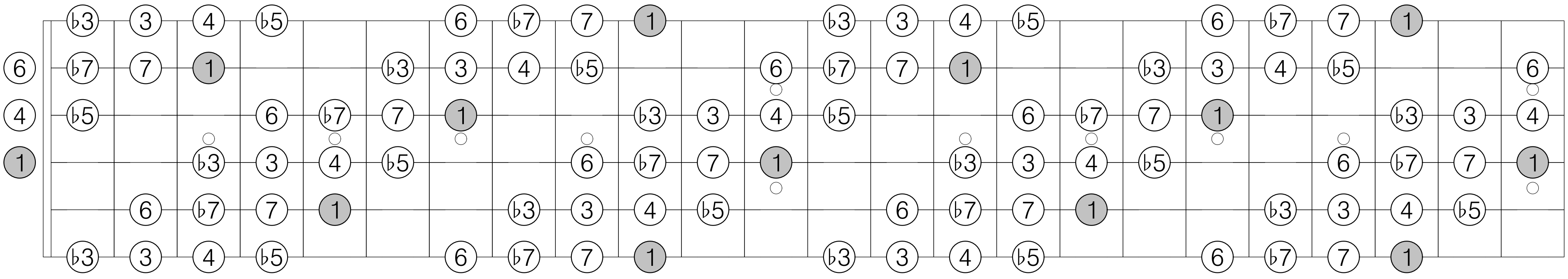

D transposition 4 of Mode 4 [1, 1, 3, 1]

1 ♭2 2 ♭3 ♭5 5 ♭6 6 1 ♭2 2 ♭3 ♭5 5 ♭6 6

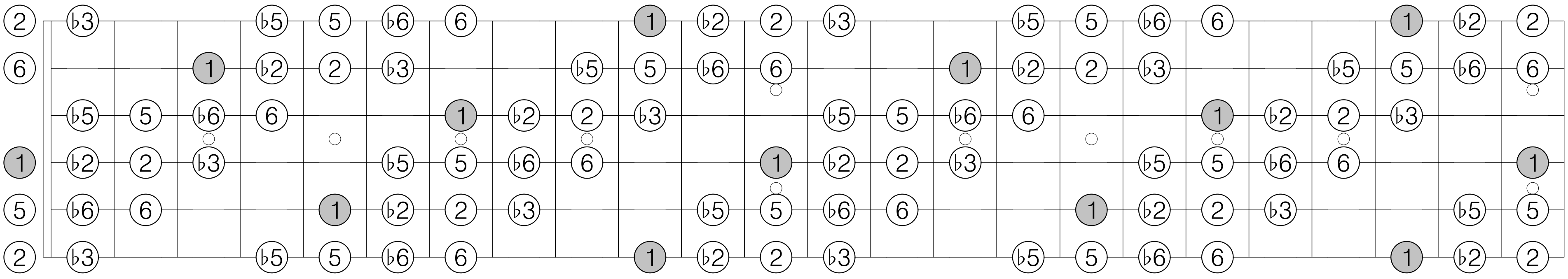

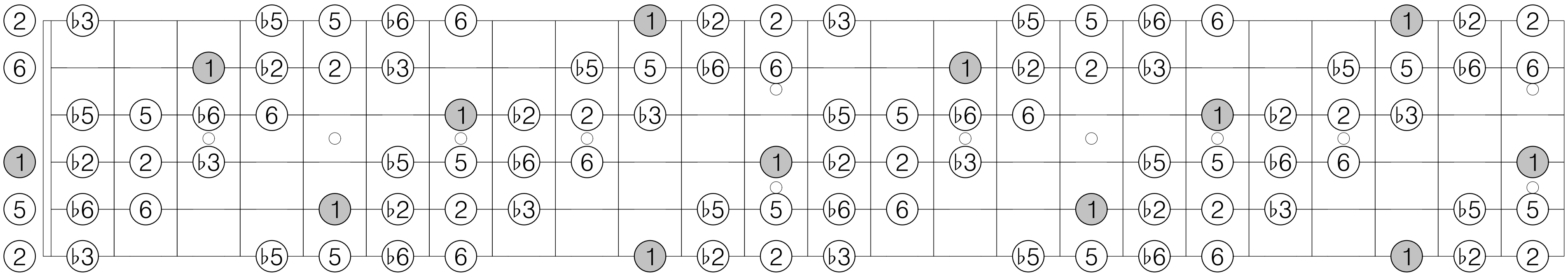

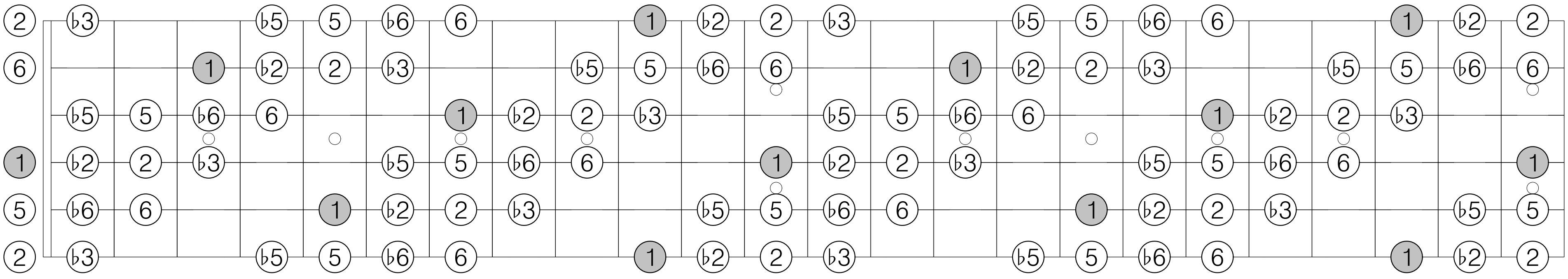

D transposition 1 of Mode 5 [1, 4, 1]

1 ♭2 4 ♭5 5 7 1 ♭2 4 ♭5 5 7

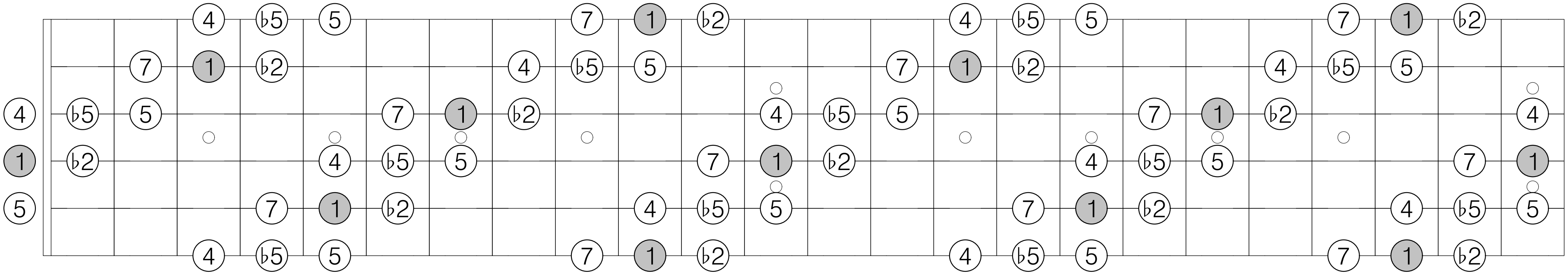

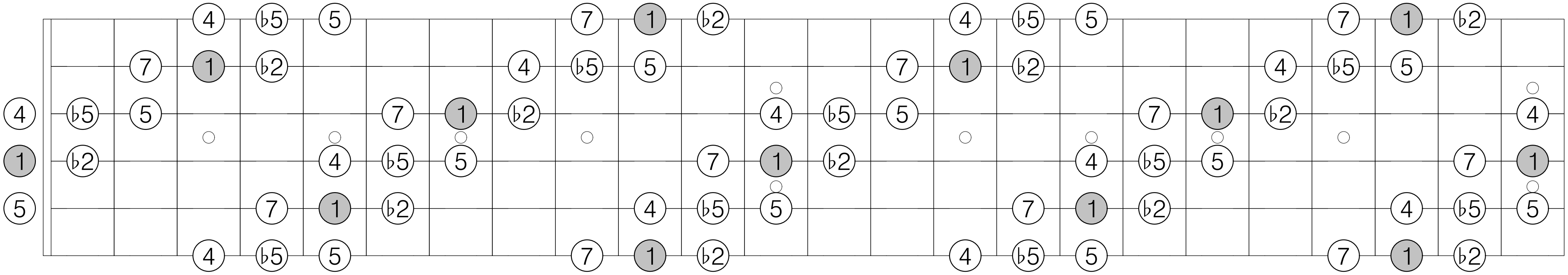

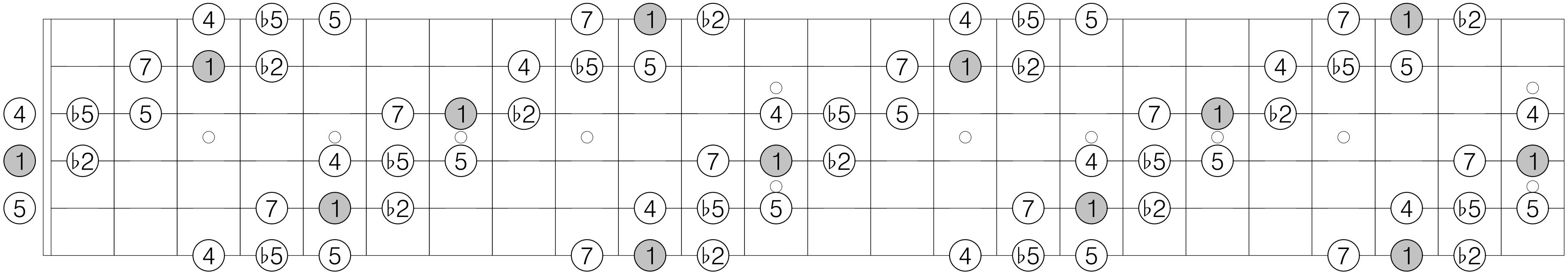

D transposition 2 of Mode 5 [1, 4, 1]

1 3 4 ♭5 ♭7 7 1 3 4 ♭5 ♭7 7

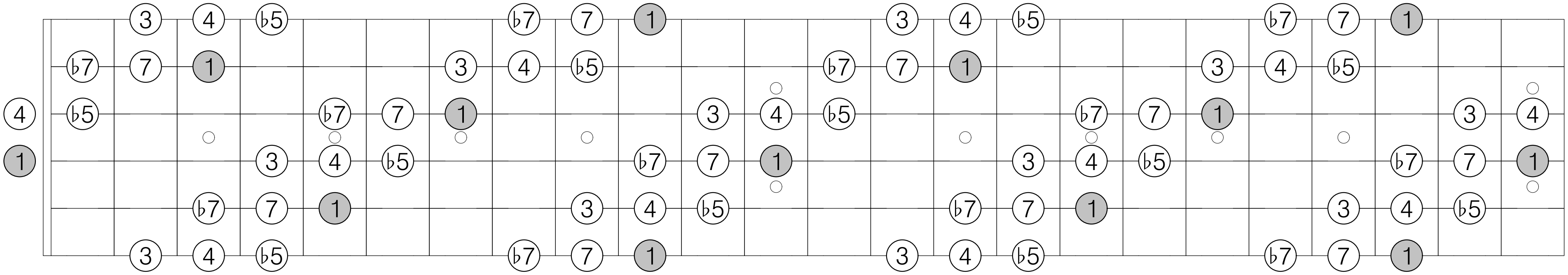

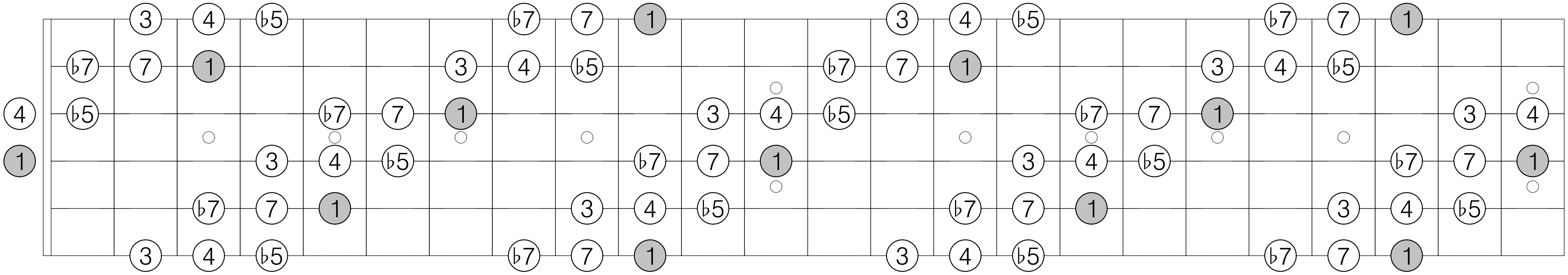

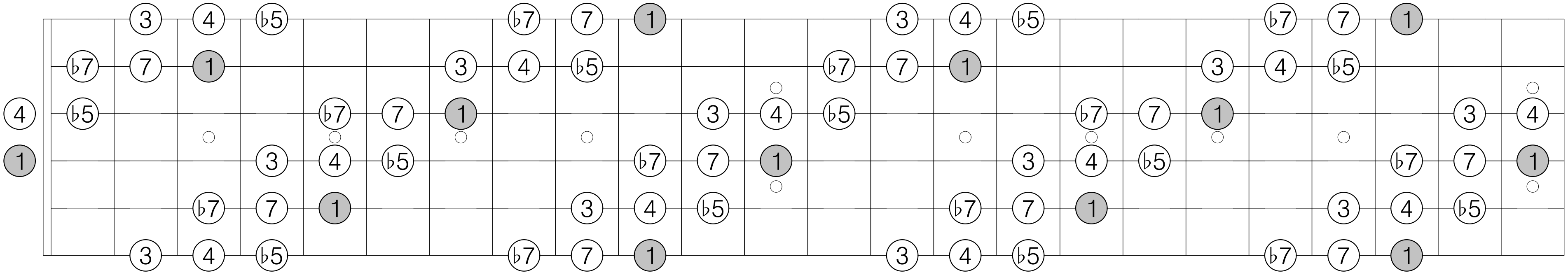

D transposition 3 of Mode 5 [1, 4, 1]

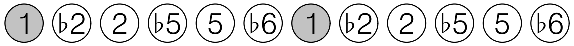

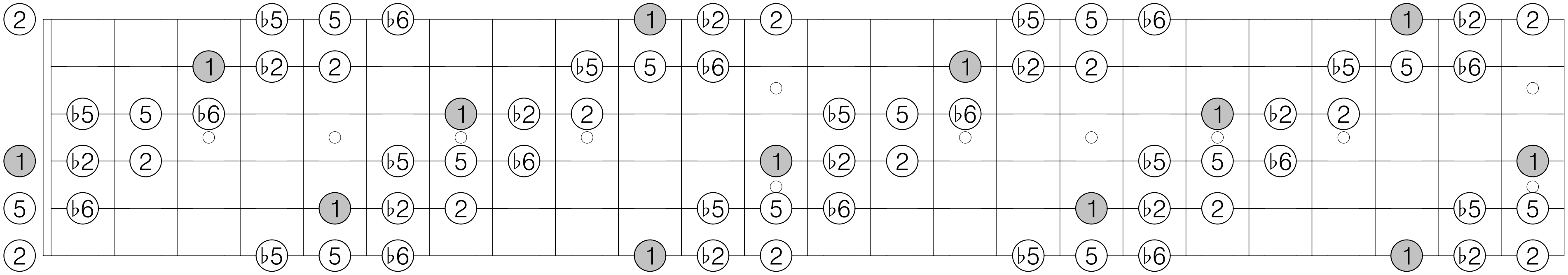

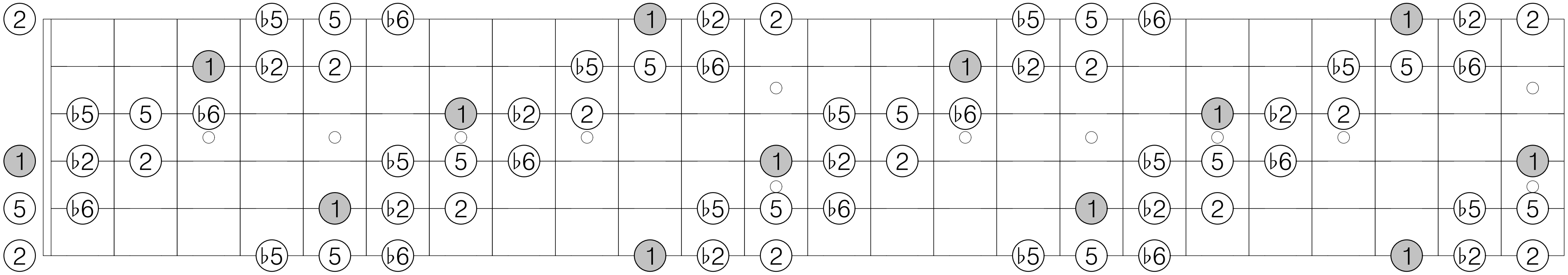

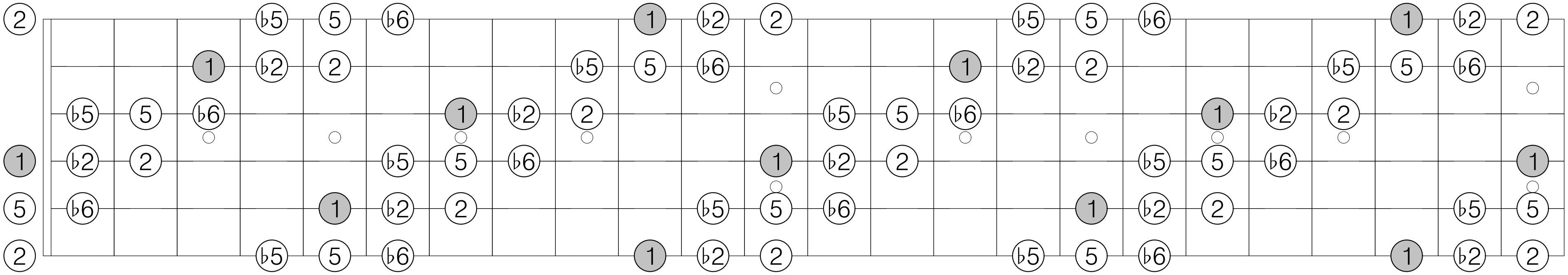

D transposition 1 of Mode 6 [1, 1, 2, 2]

1 ♭2 2 3 ♭5 5 ♭6 ♭7 1 ♭2 2 3 ♭5 5 ♭6 ♭7

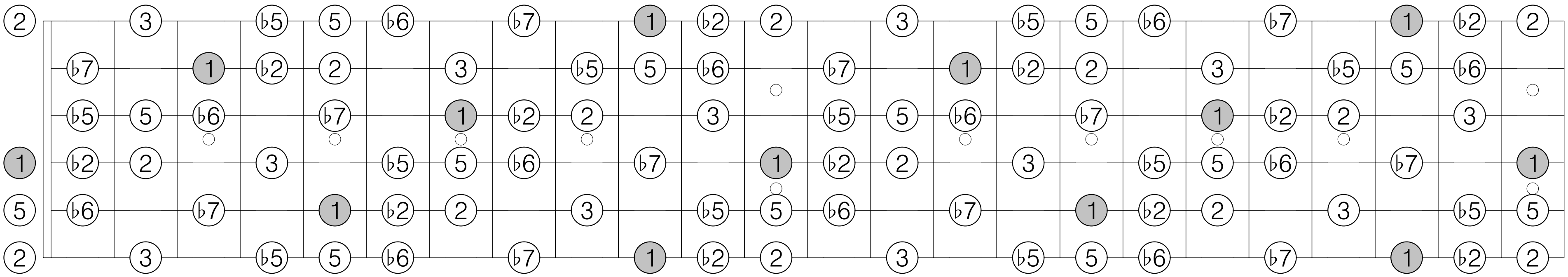

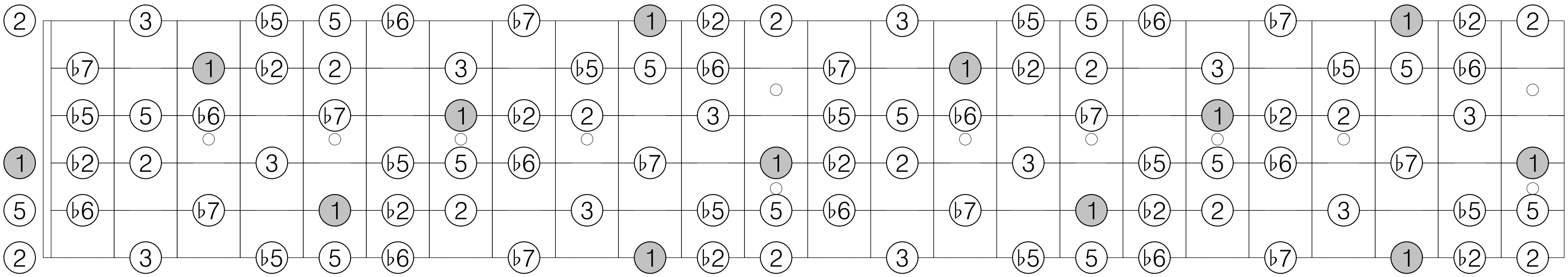

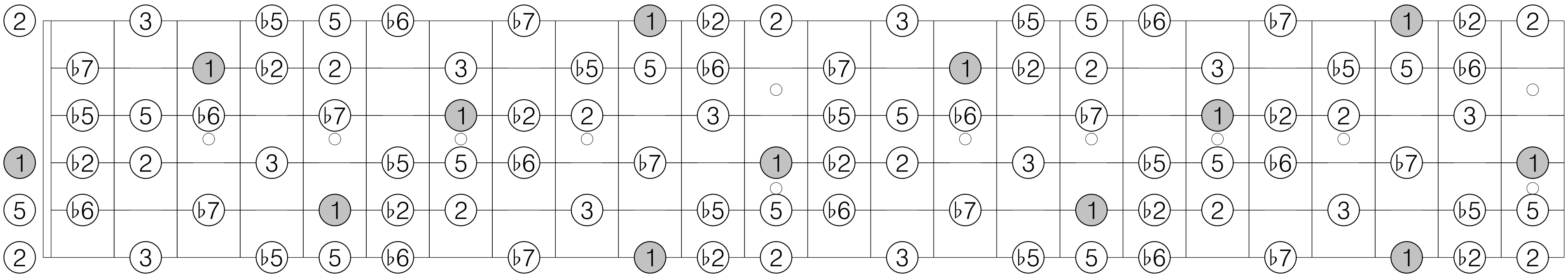

D transposition 2 of Mode 6 [1, 1, 2, 2]

1 ♭2 ♭3 4 ♭5 5 6 7 1 ♭2 ♭3 4 ♭5 5 6 7

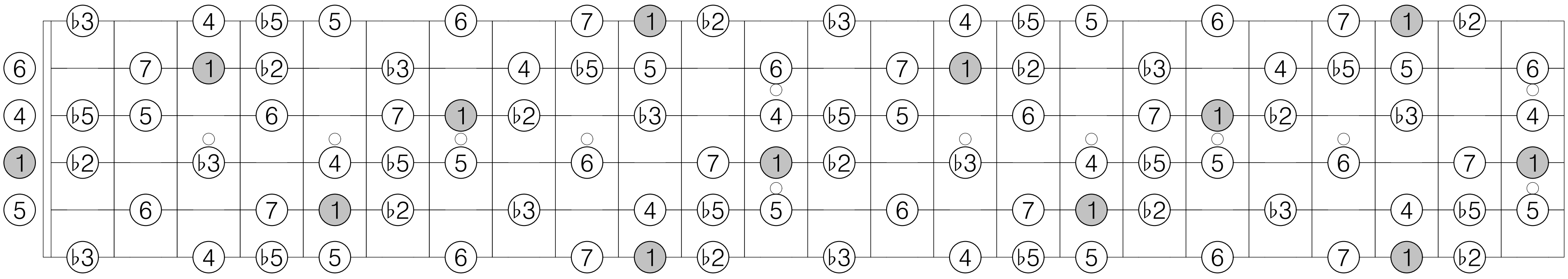

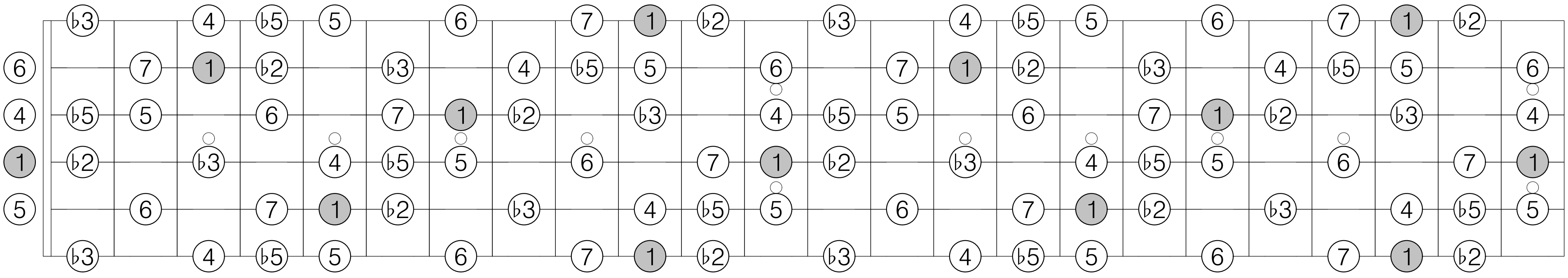

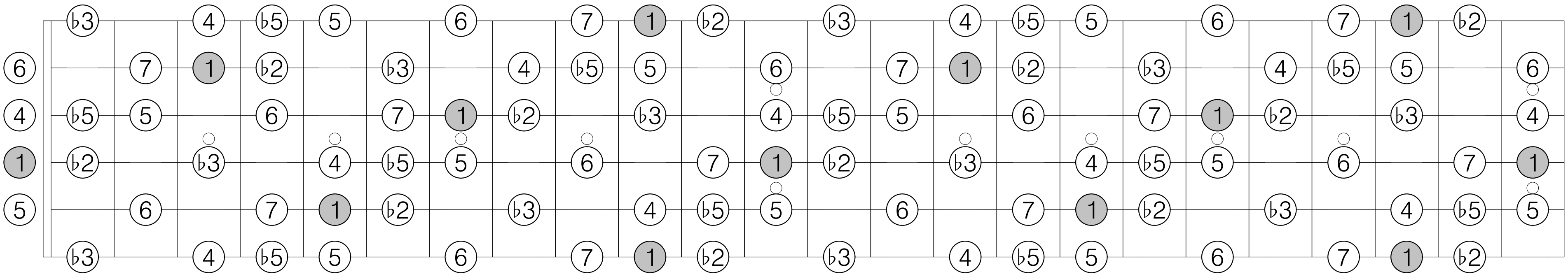

D transposition 3 of Mode 6 [1, 1, 2, 2]

1 2 3 4 ♭5 ♭6 ♭7 7 1 2 3 4 ♭5 ♭6 ♭7 7

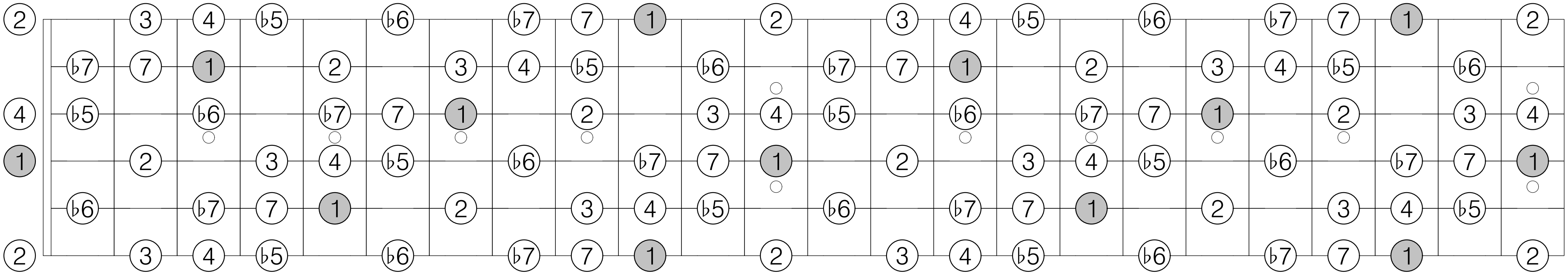

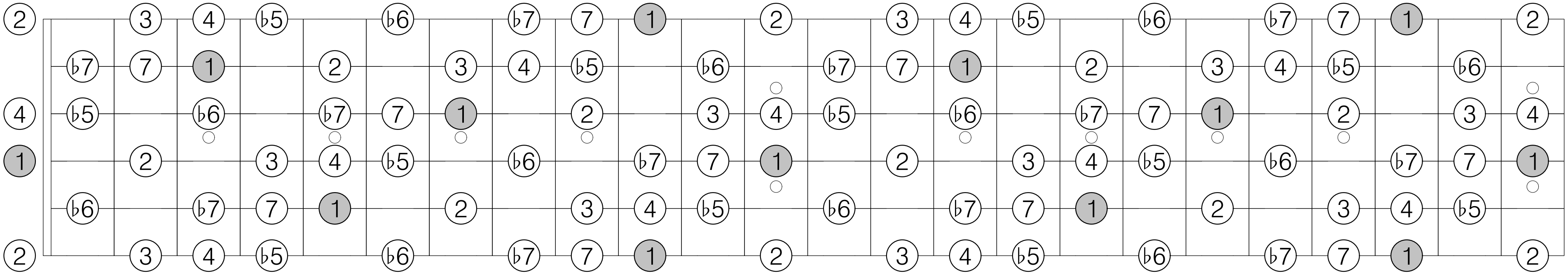

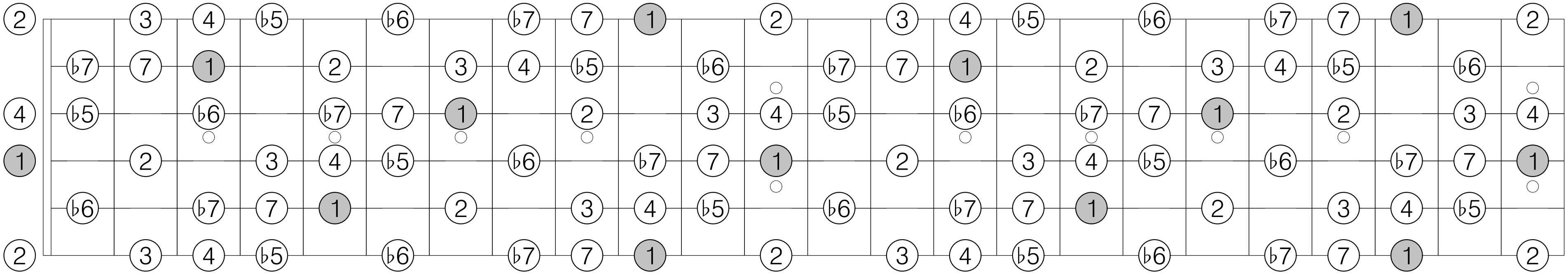

D transposition 4 of Mode 6 [1, 1, 2, 2]

1 2 ♭3 3 ♭5 ♭6 6 ♭7 1 2 ♭3 3 ♭5 ♭6 6 ♭7

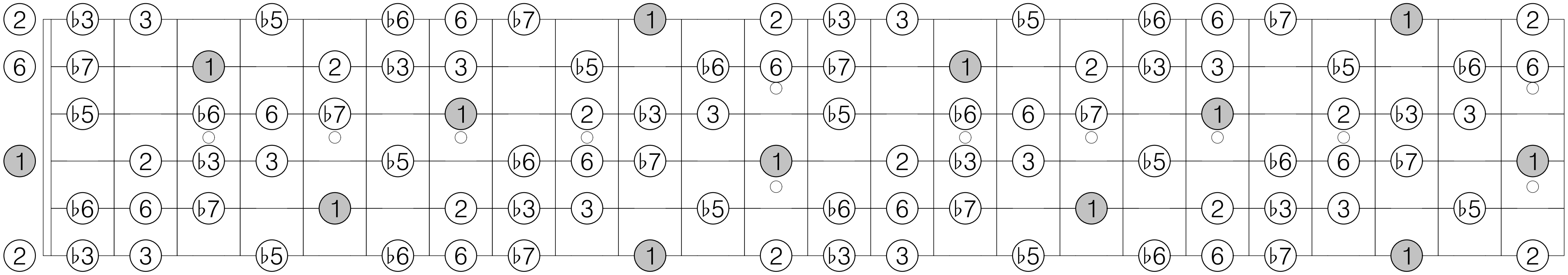

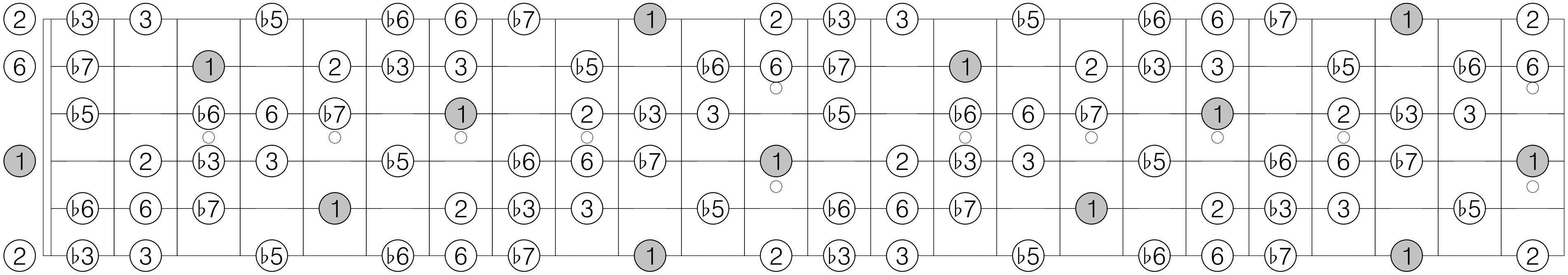

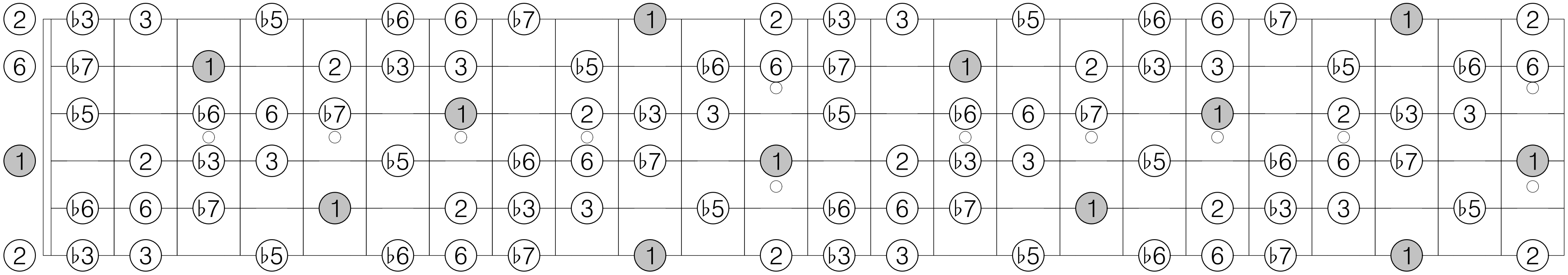

D transposition 1 of Mode 7 [1, 1, 1, 2, 1]

1 ♭2 2 ♭3 4 ♭5 5 ♭6 6 7 1 ♭2 2 ♭3 4 ♭5 5 ♭6 6 7

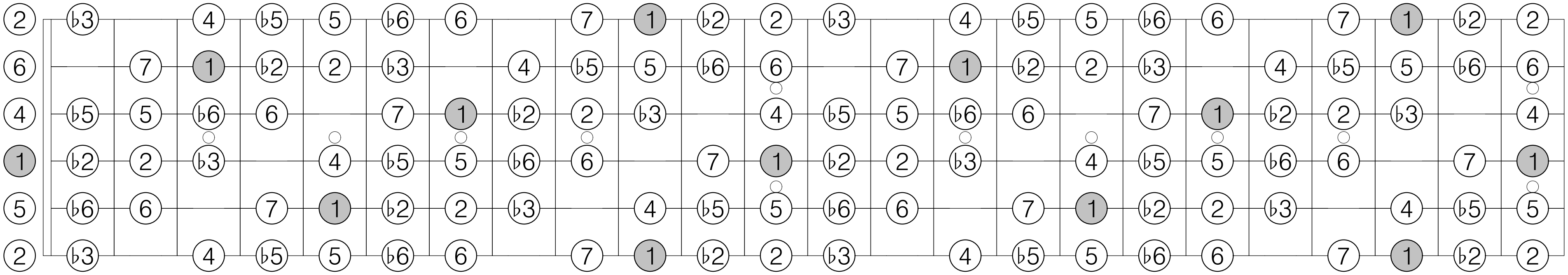

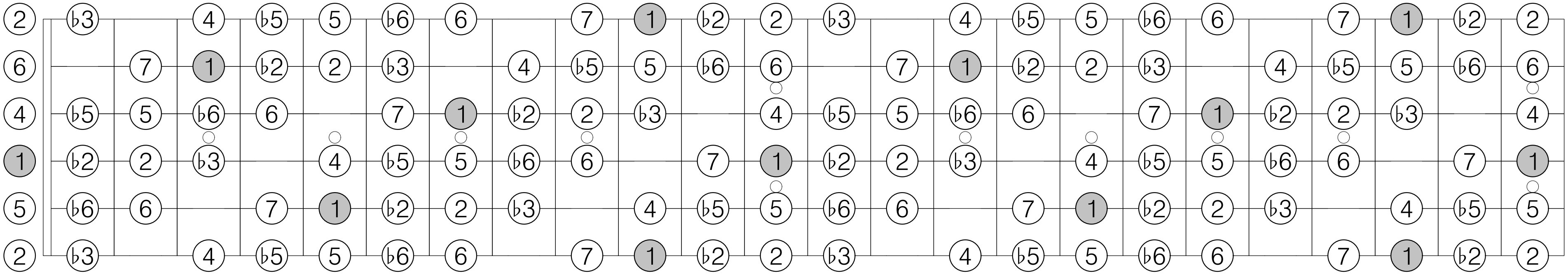

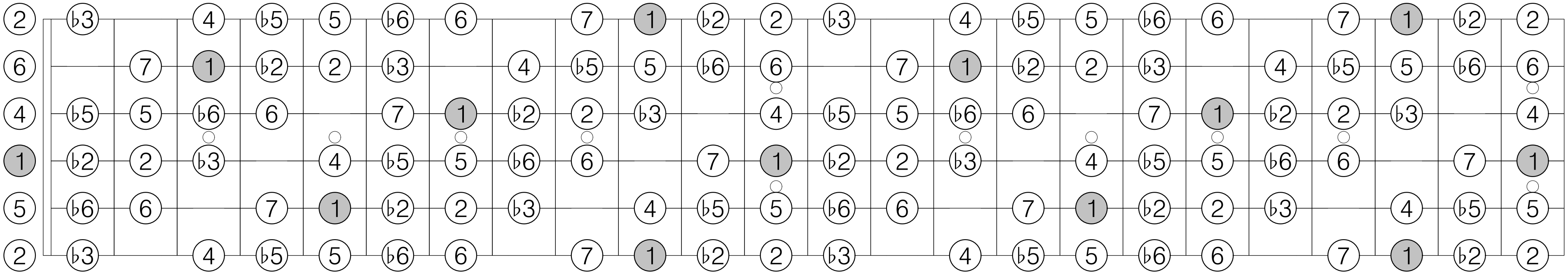

D transposition 2 of Mode 7 [1, 1, 1, 2, 1]

1 ♭2 2 3 4 ♭5 5 ♭6 ♭7 7 1 ♭2 2 3 4 ♭5 5 ♭6 ♭7 7

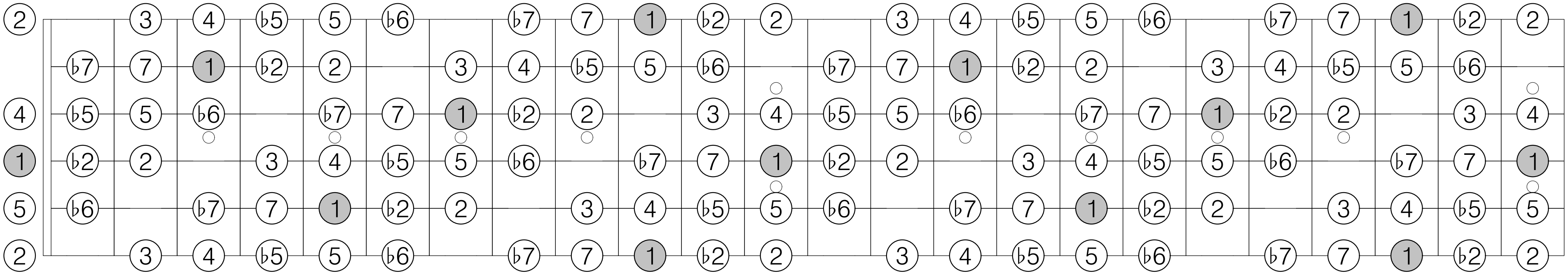

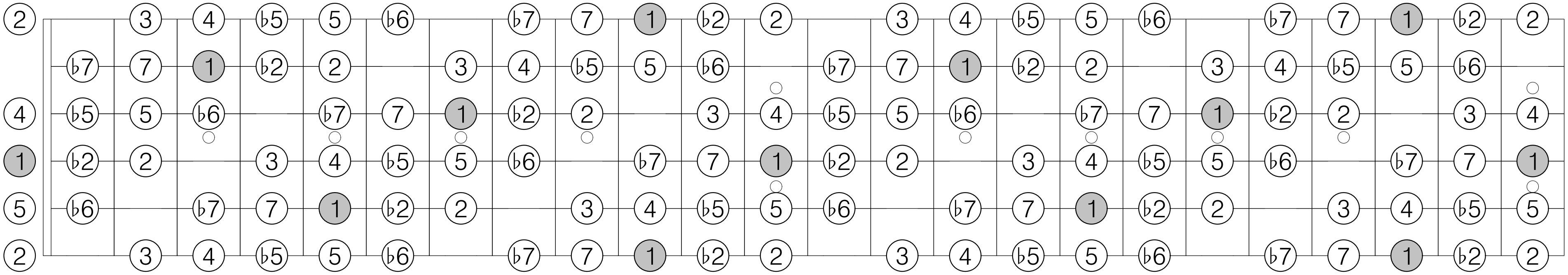

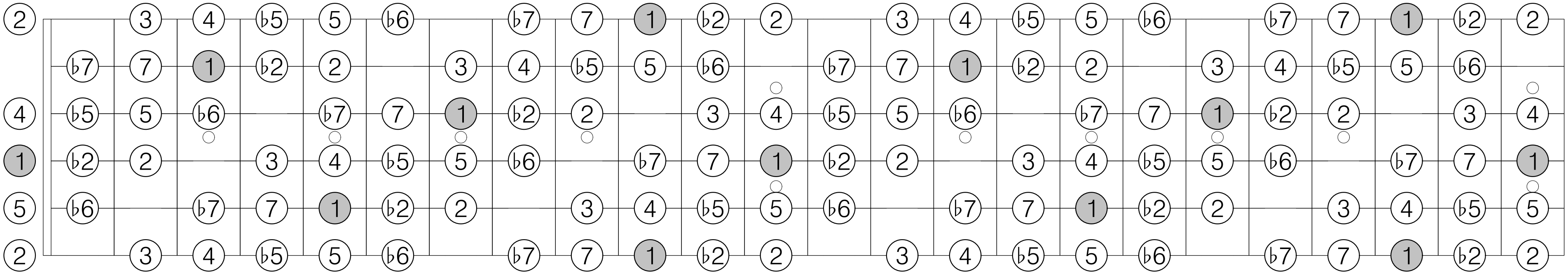

D transposition 3 of Mode 7 [1, 1, 1, 2, 1]

1 ♭2 ♭3 3 4 ♭5 5 6 ♭7 7 1 ♭2 ♭3 3 4 ♭5 5 6 ♭7 7

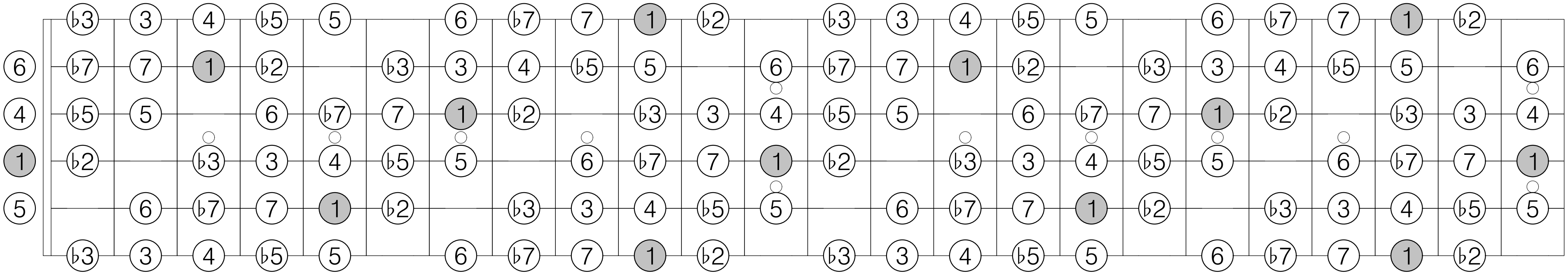

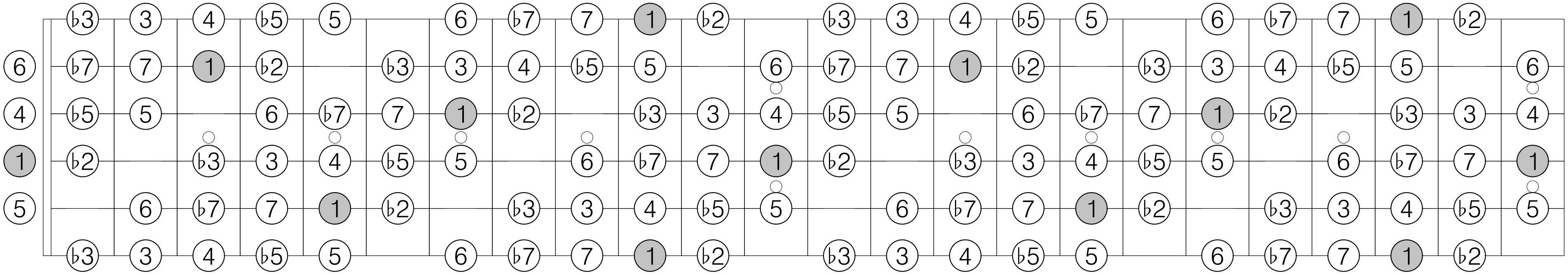

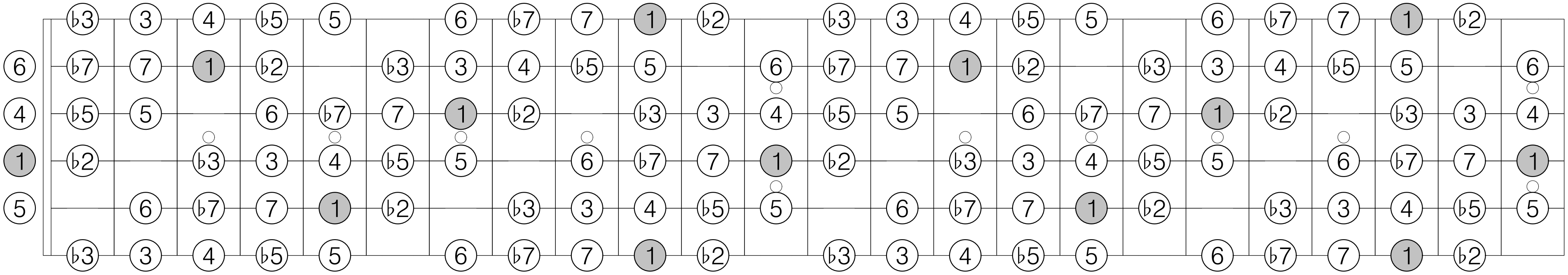

D transposition 4 of Mode 7 [1, 1, 1, 2, 1]

1 2 ♭3 3 4 ♭5 ♭6 6 ♭7 7 1 2 ♭3 3 4 ♭5 ♭6 6 ♭7 7

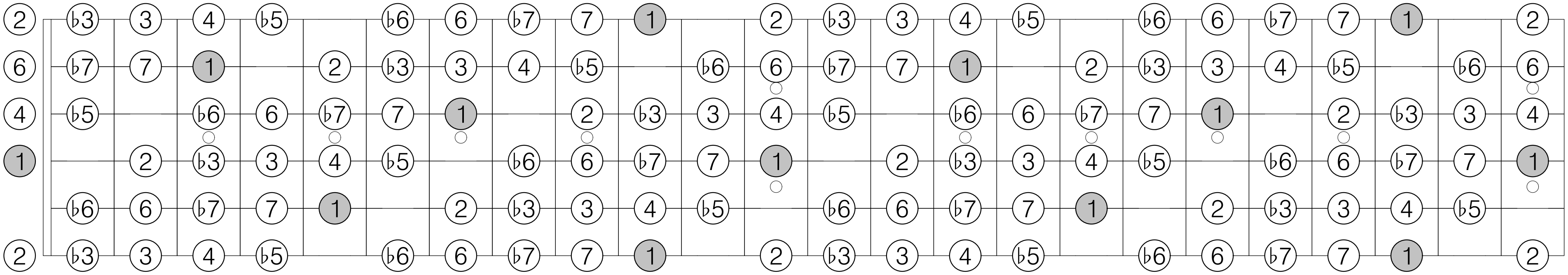

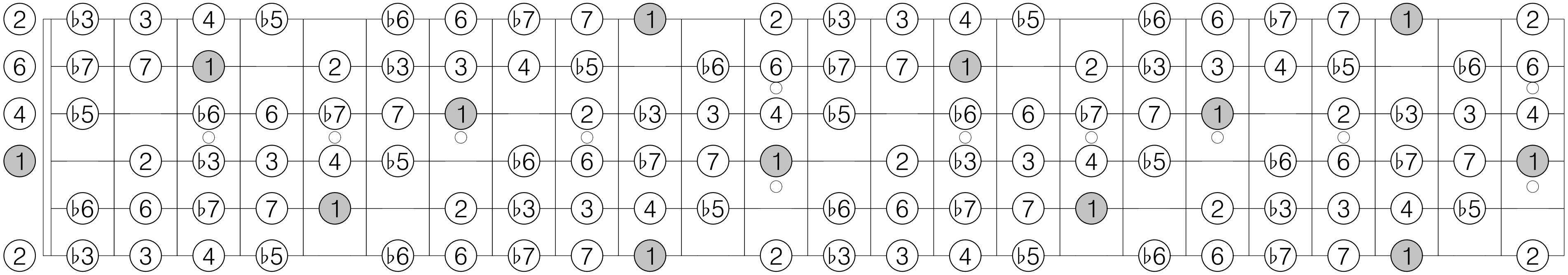

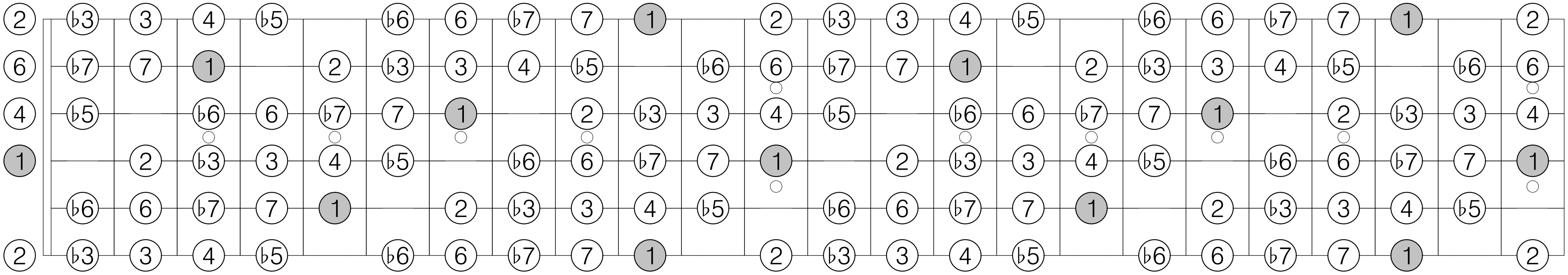

D transposition 5 of Mode 7 [1, 1, 1, 2, 1]

1 ♭2 2 ♭3 3 ♭5 5 ♭6 6 ♭7 1 ♭2 2 ♭3 3 ♭5 5 ♭6 6 ♭7

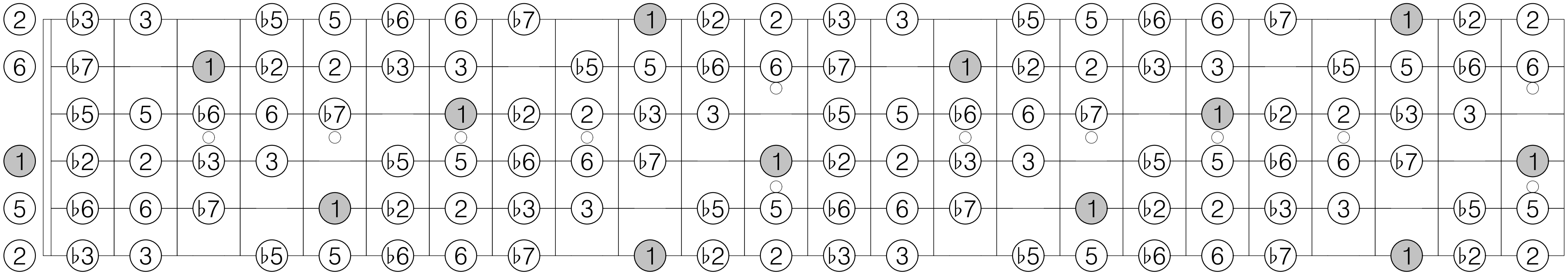

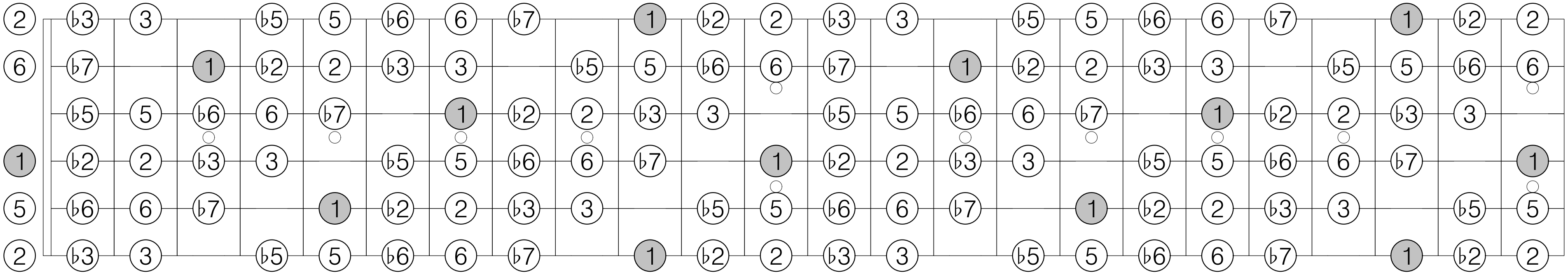

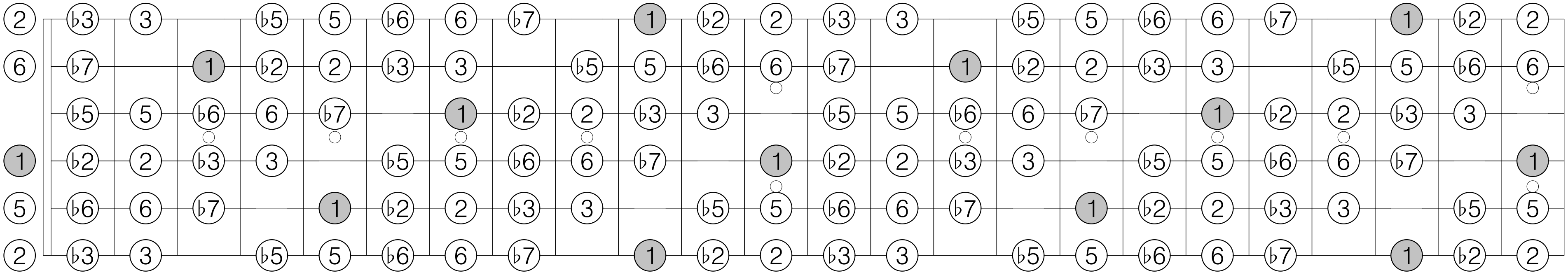

Eb transposition 1 of Mode 1 [2]

1 2 3 ♭5 ♭6 ♭7 1 2 3 ♭5 ♭6 ♭7

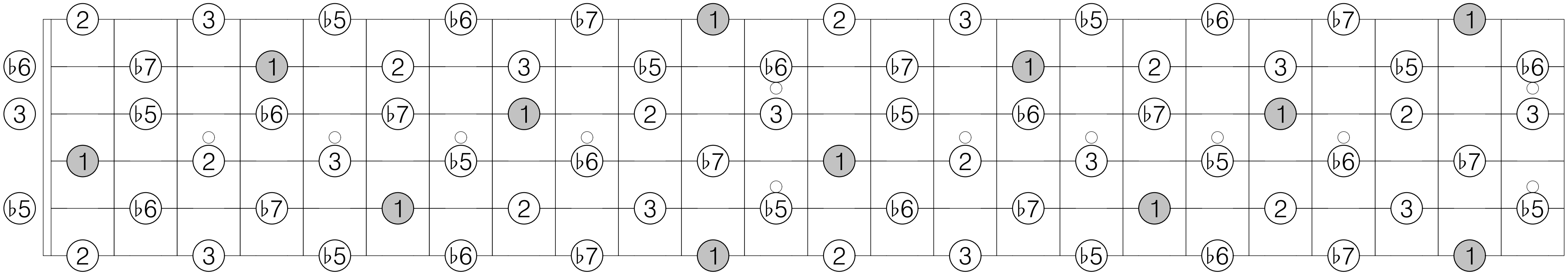

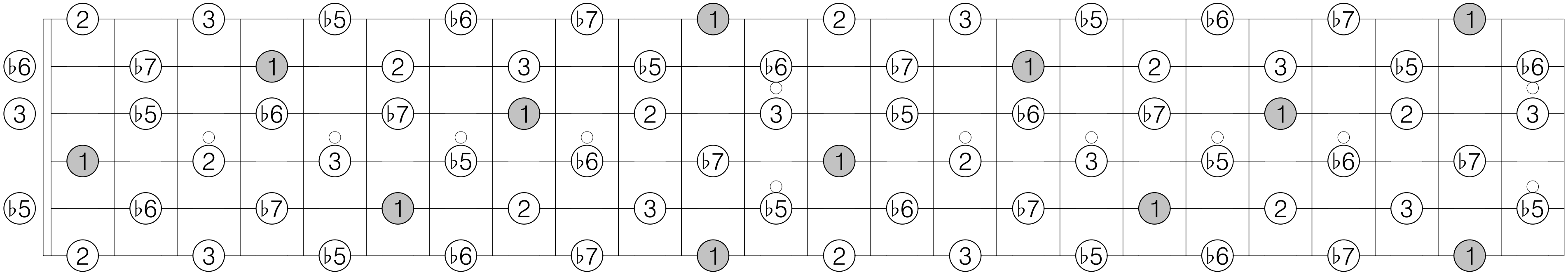

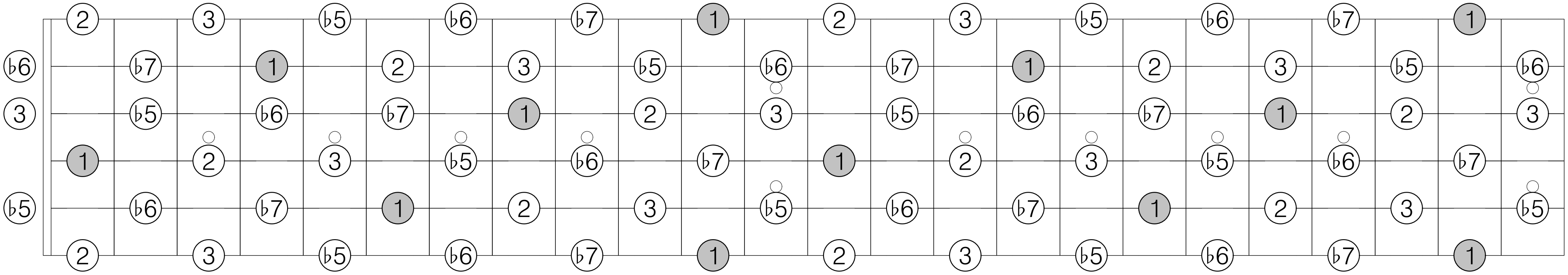

Eb transposition 1 of Mode 2 [1, 2]

1 ♭2 ♭3 3 ♭5 5 6 ♭7 1 ♭2 ♭3 3 ♭5 5 6 ♭7

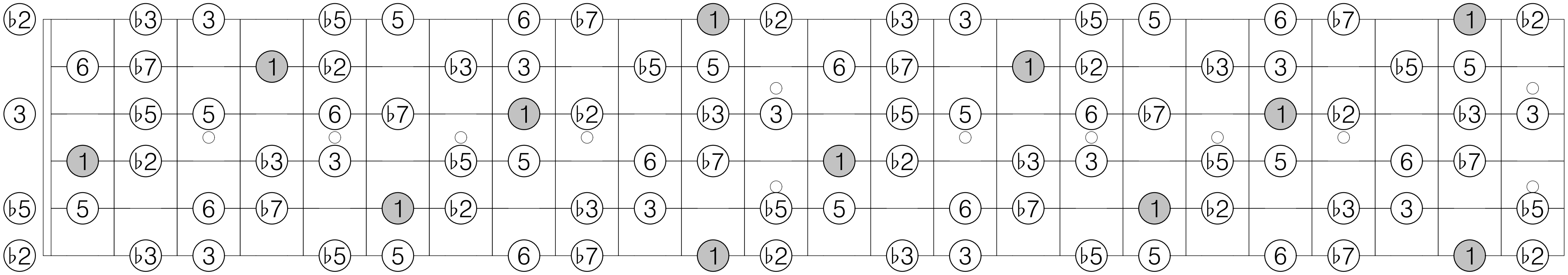

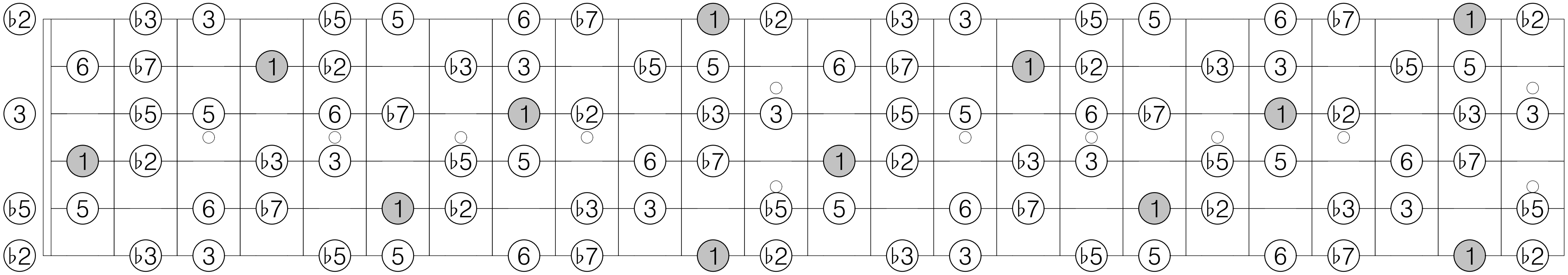

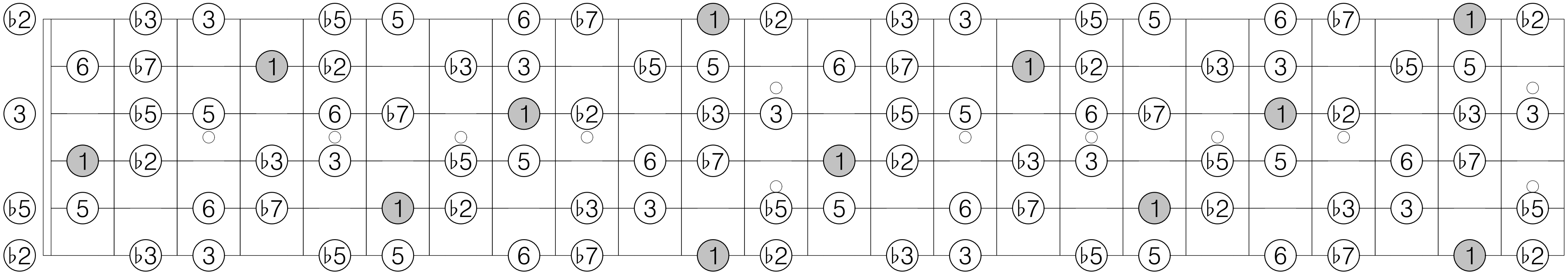

Eb transposition 2 of Mode 2 [1, 2]

1 2 ♭3 4 ♭5 ♭6 6 7 1 2 ♭3 4 ♭5 ♭6 6 7

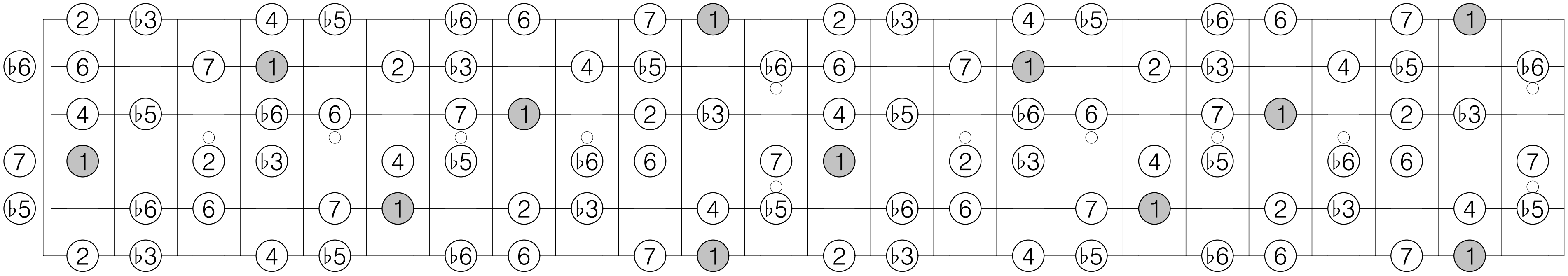

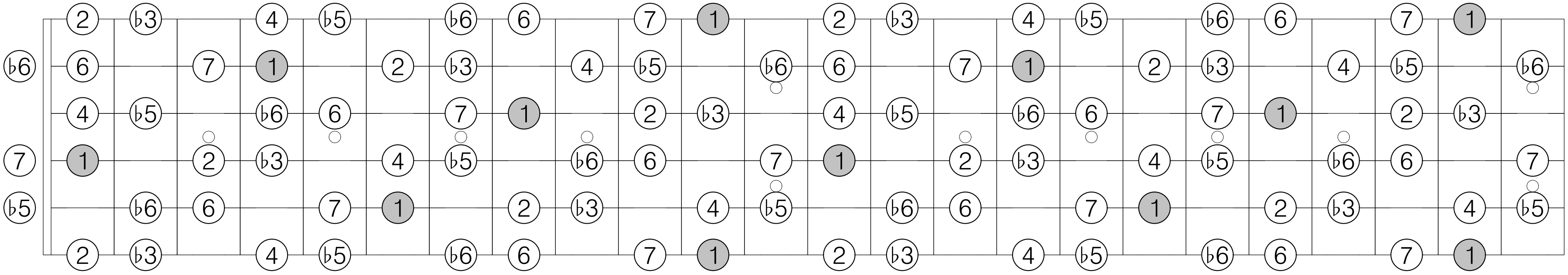

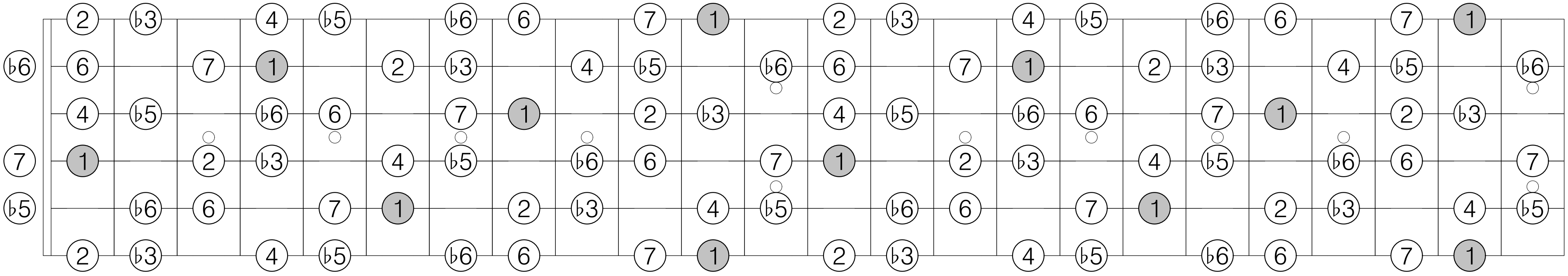

Eb transposition 1 of Mode 3 [1, 1, 2]

1 ♭2 2 3 4 ♭5 ♭6 6 ♭7 1 ♭2 2 3 4 ♭5 ♭6 6 ♭7

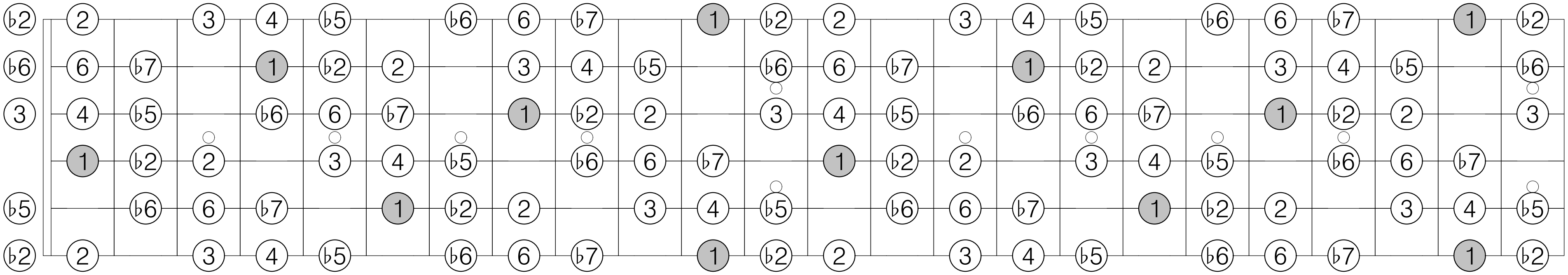

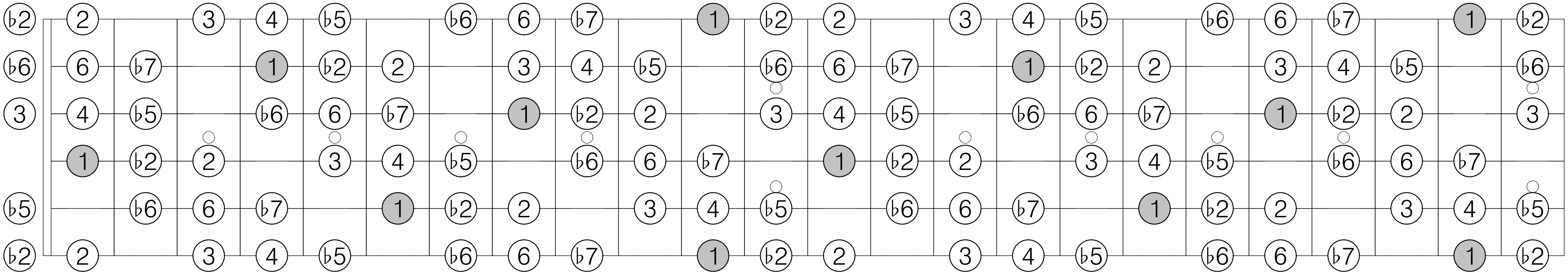

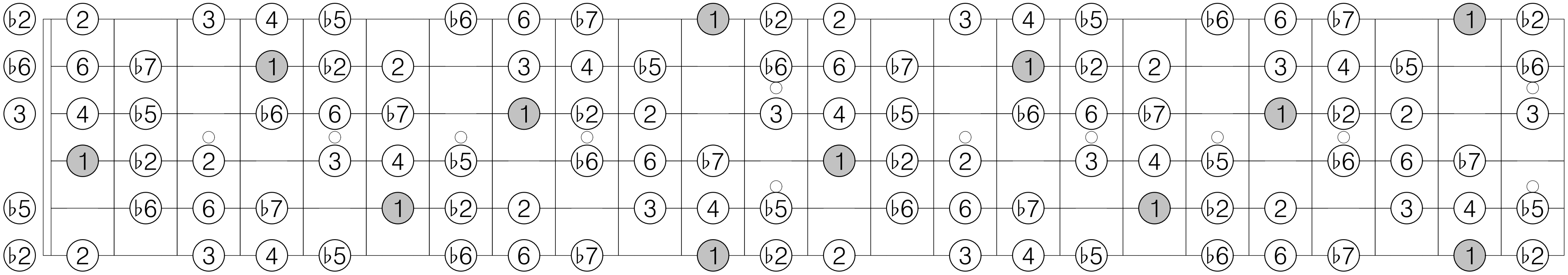

Eb transposition 2 of Mode 3 [1, 1, 2]

1 ♭2 ♭3 3 4 5 ♭6 6 7 1 ♭2 ♭3 3 4 5 ♭6 6 7

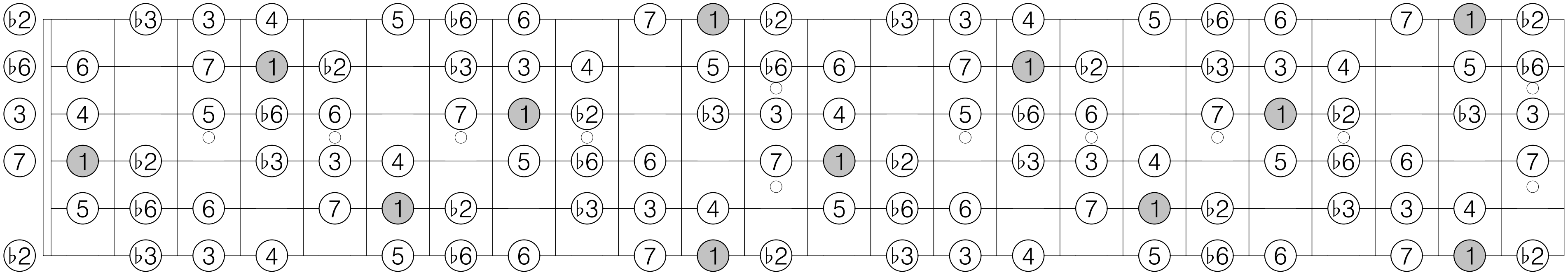

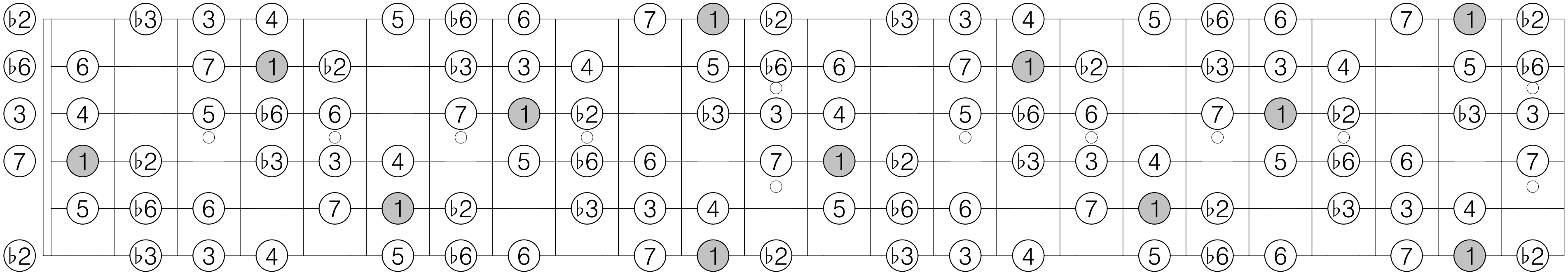

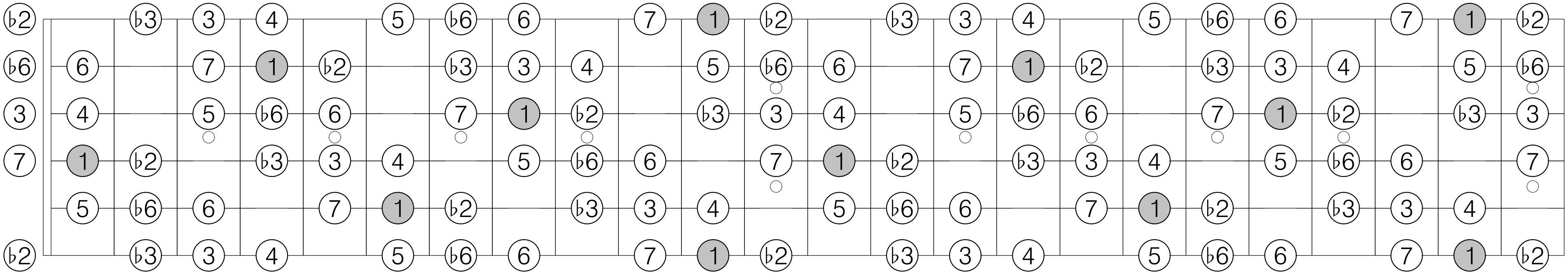

Eb transposition 3 of Mode 3 [1, 1, 2]

1 2 ♭3 3 ♭5 5 ♭6 ♭7 7 1 2 ♭3 3 ♭5 5 ♭6 ♭7 7

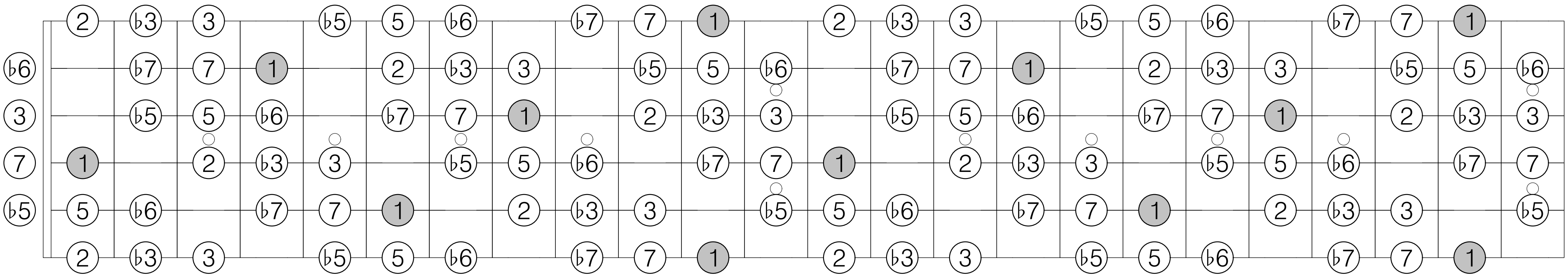

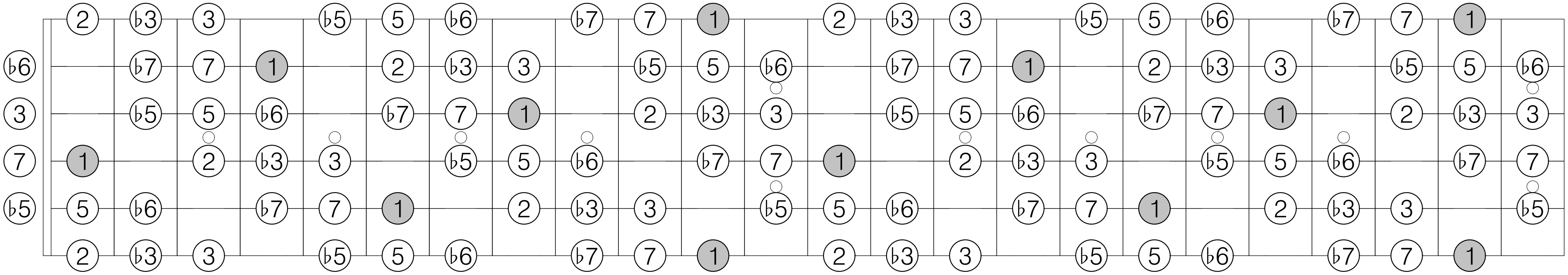

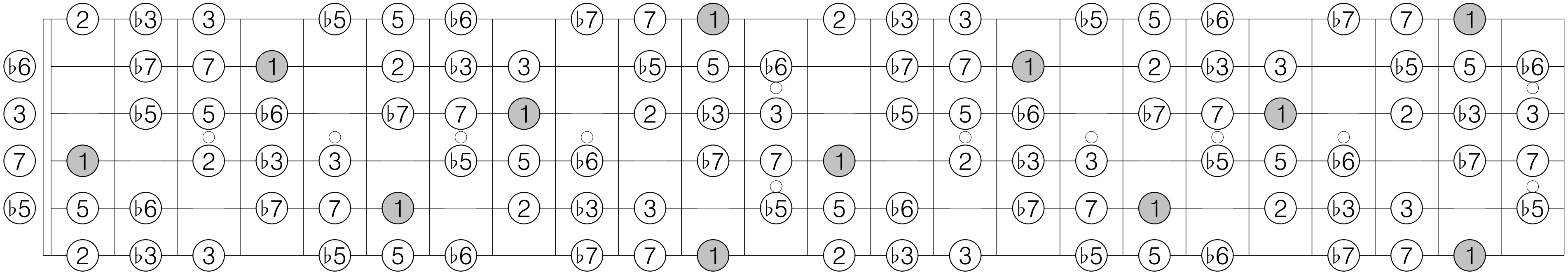

Eb transposition 1 of Mode 4 [1, 1, 3, 1]

1 ♭2 2 4 ♭5 5 ♭6 7 1 ♭2 2 4 ♭5 5 ♭6 7

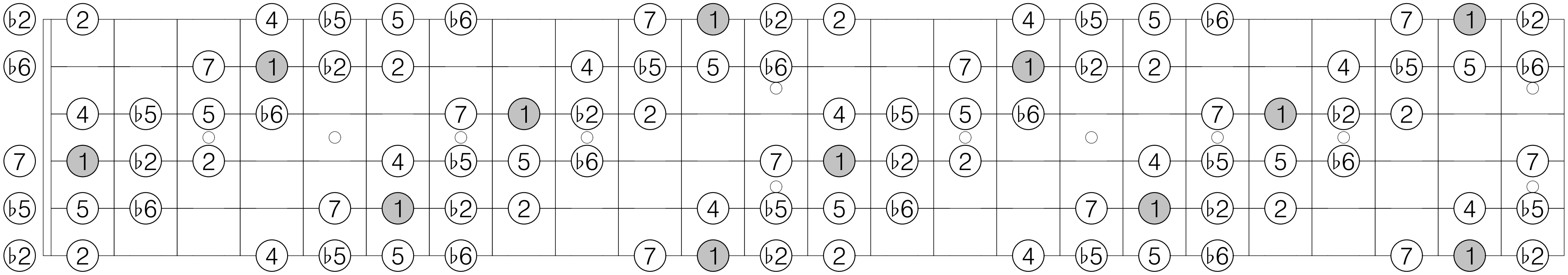

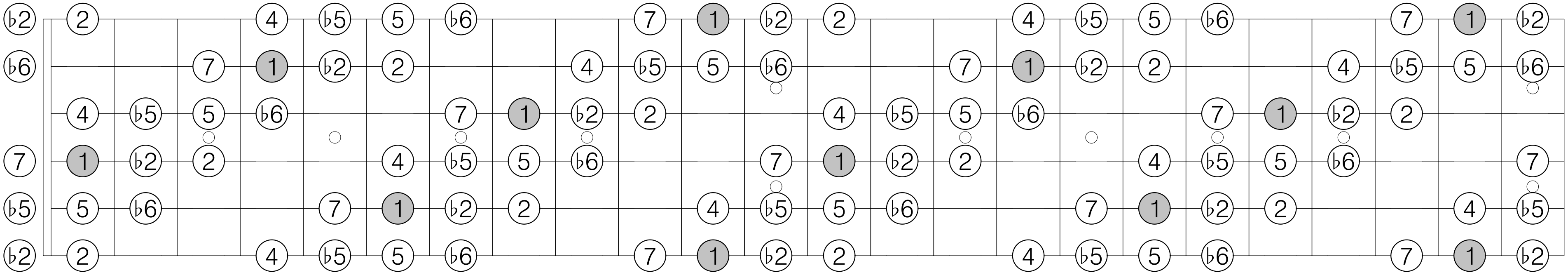

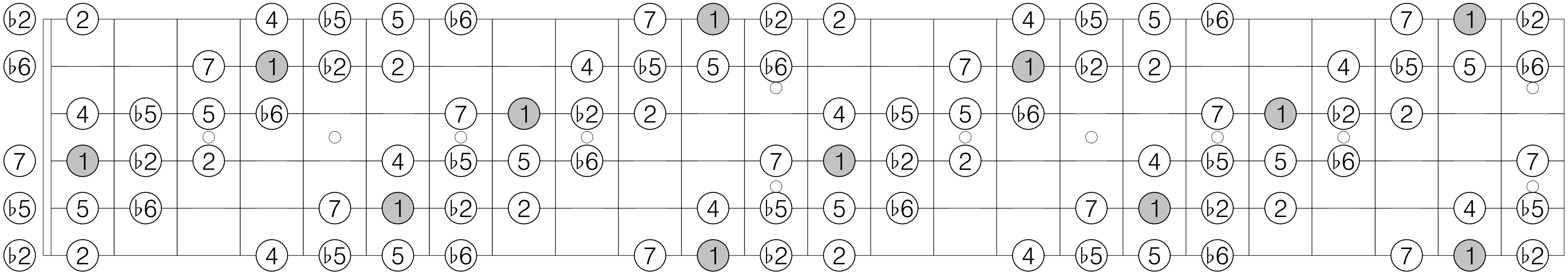

Eb transposition 2 of Mode 4 [1, 1, 3, 1]

1 ♭2 3 4 ♭5 5 ♭7 7 1 ♭2 3 4 ♭5 5 ♭7 7

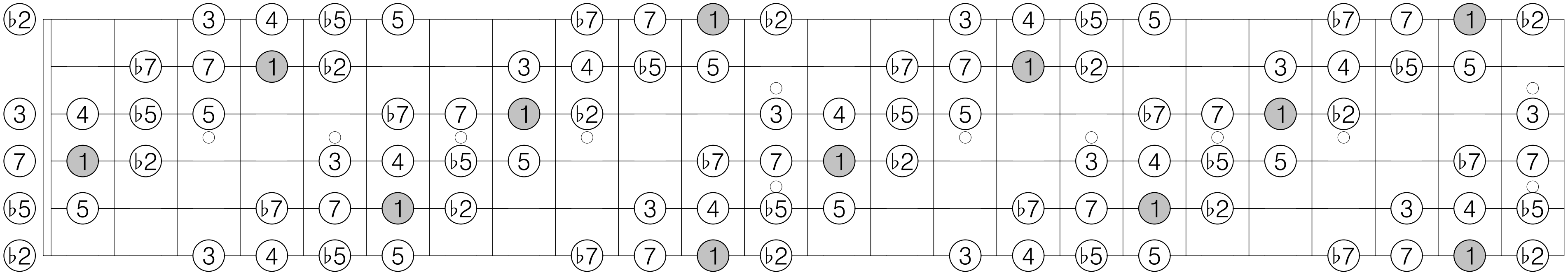

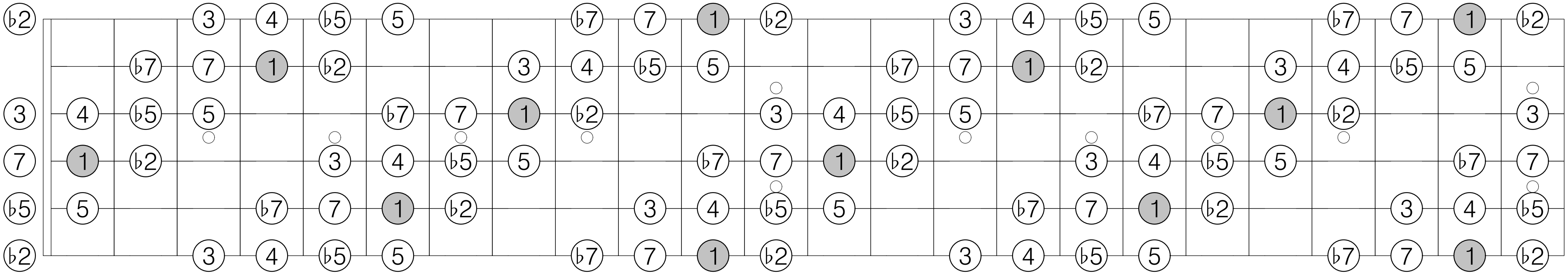

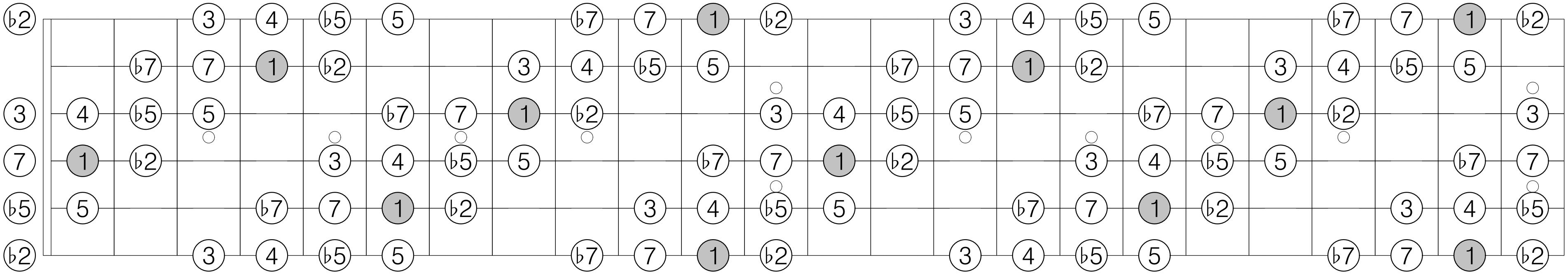

Eb transposition 3 of Mode 4 [1, 1, 3, 1]

1 ♭3 3 4 ♭5 6 ♭7 7 1 ♭3 3 4 ♭5 6 ♭7 7

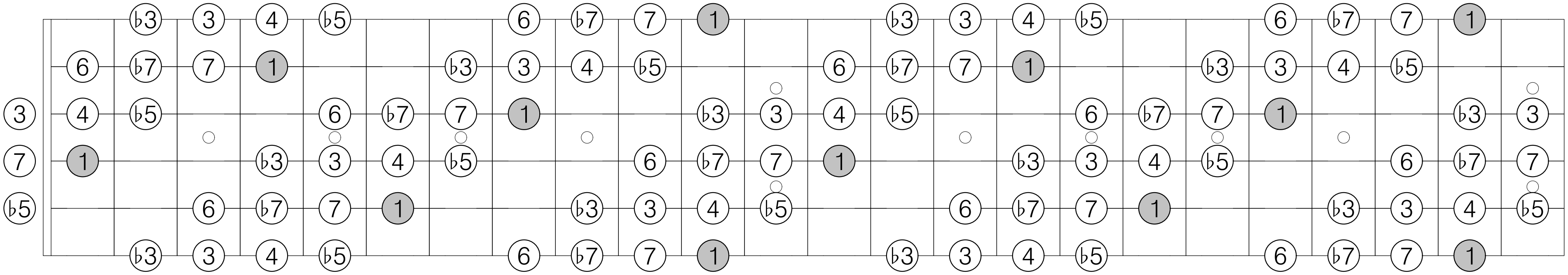

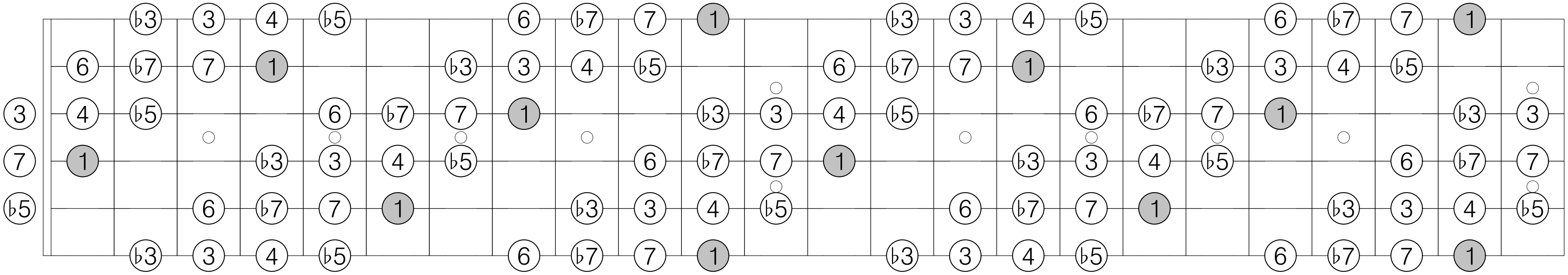

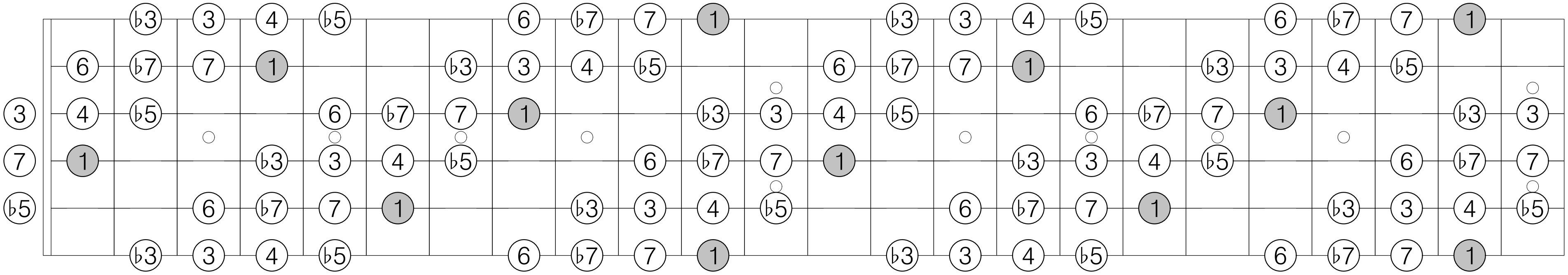

Eb transposition 4 of Mode 4 [1, 1, 3, 1]

1 ♭2 2 ♭3 ♭5 5 ♭6 6 1 ♭2 2 ♭3 ♭5 5 ♭6 6

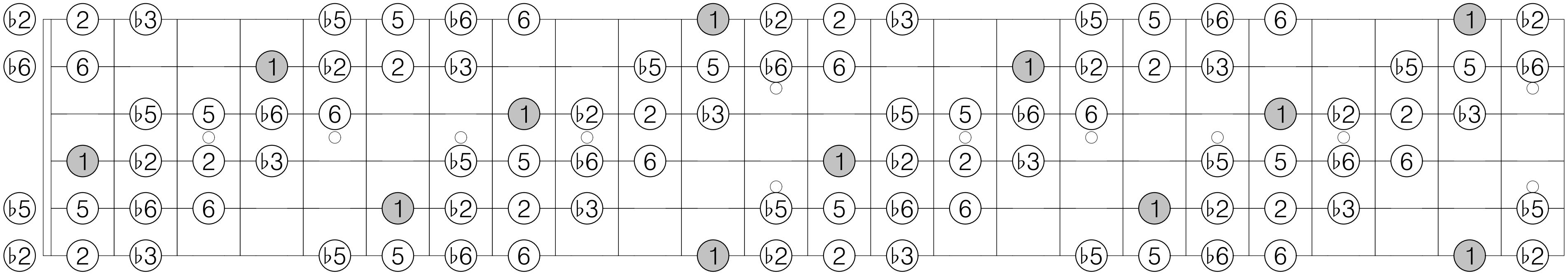

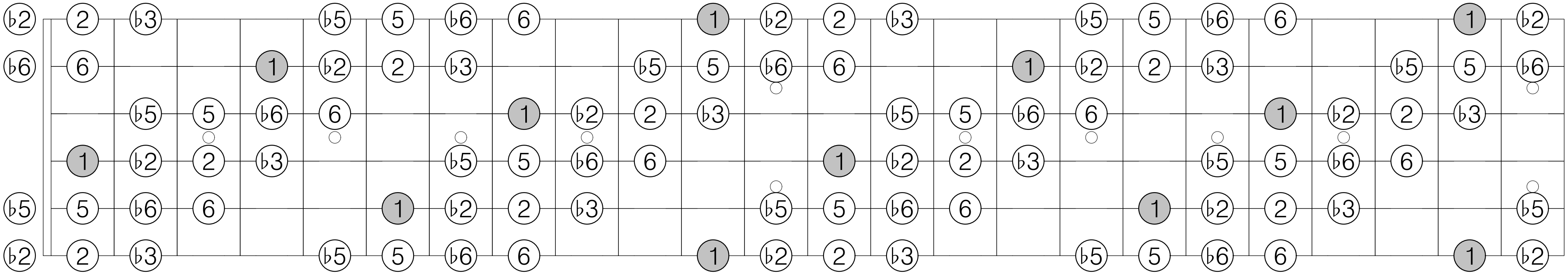

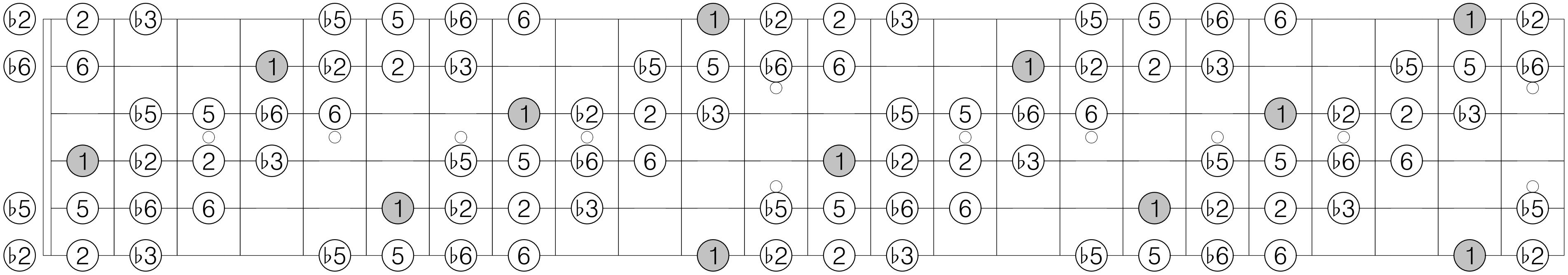

Eb transposition 1 of Mode 5 [1, 4, 1]

1 ♭2 4 ♭5 5 7 1 ♭2 4 ♭5 5 7

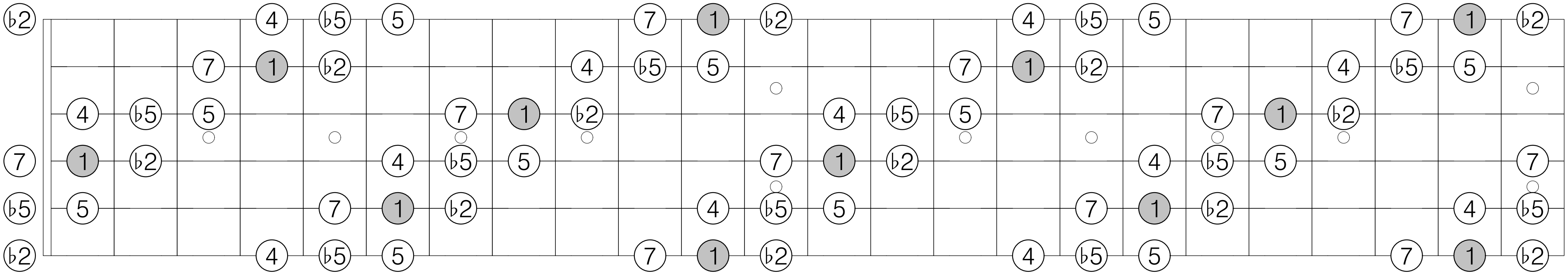

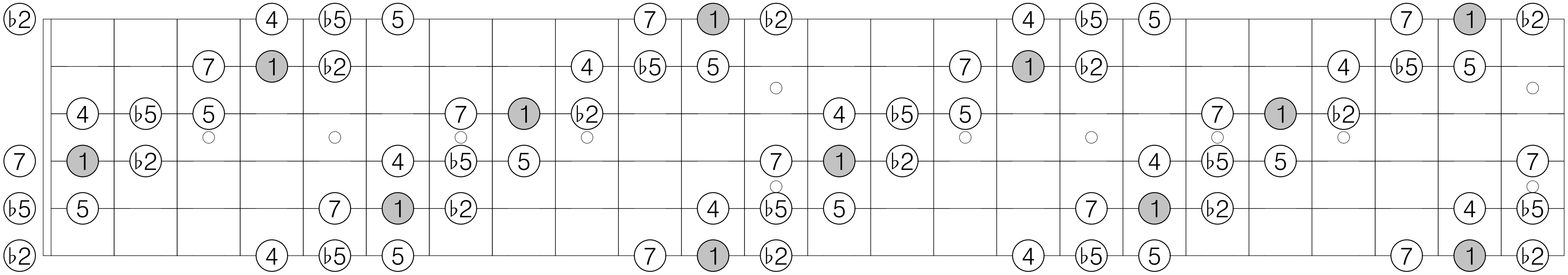

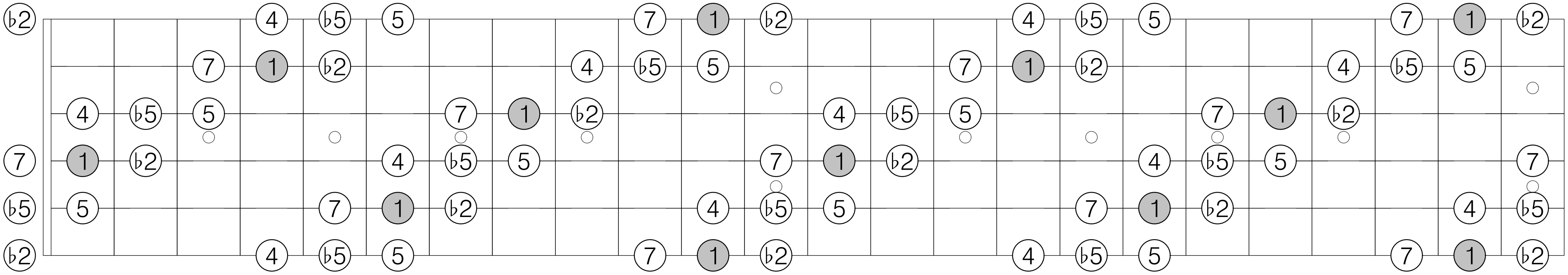

Eb transposition 2 of Mode 5 [1, 4, 1]

1 3 4 ♭5 ♭7 7 1 3 4 ♭5 ♭7 7

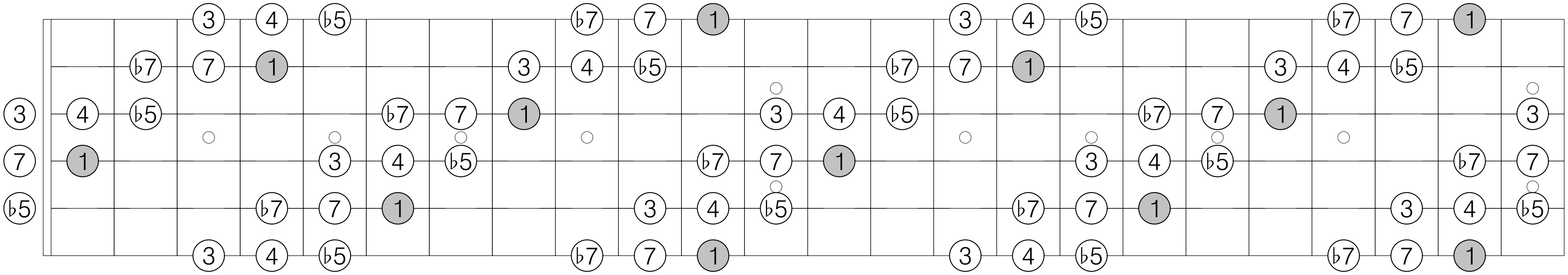

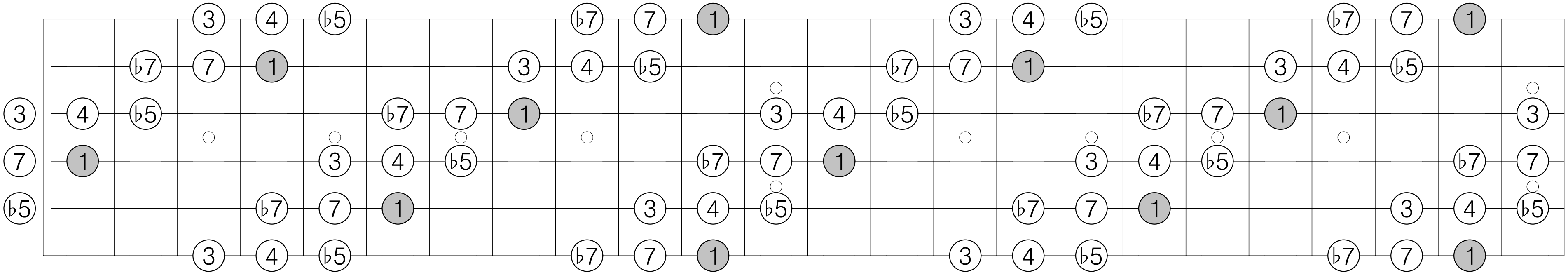

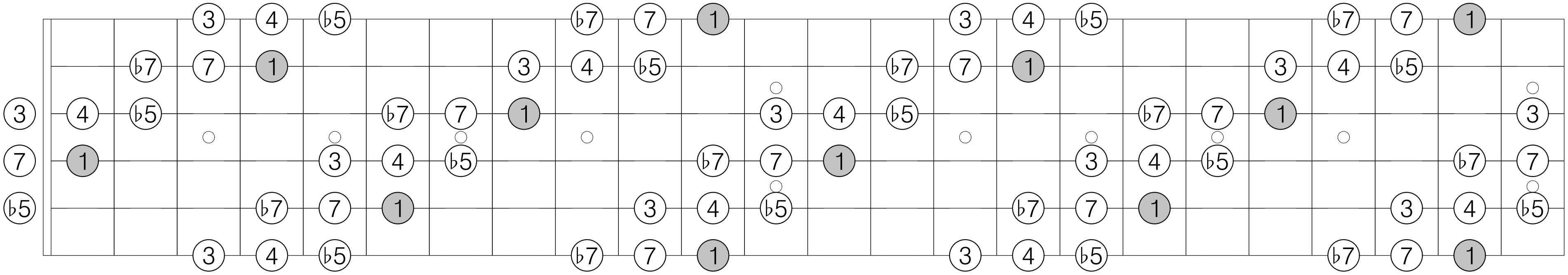

Eb transposition 3 of Mode 5 [1, 4, 1]

1 ♭2 2 ♭5 5 ♭6 1 ♭2 2 ♭5 5 ♭6

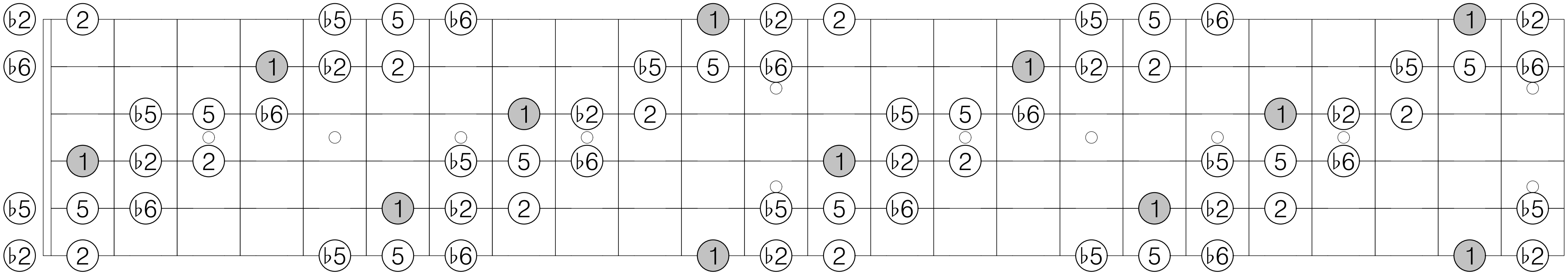

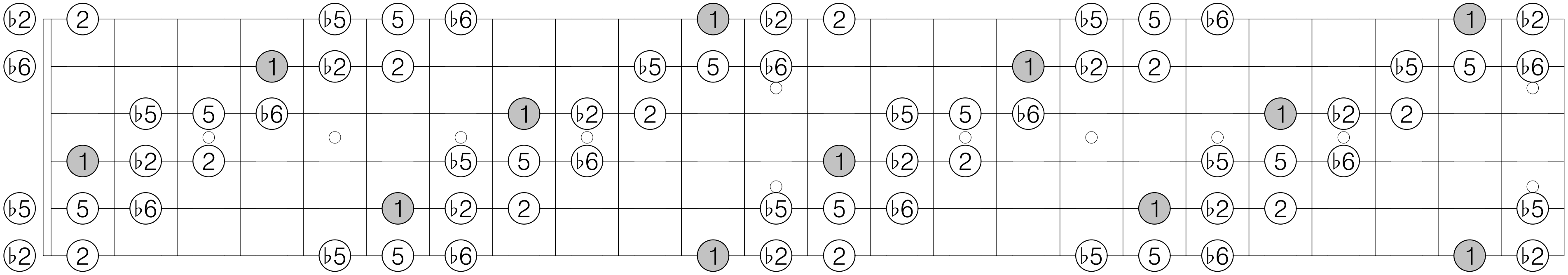

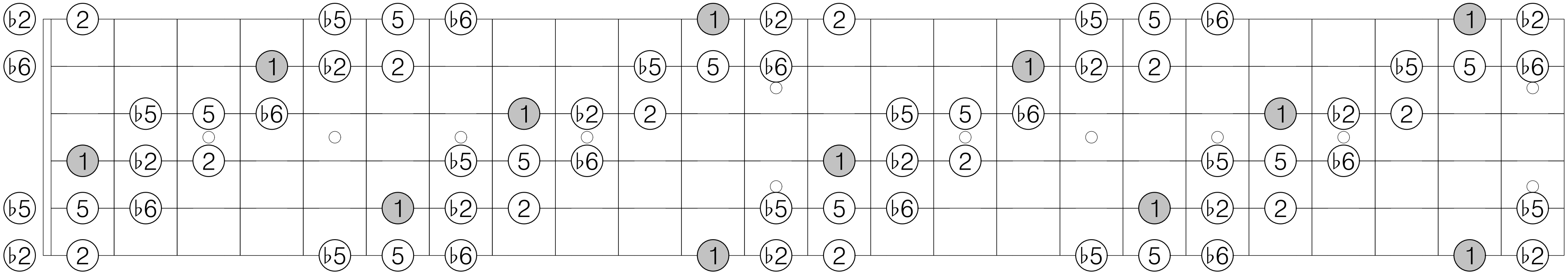

Eb transposition 1 of Mode 6 [1, 1, 2, 2]

1 ♭2 2 3 ♭5 5 ♭6 ♭7 1 ♭2 2 3 ♭5 5 ♭6 ♭7

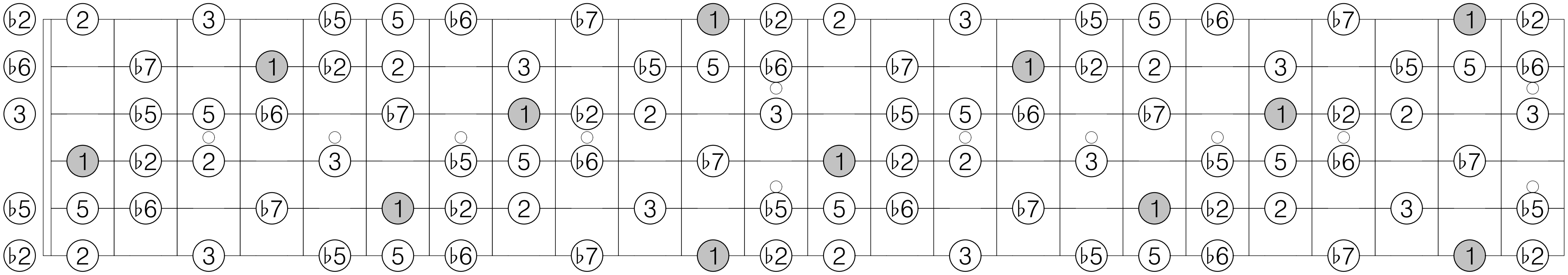

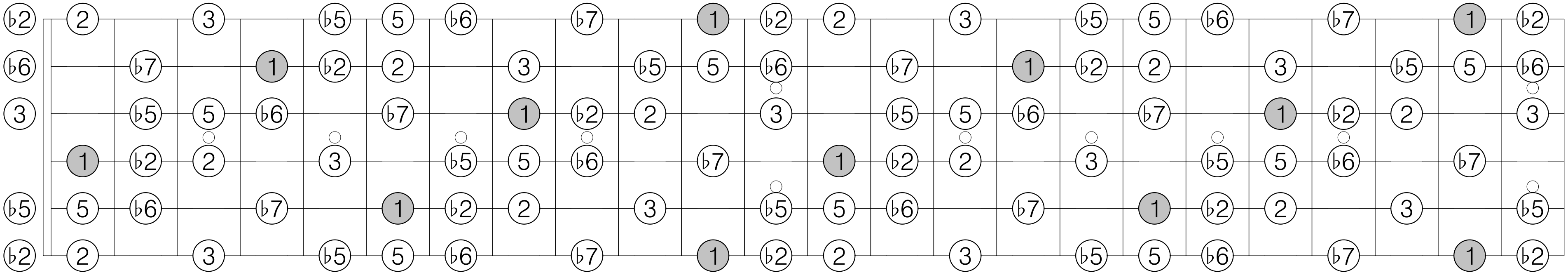

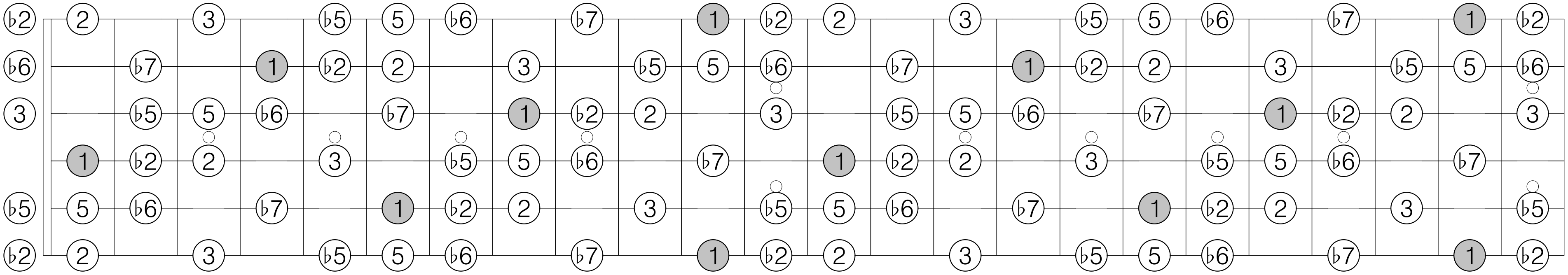

Eb transposition 2 of Mode 6 [1, 1, 2, 2]

1 ♭2 ♭3 4 ♭5 5 6 7 1 ♭2 ♭3 4 ♭5 5 6 7

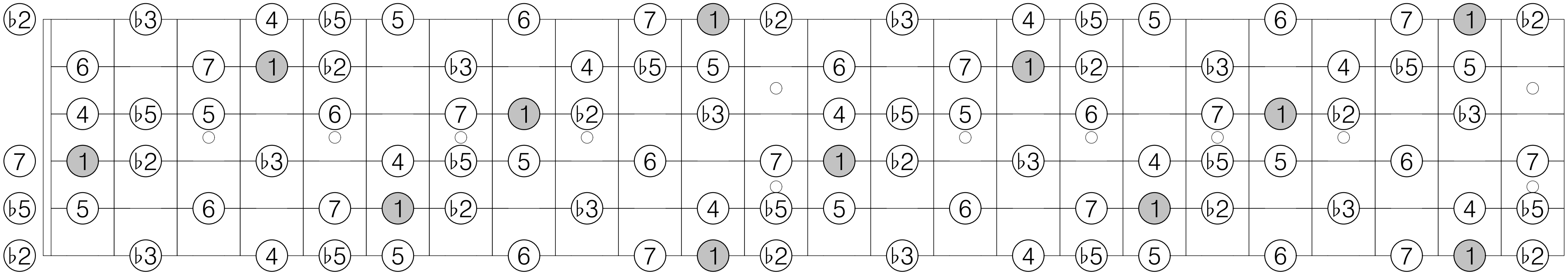

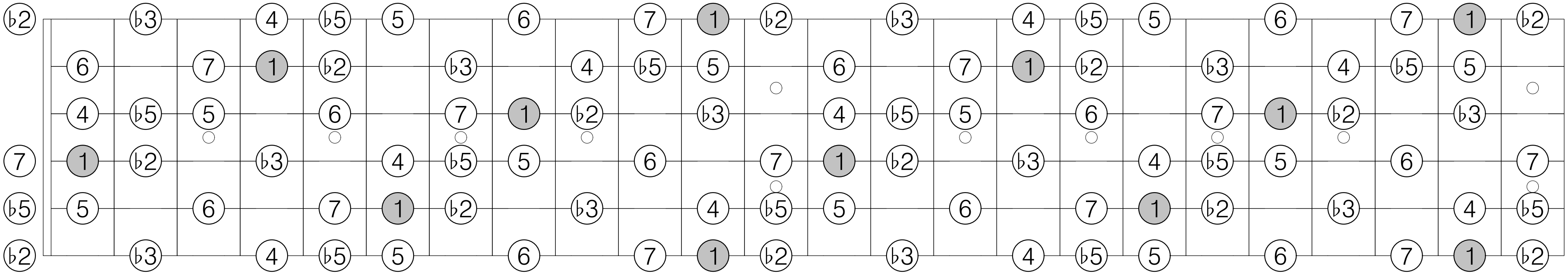

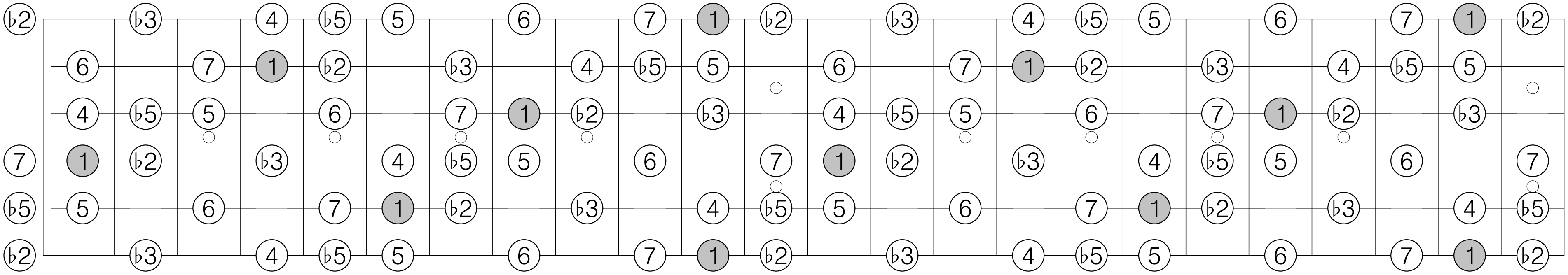

Eb transposition 3 of Mode 6 [1, 1, 2, 2]

1 2 3 4 ♭5 ♭6 ♭7 7 1 2 3 4 ♭5 ♭6 ♭7 7

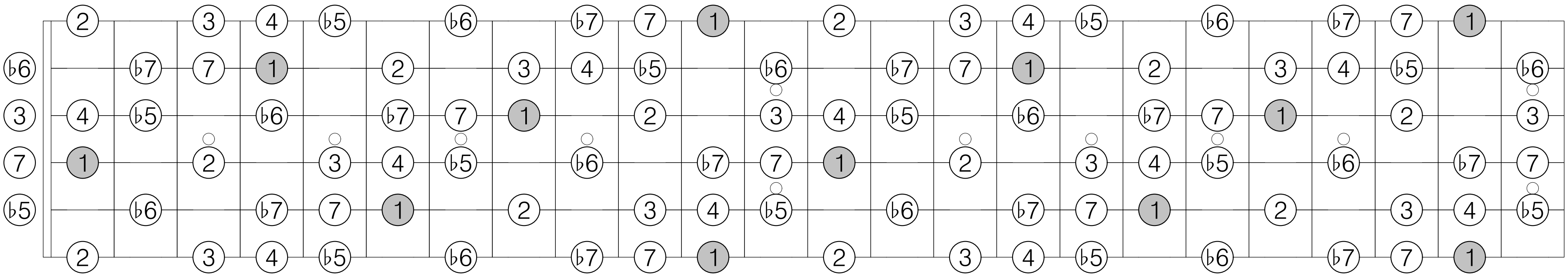

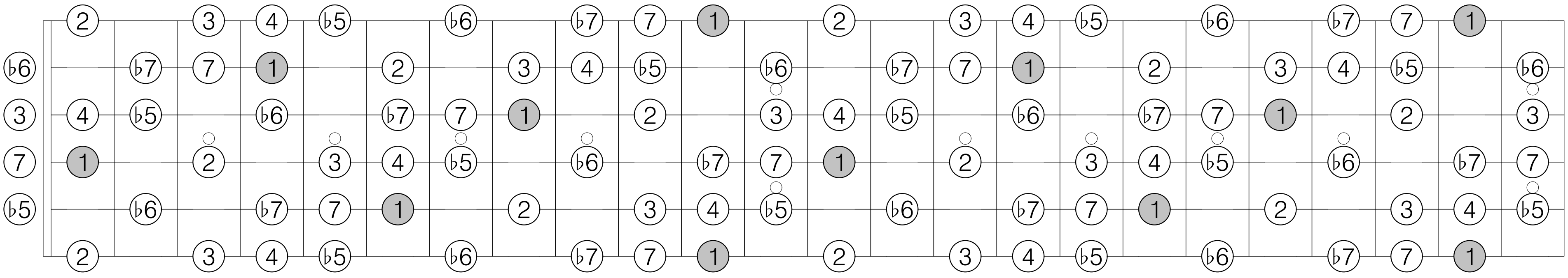

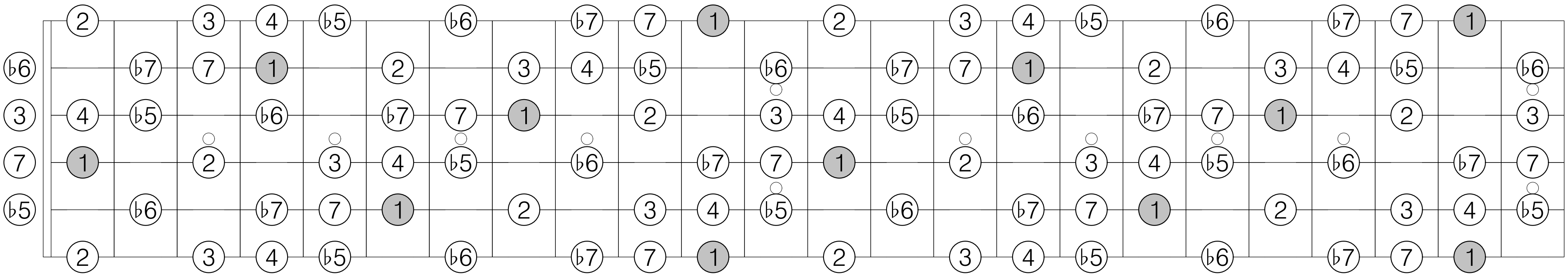

Eb transposition 4 of Mode 6 [1, 1, 2, 2]

1 2 ♭3 3 ♭5 ♭6 6 ♭7 1 2 ♭3 3 ♭5 ♭6 6 ♭7

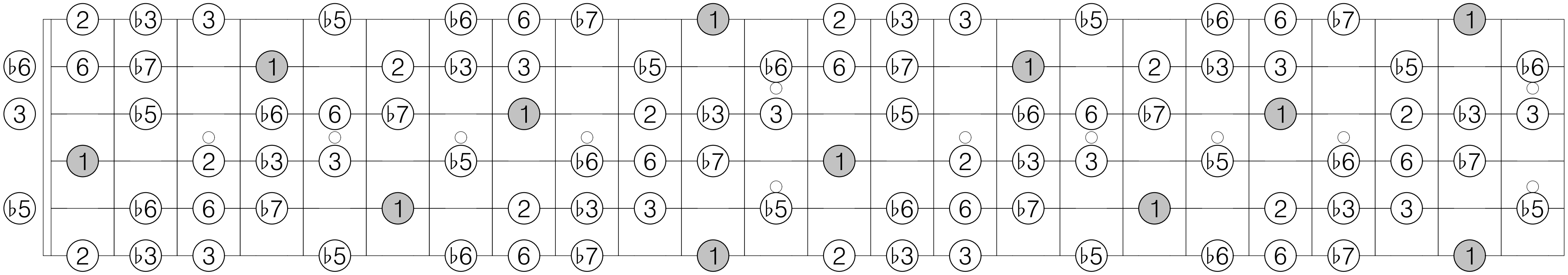

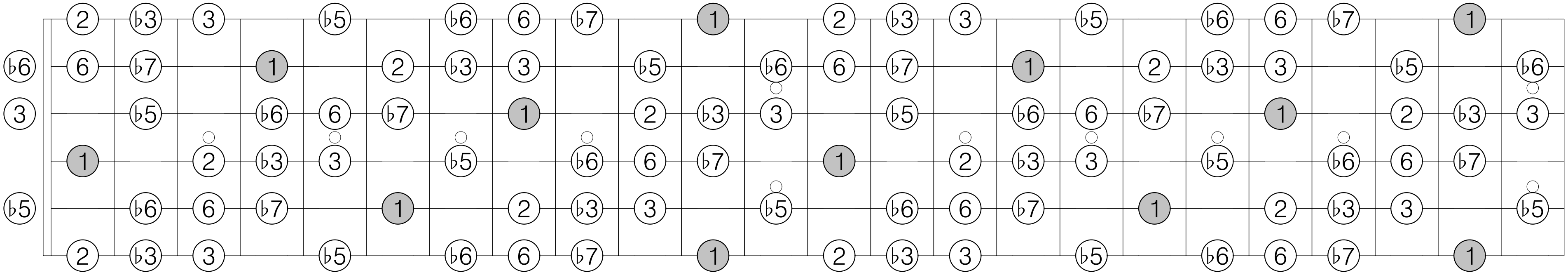

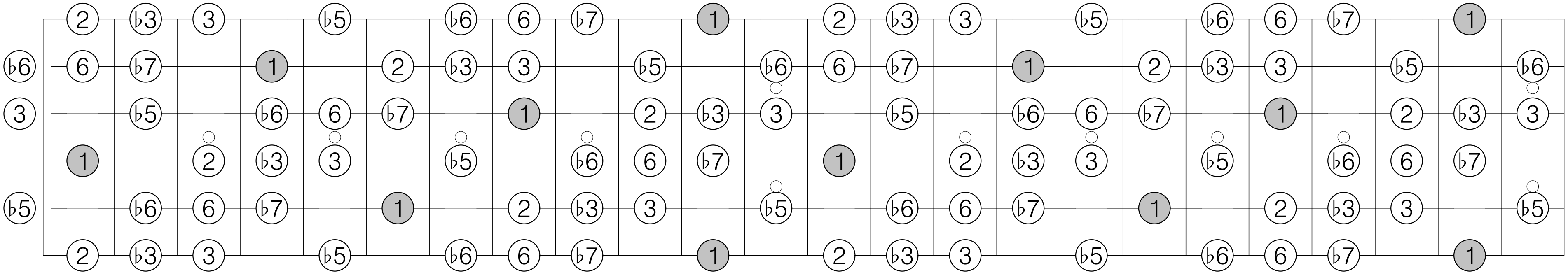

Eb transposition 1 of Mode 7 [1, 1, 1, 2, 1]

1 ♭2 2 ♭3 4 ♭5 5 ♭6 6 7 1 ♭2 2 ♭3 4 ♭5 5 ♭6 6 7

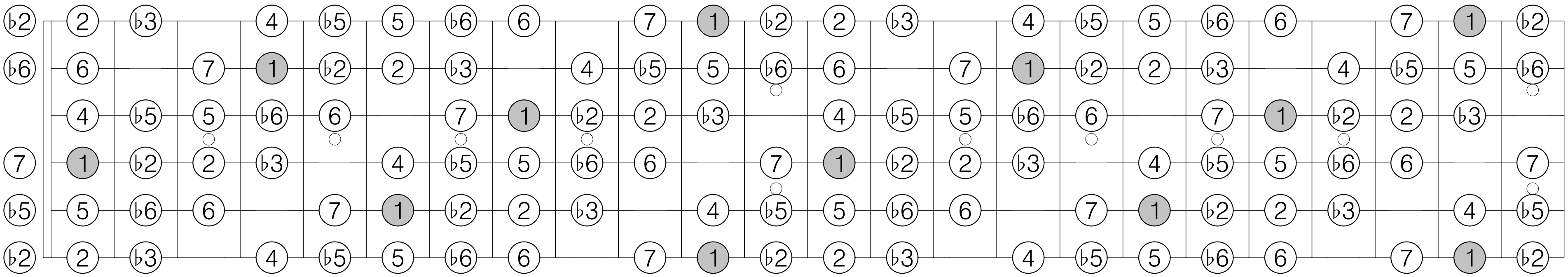

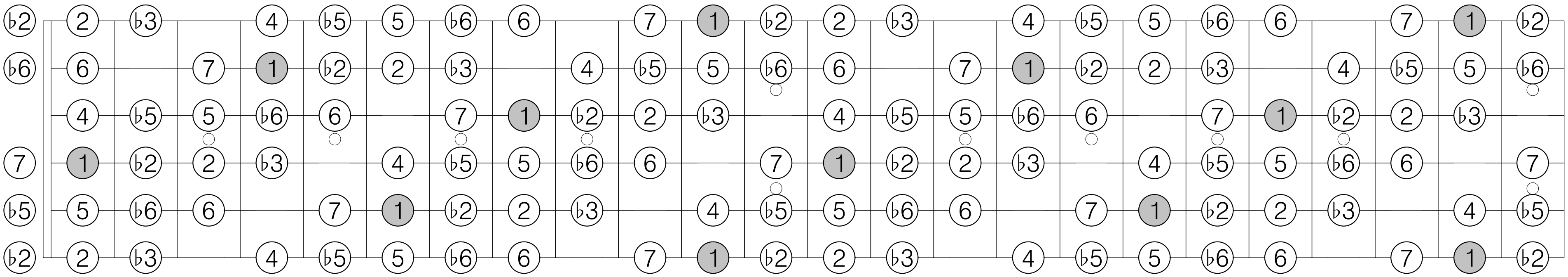

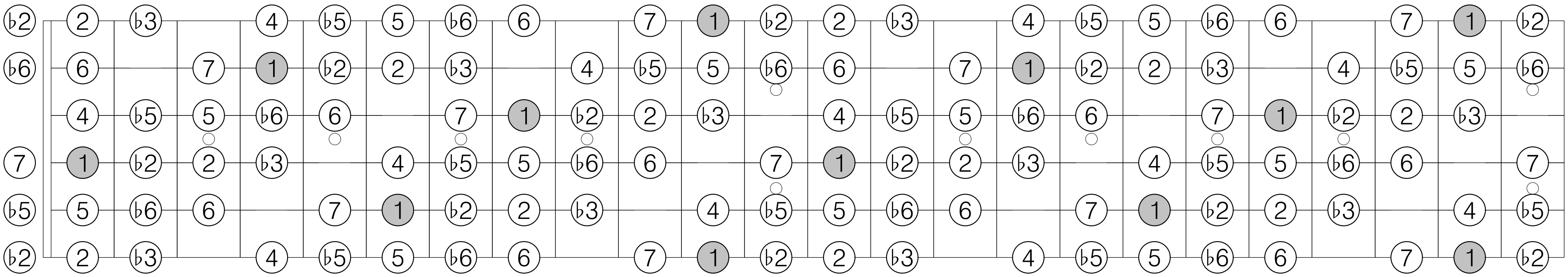

Eb transposition 2 of Mode 7 [1, 1, 1, 2, 1]

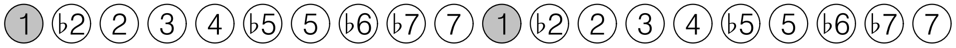

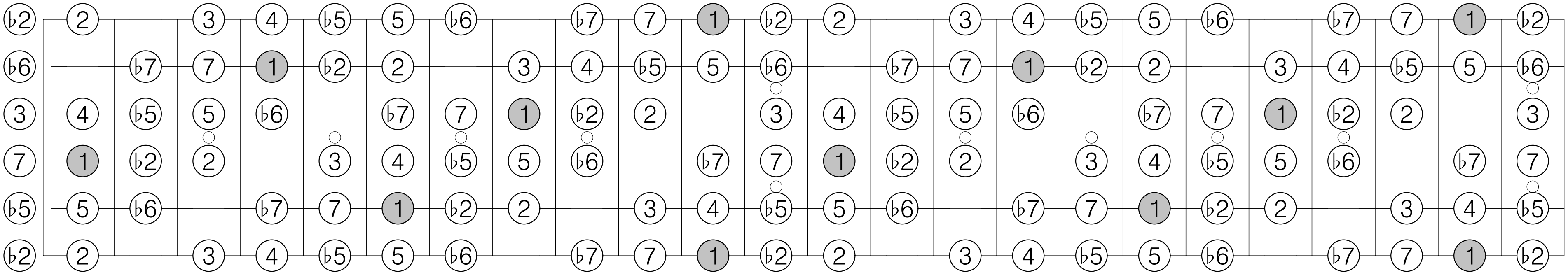

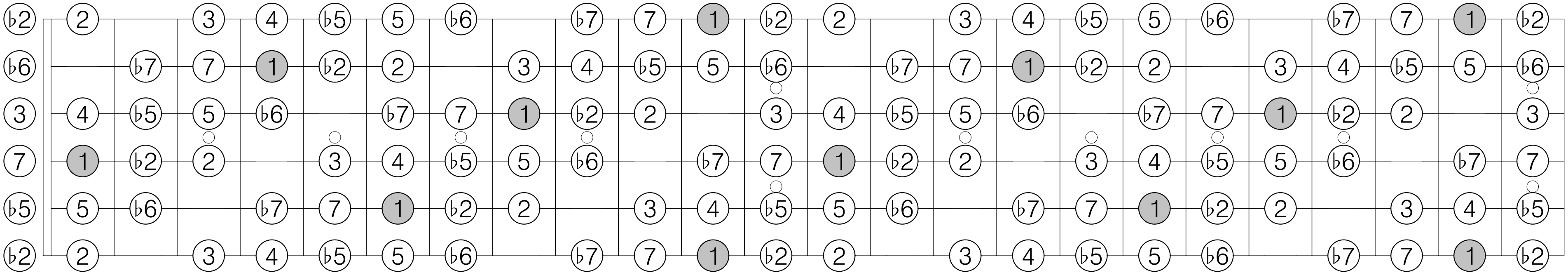

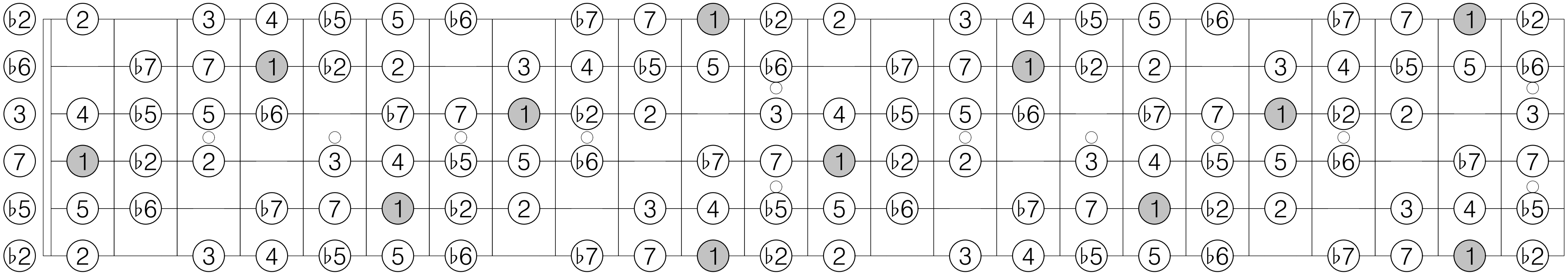

Eb transposition 3 of Mode 7 [1, 1, 1, 2, 1]

1 ♭2 ♭3 3 4 ♭5 5 6 ♭7 7 1 ♭2 ♭3 3 4 ♭5 5 6 ♭7 7

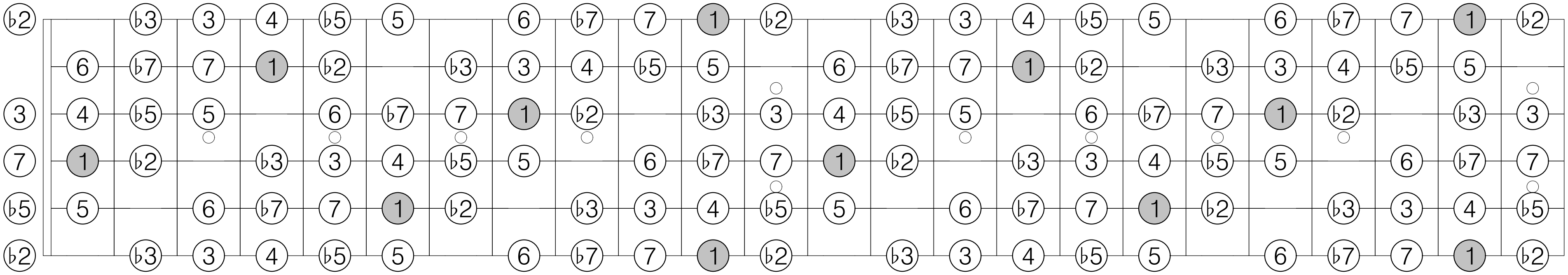

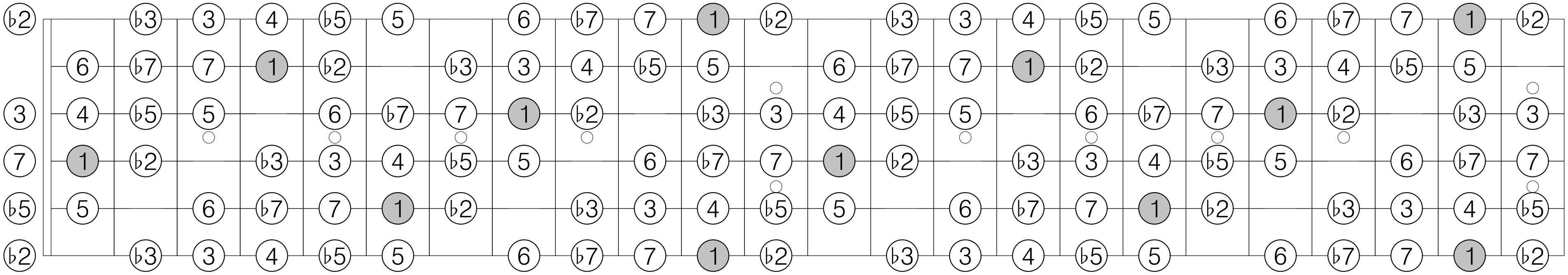

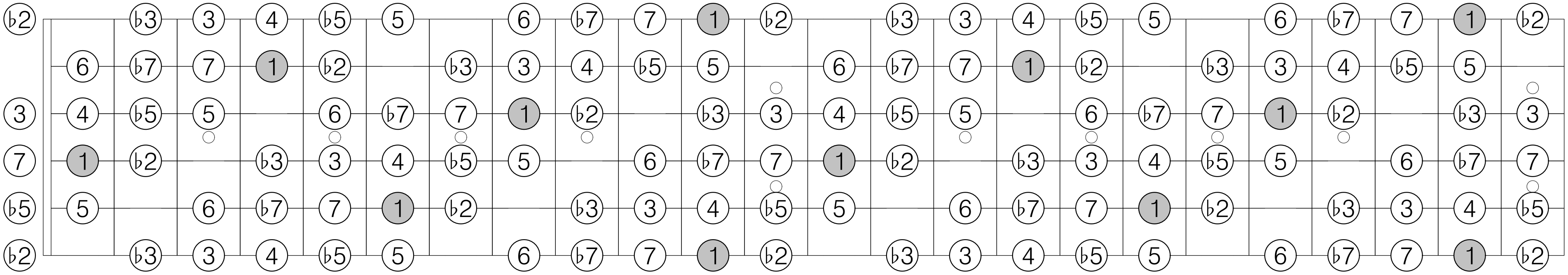

Eb transposition 4 of Mode 7 [1, 1, 1, 2, 1]

1 2 ♭3 3 4 ♭5 ♭6 6 ♭7 7 1 2 ♭3 3 4 ♭5 ♭6 6 ♭7 7

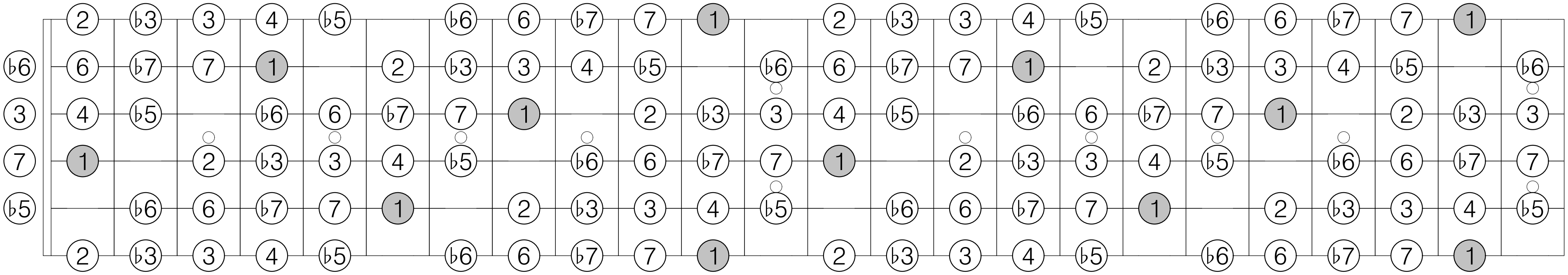

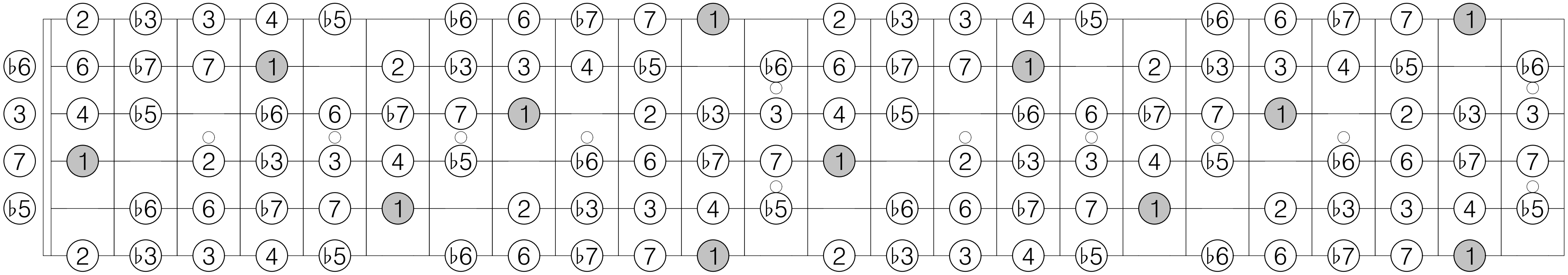

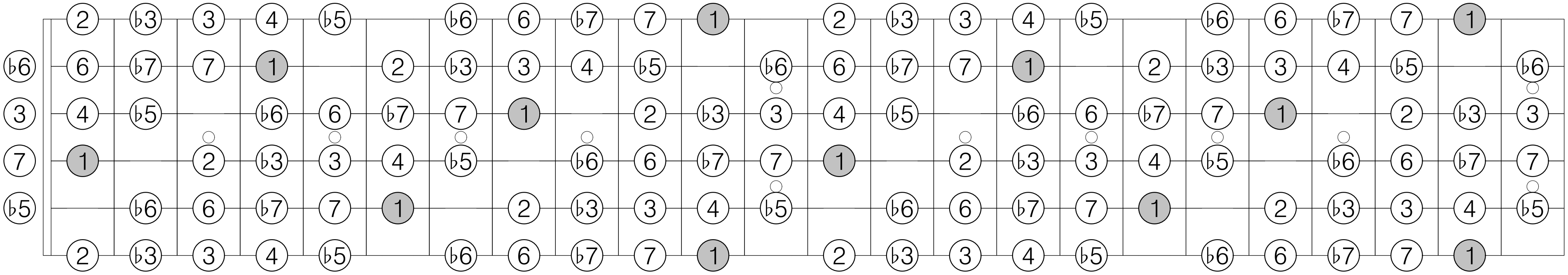

Eb transposition 5 of Mode 7 [1, 1, 1, 2, 1]

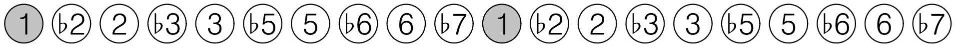

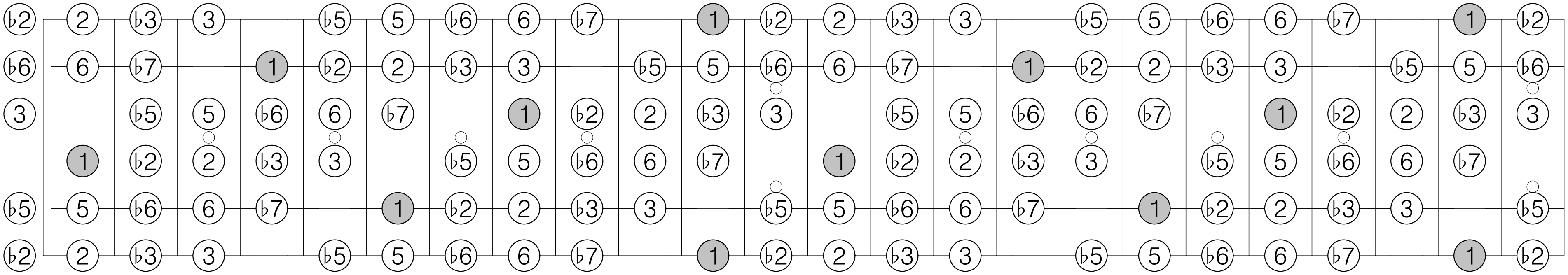

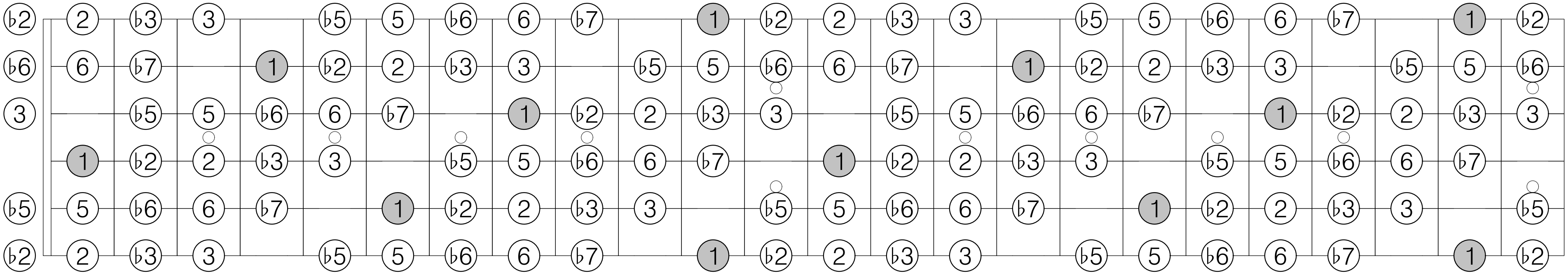

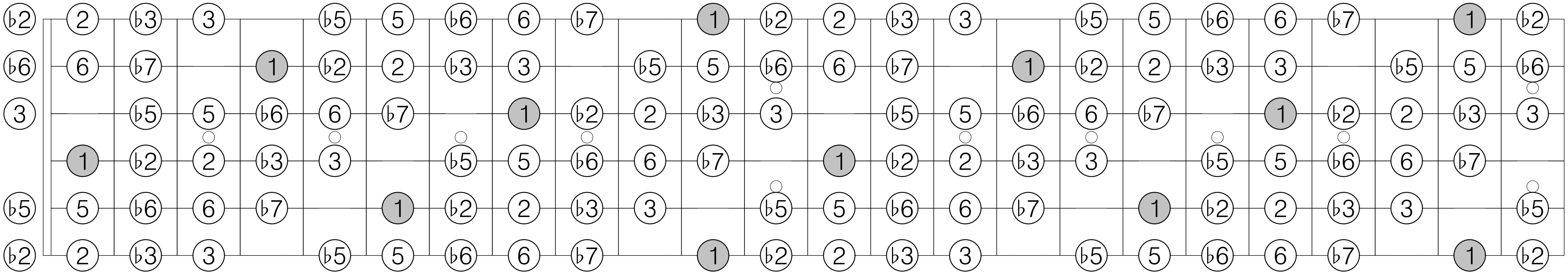

E transposition 1 of Mode 1 [2]

1 2 3 ♭5 ♭6 ♭7 1 2 3 ♭5 ♭6 ♭7

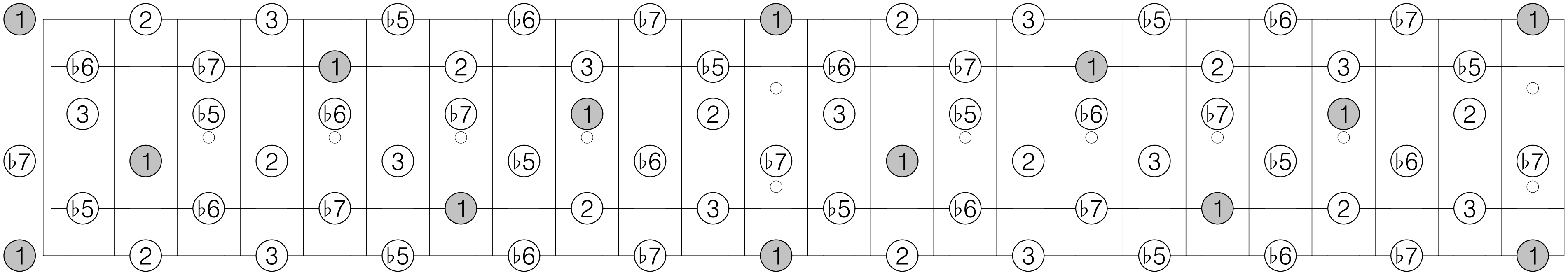

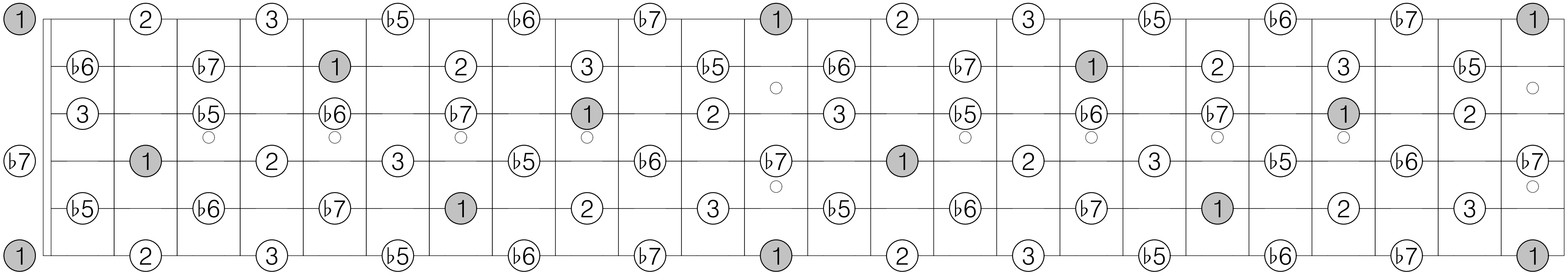

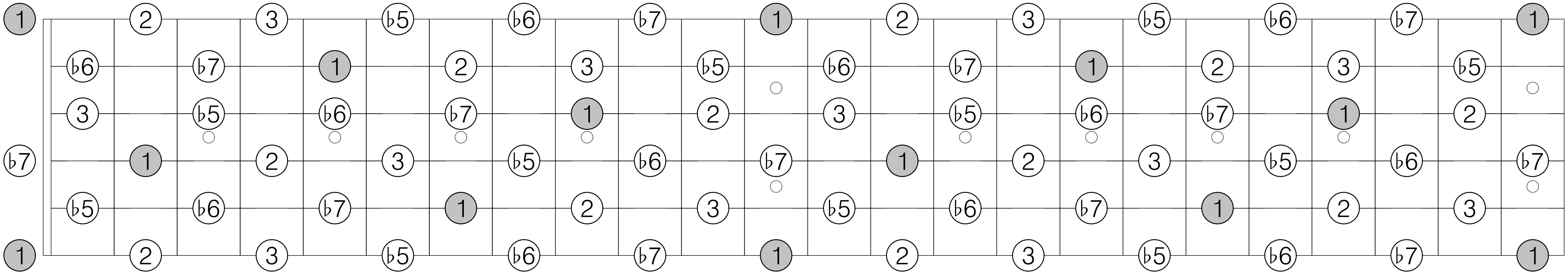

E transposition 1 of Mode 2 [1, 2]

1 ♭2 ♭3 3 ♭5 5 6 ♭7 1 ♭2 ♭3 3 ♭5 5 6 ♭7

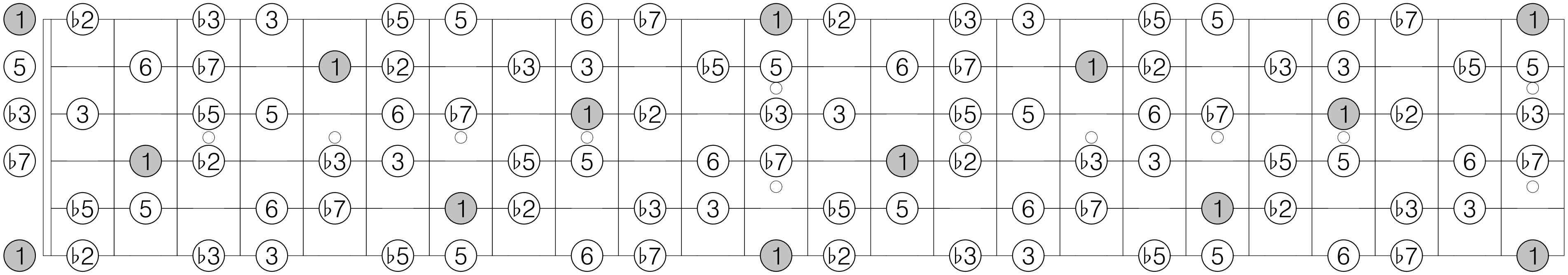

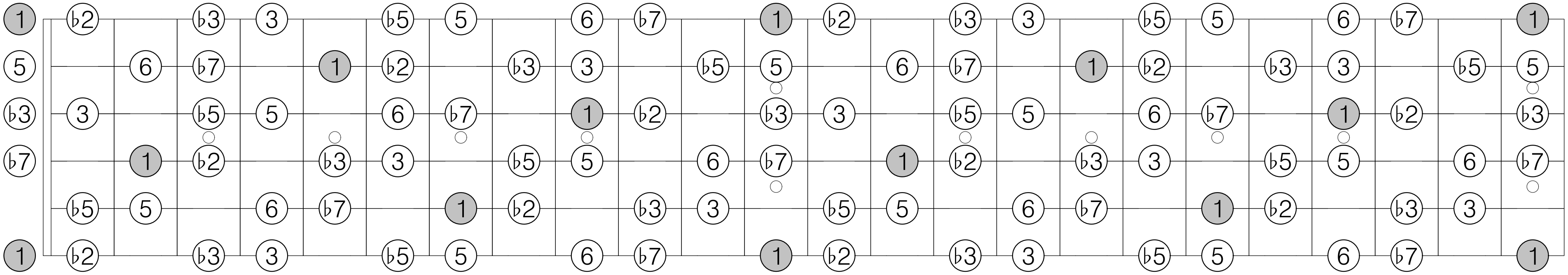

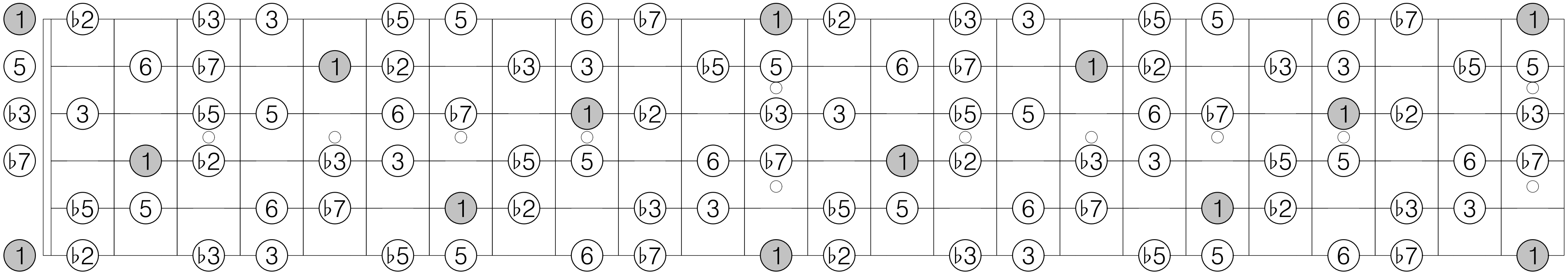

E transposition 2 of Mode 2 [1, 2]

1 2 ♭3 4 ♭5 ♭6 6 7 1 2 ♭3 4 ♭5 ♭6 6 7

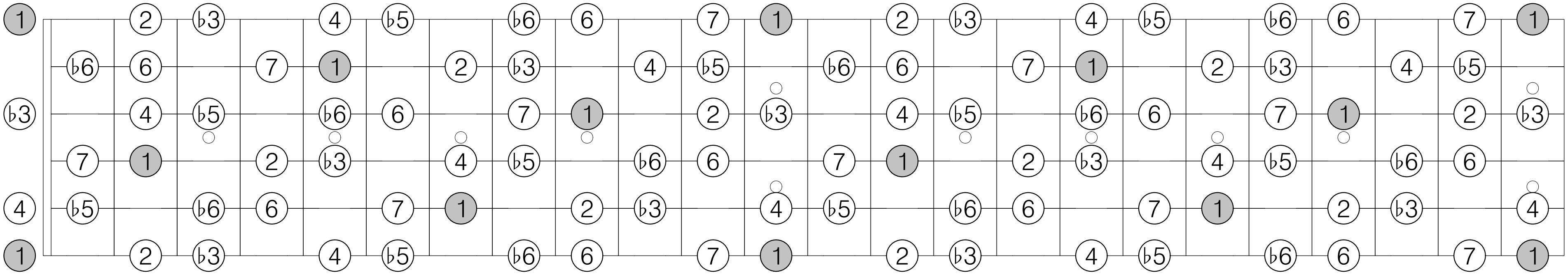

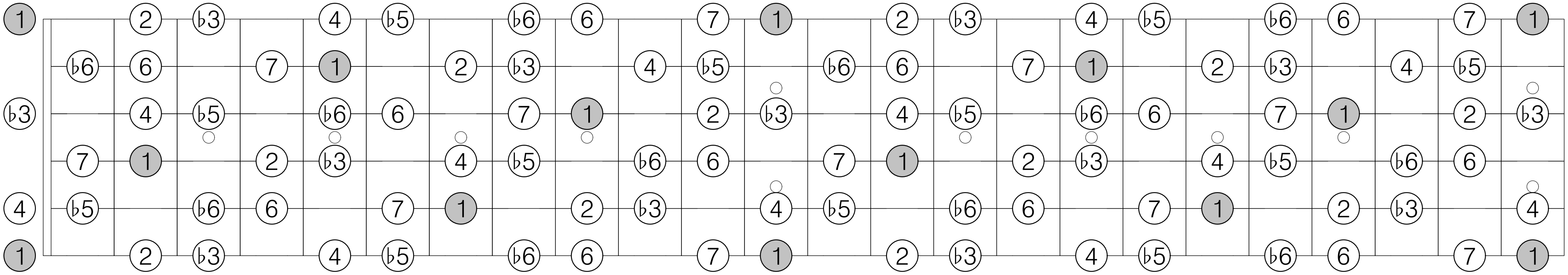

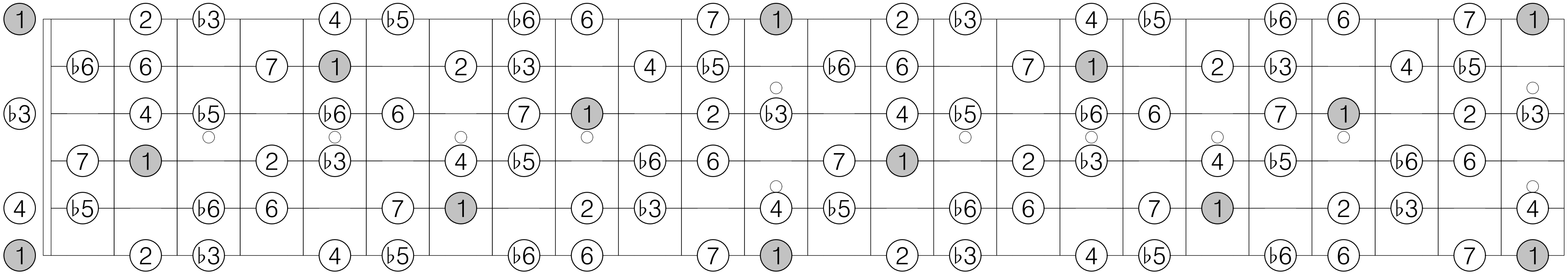

E transposition 1 of Mode 3 [1, 1, 2]

1 ♭2 2 3 4 ♭5 ♭6 6 ♭7 1 ♭2 2 3 4 ♭5 ♭6 6 ♭7

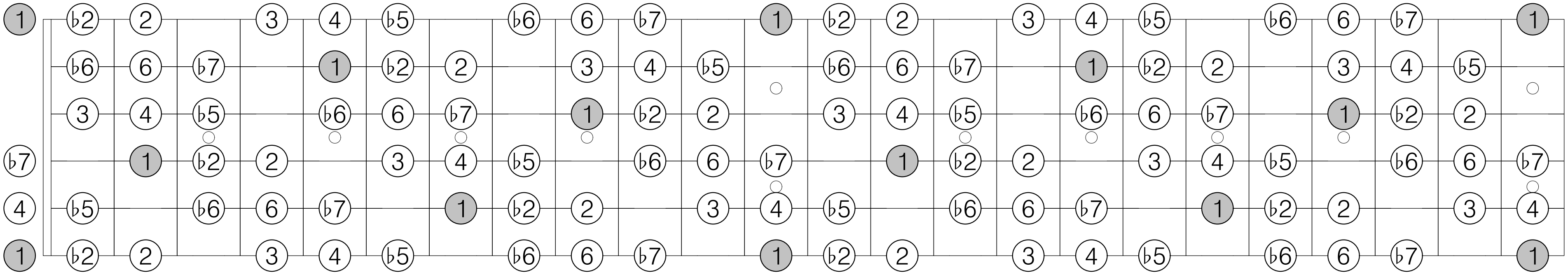

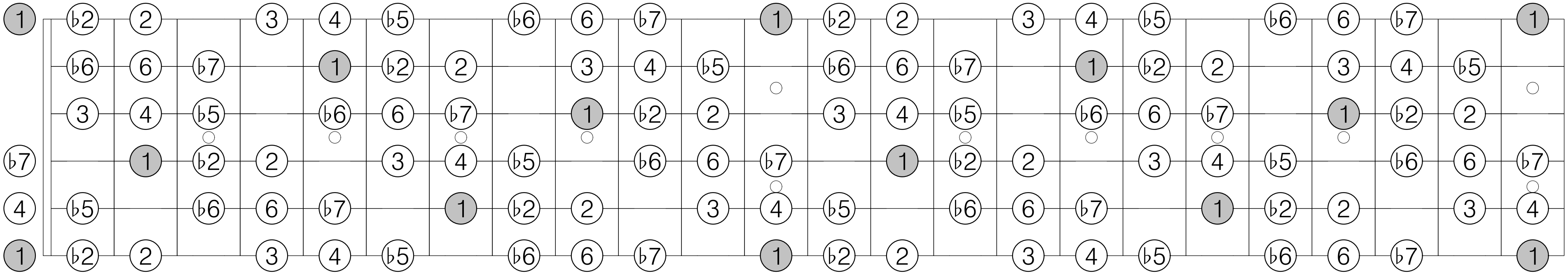

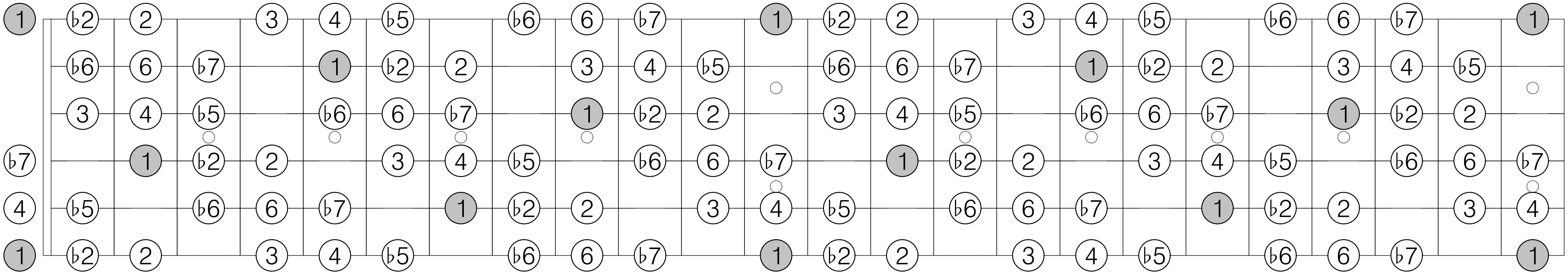

E transposition 2 of Mode 3 [1, 1, 2]

1 ♭2 ♭3 3 4 5 ♭6 6 7 1 ♭2 ♭3 3 4 5 ♭6 6 7

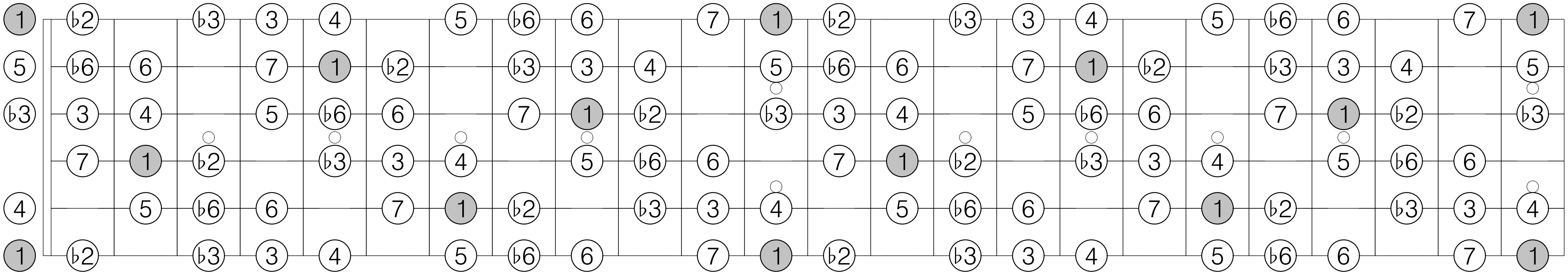

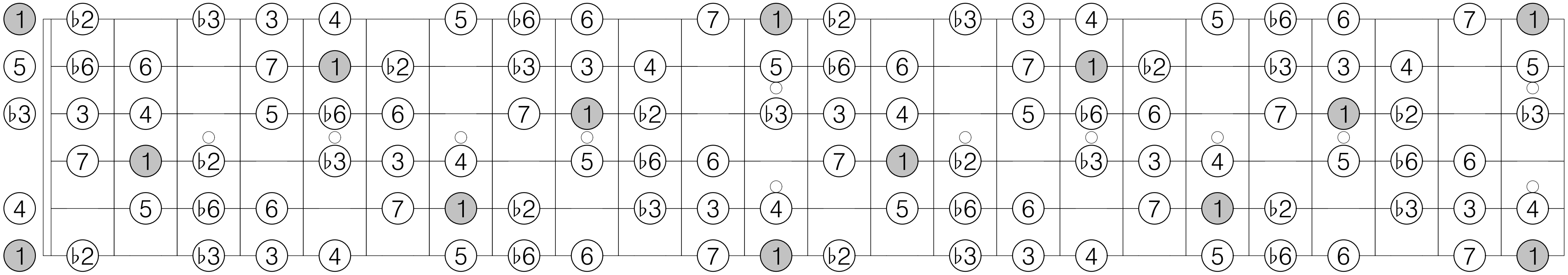

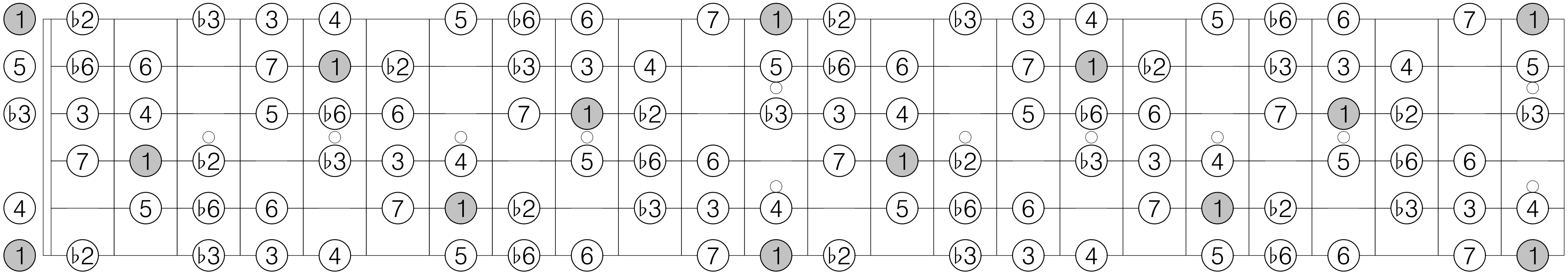

E transposition 3 of Mode 3 [1, 1, 2]

1 2 ♭3 3 ♭5 5 ♭6 ♭7 7 1 2 ♭3 3 ♭5 5 ♭6 ♭7 7

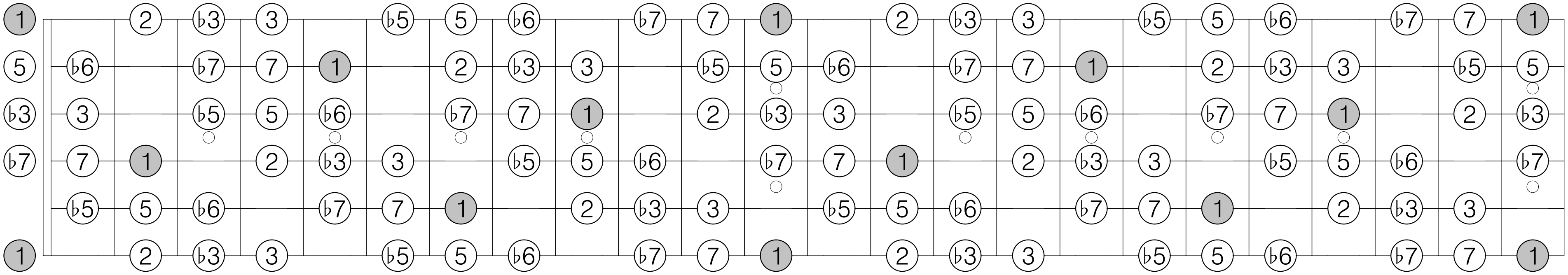

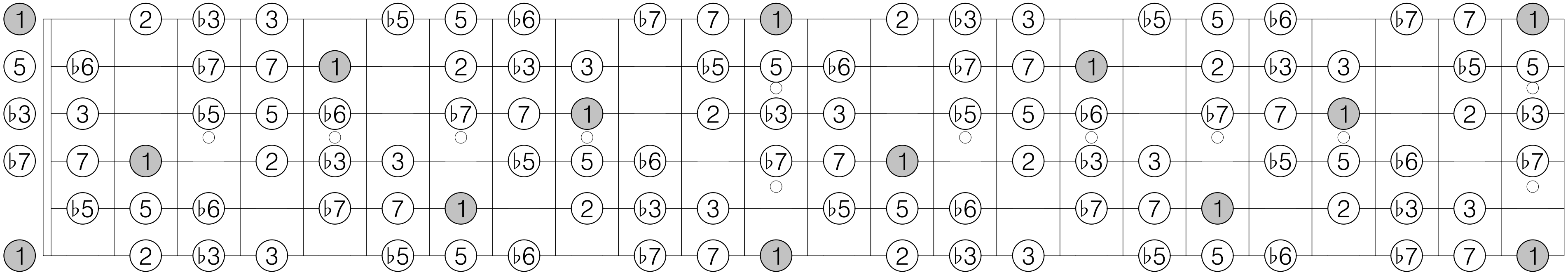

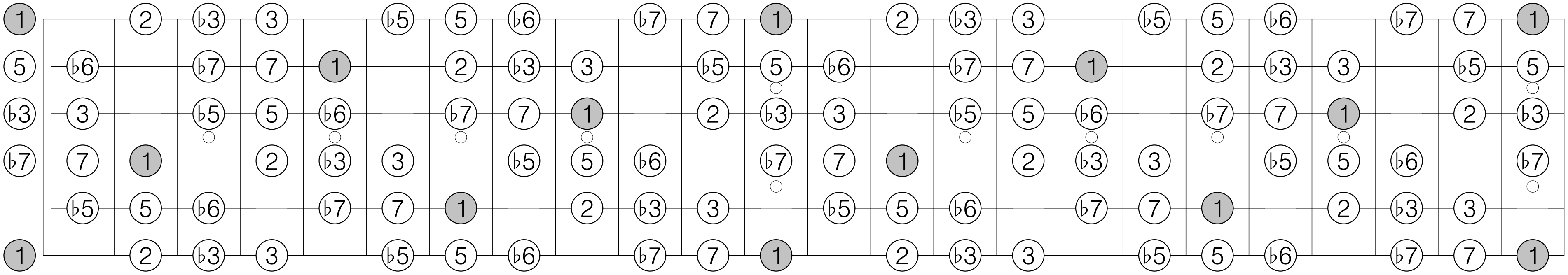

E transposition 1 of Mode 4 [1, 1, 3, 1]

1 ♭2 2 4 ♭5 5 ♭6 7 1 ♭2 2 4 ♭5 5 ♭6 7

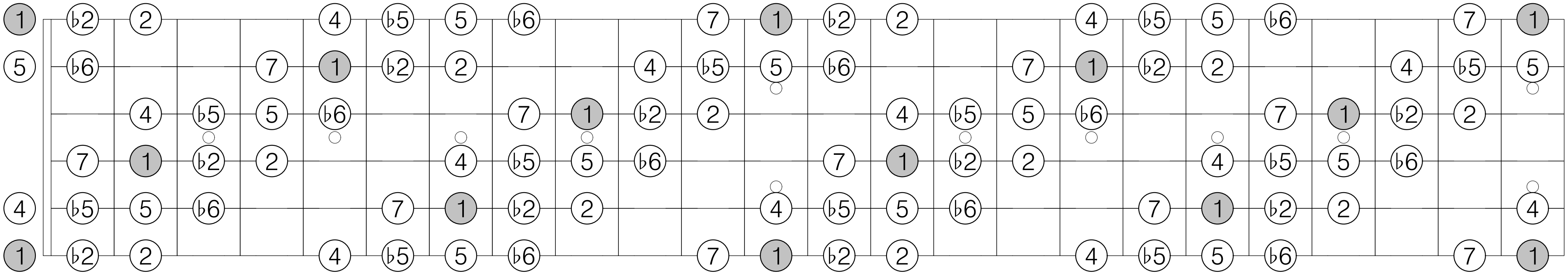

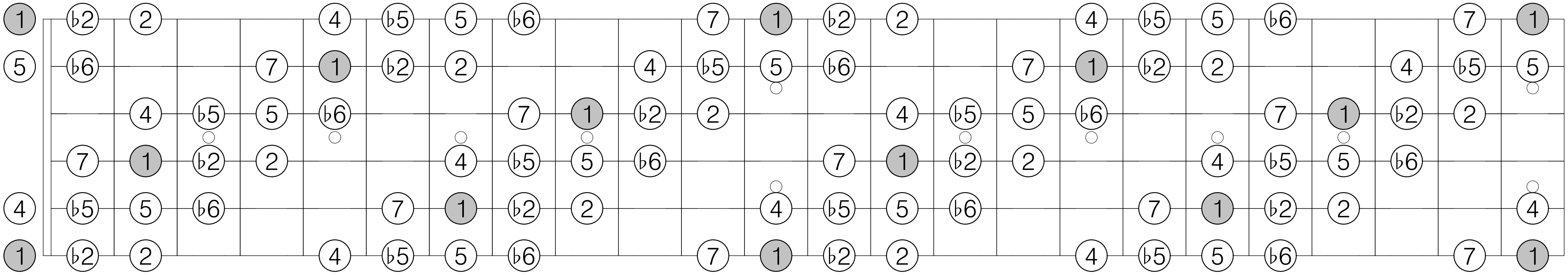

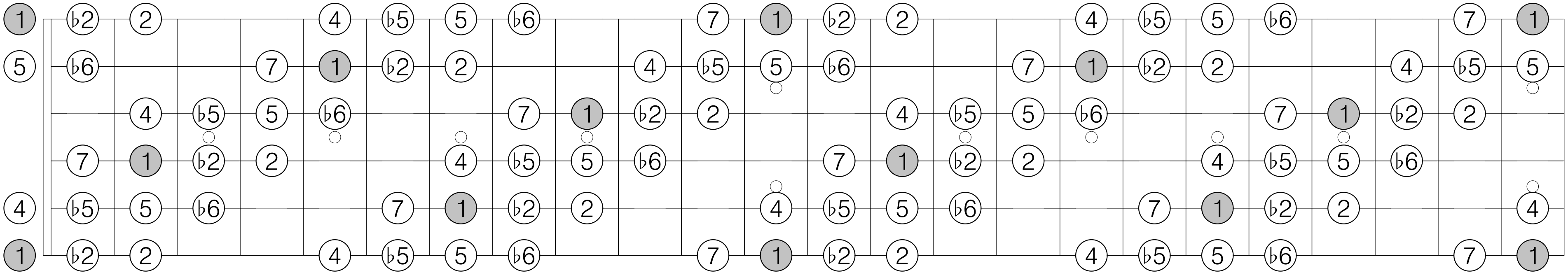

E transposition 2 of Mode 4 [1, 1, 3, 1]

1 ♭2 3 4 ♭5 5 ♭7 7 1 ♭2 3 4 ♭5 5 ♭7 7

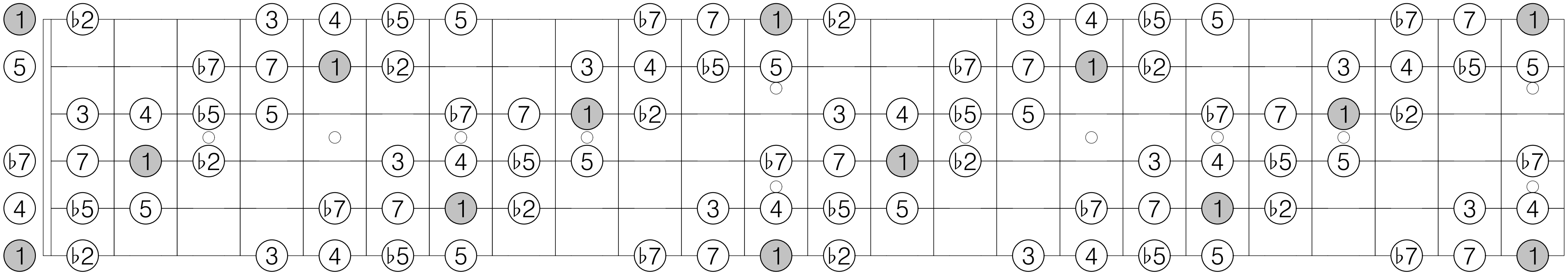

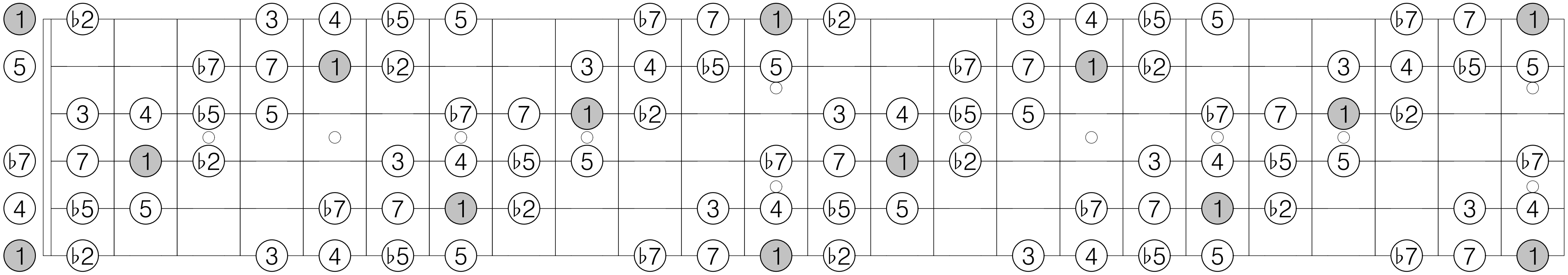

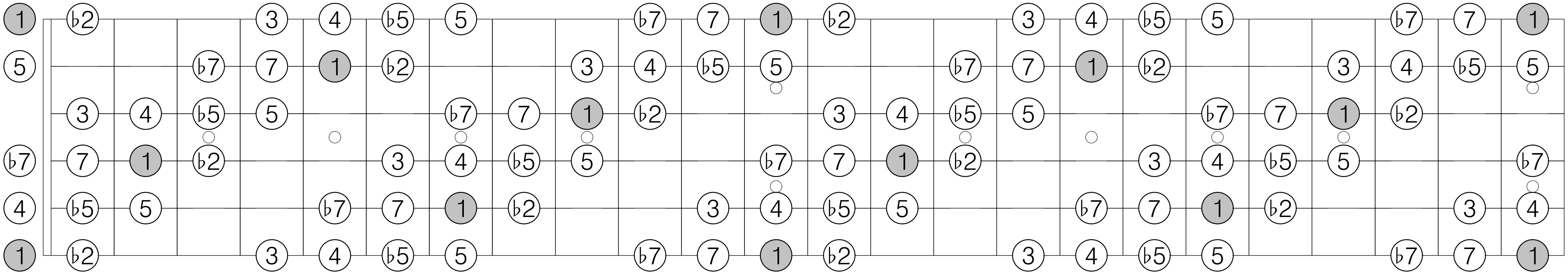

E transposition 3 of Mode 4 [1, 1, 3, 1]

1 ♭3 3 4 ♭5 6 ♭7 7 1 ♭3 3 4 ♭5 6 ♭7 7

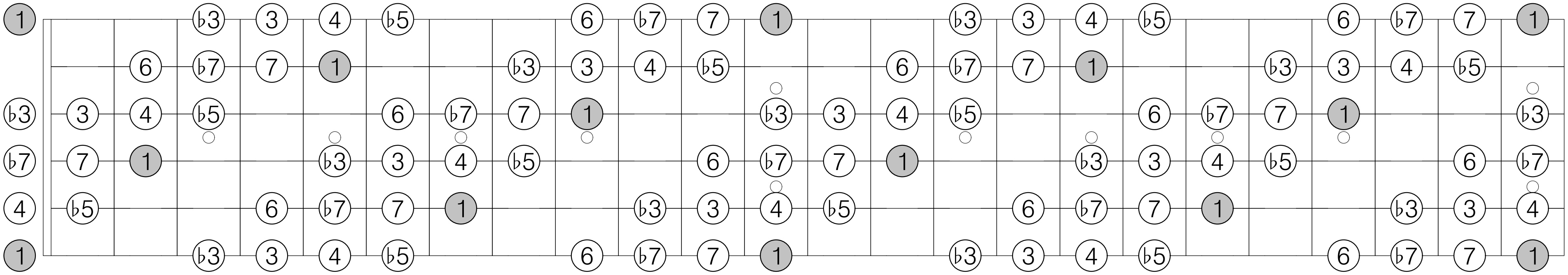

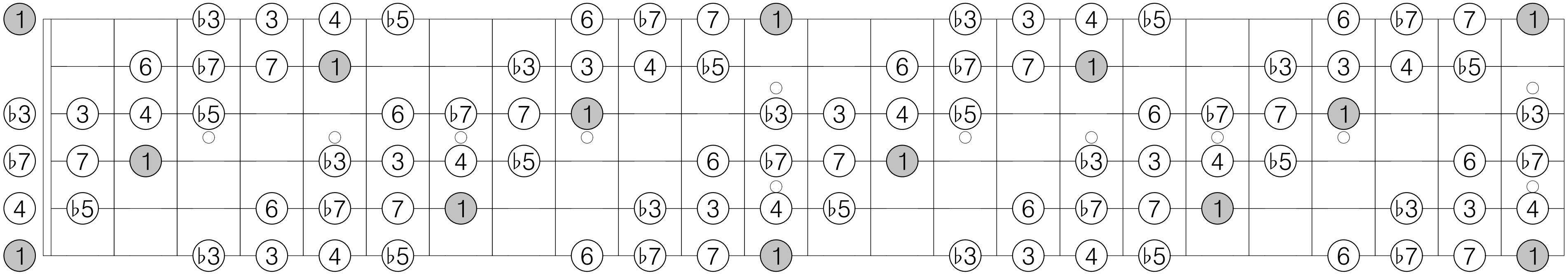

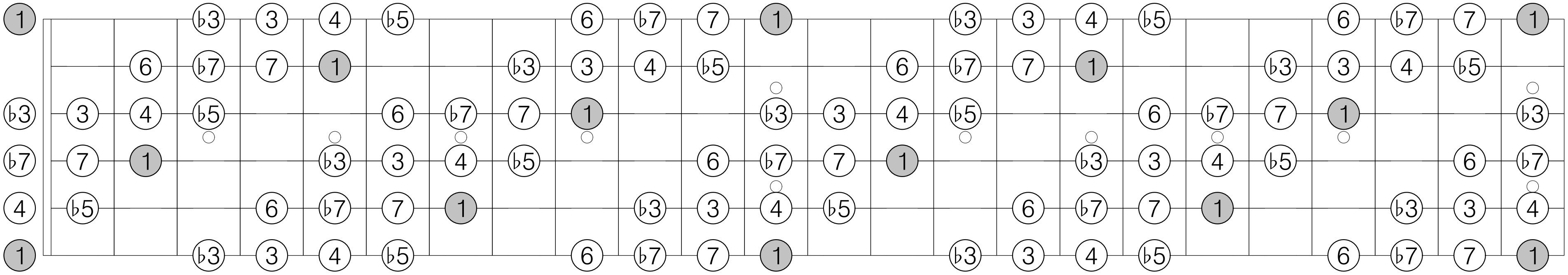

E transposition 4 of Mode 4 [1, 1, 3, 1]

1 ♭2 2 ♭3 ♭5 5 ♭6 6 1 ♭2 2 ♭3 ♭5 5 ♭6 6

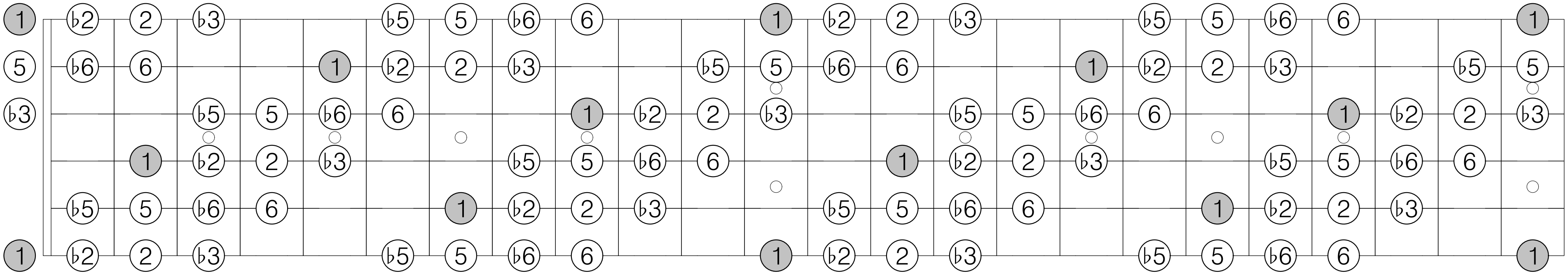

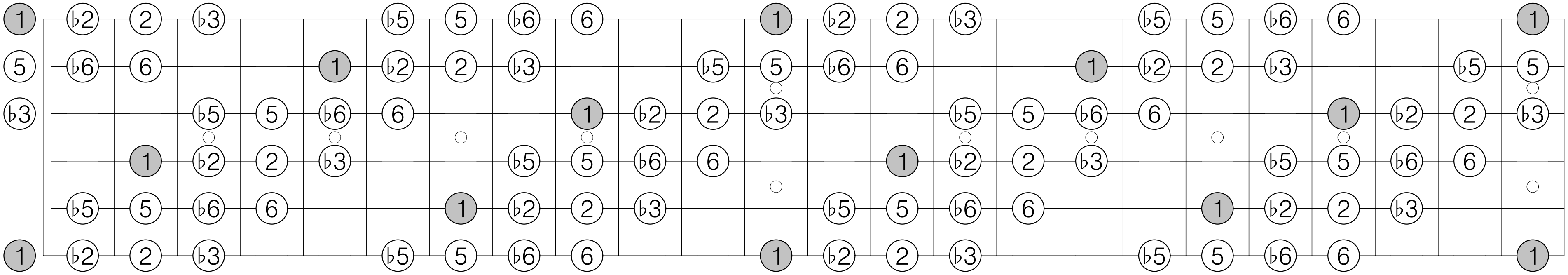

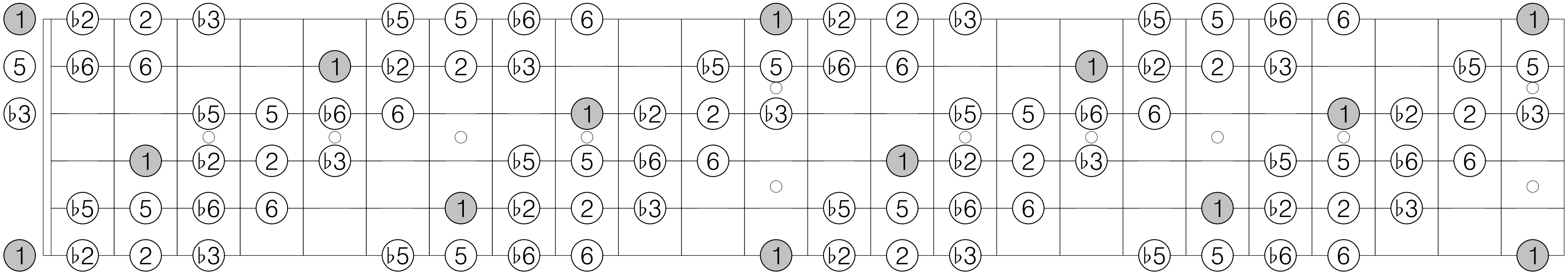

E transposition 1 of Mode 5 [1, 4, 1]

1 ♭2 4 ♭5 5 7 1 ♭2 4 ♭5 5 7

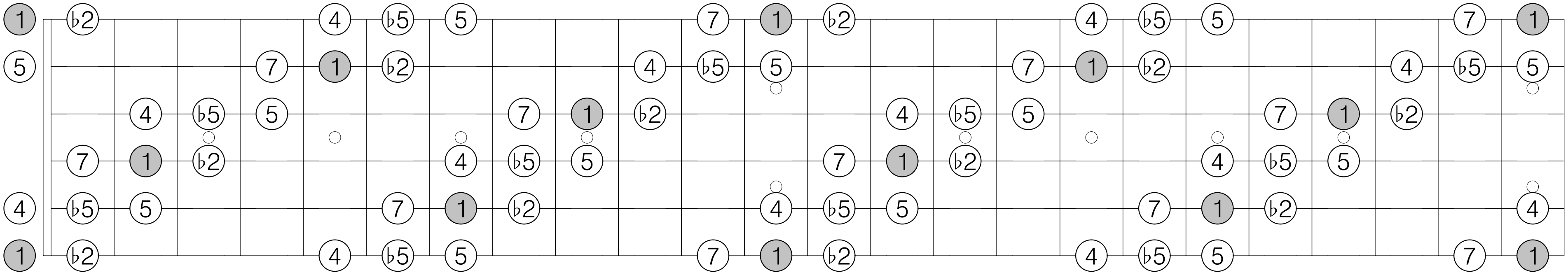

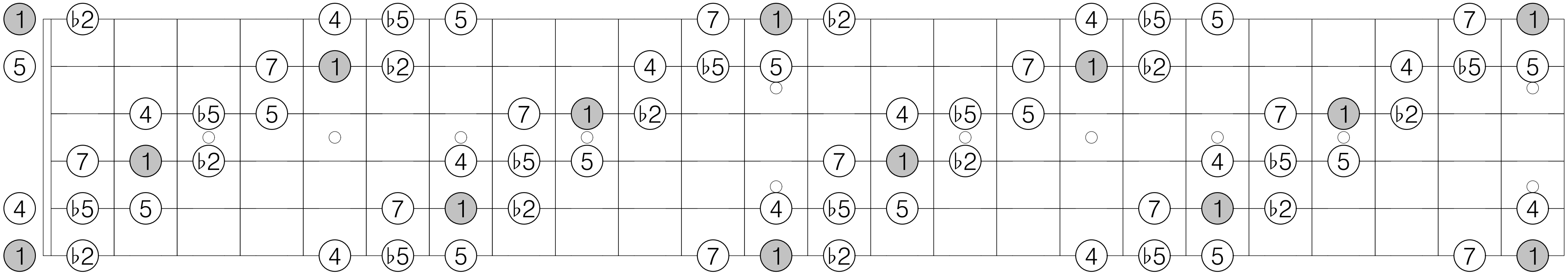

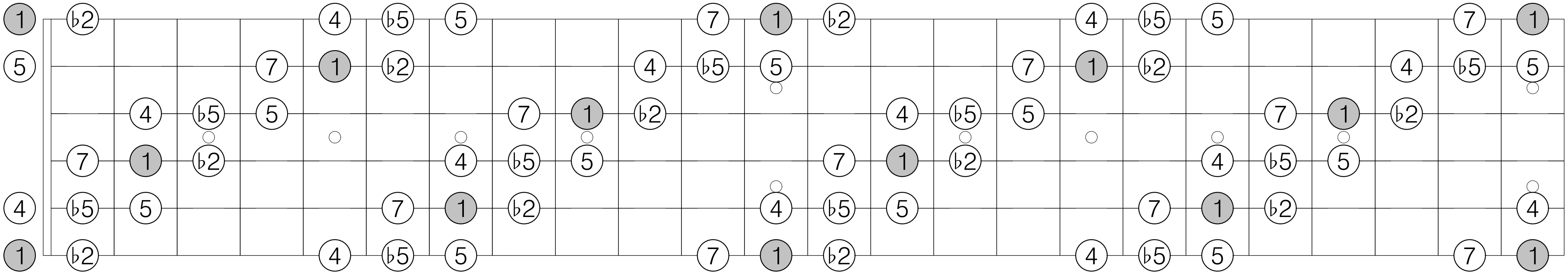

E transposition 2 of Mode 5 [1, 4, 1]

1 3 4 ♭5 ♭7 7 1 3 4 ♭5 ♭7 7

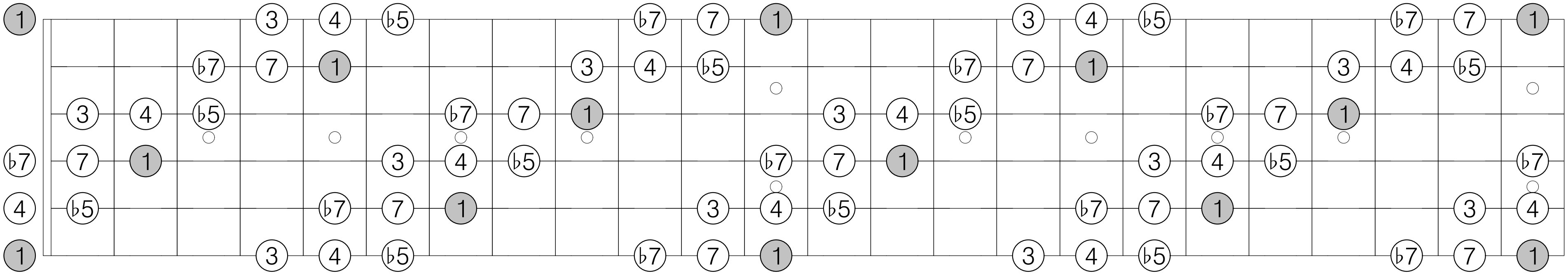

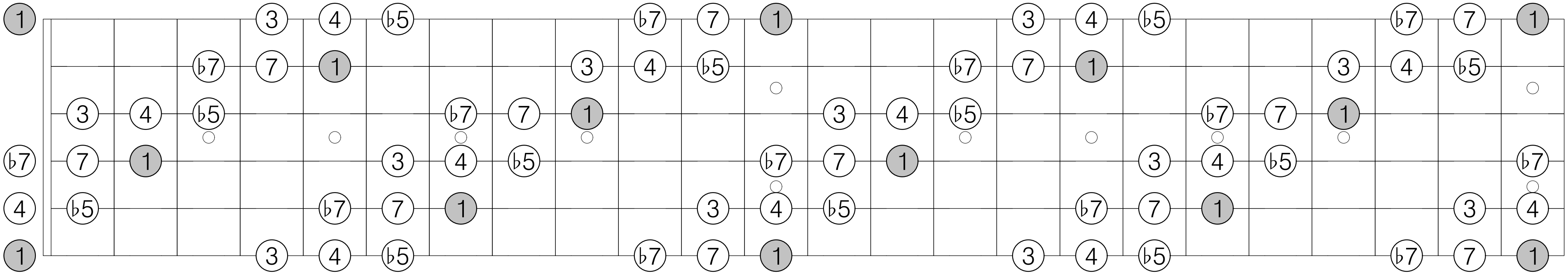

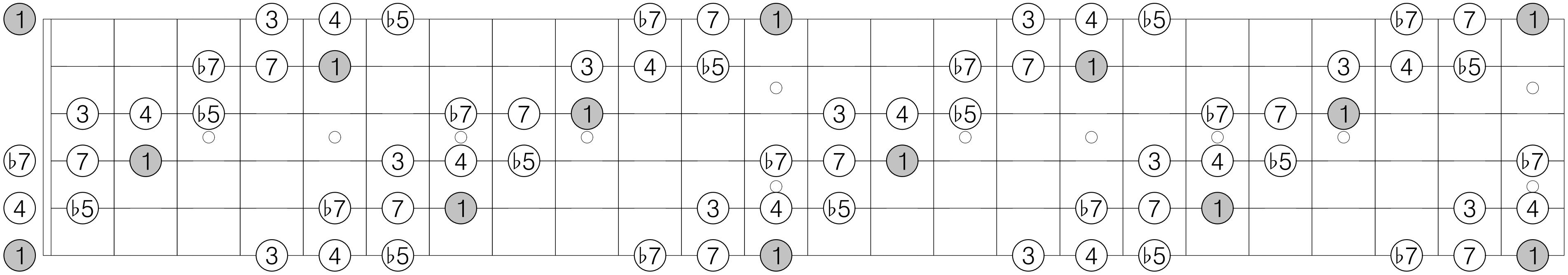

E transposition 3 of Mode 5 [1, 4, 1]

1 ♭2 2 ♭5 5 ♭6 1 ♭2 2 ♭5 5 ♭6

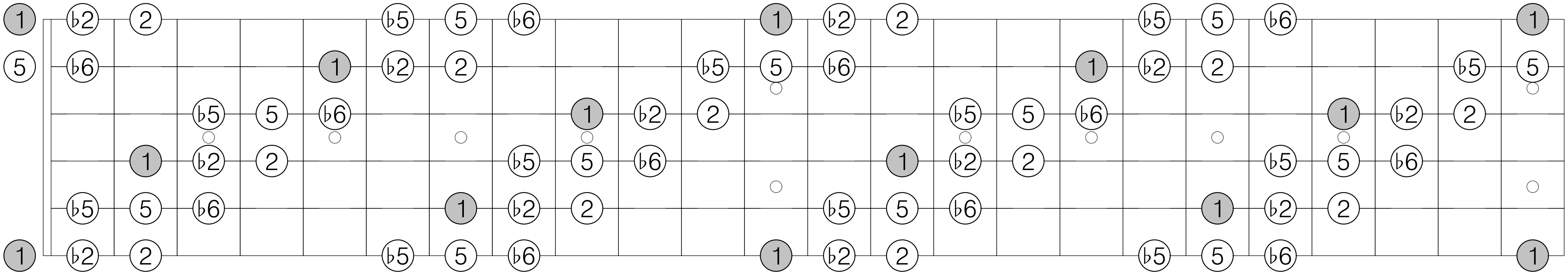

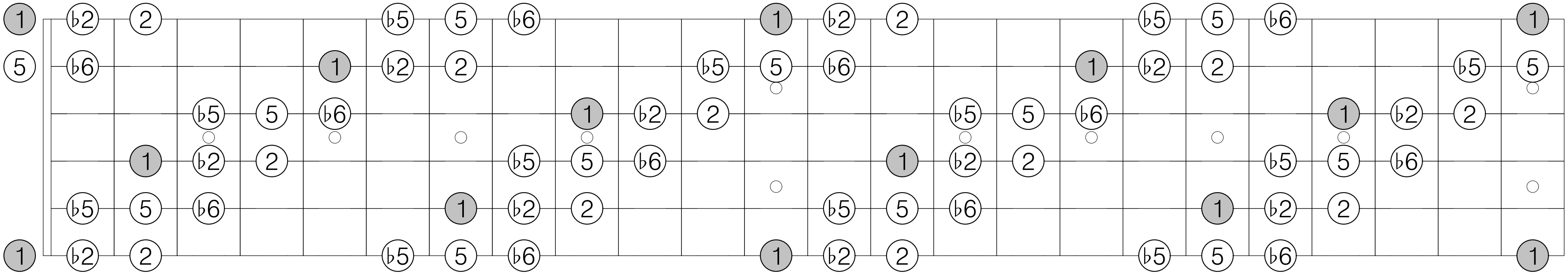

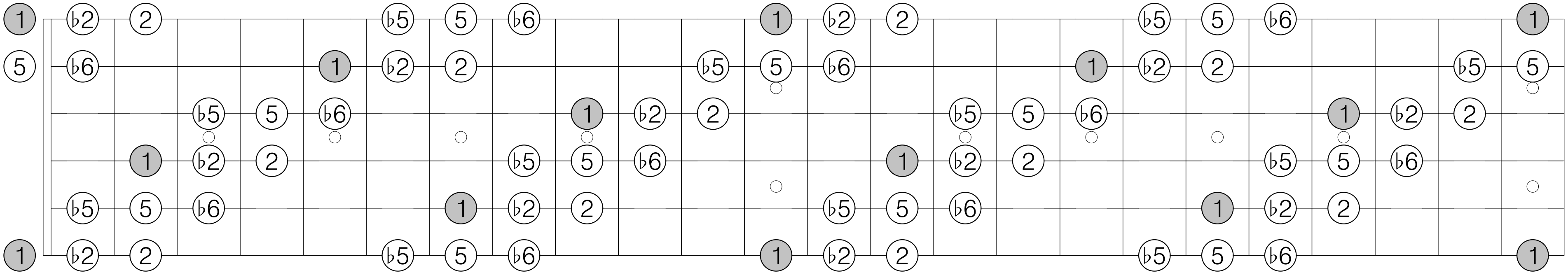

E transposition 1 of Mode 6 [1, 1, 2, 2]

1 ♭2 2 3 ♭5 5 ♭6 ♭7 1 ♭2 2 3 ♭5 5 ♭6 ♭7

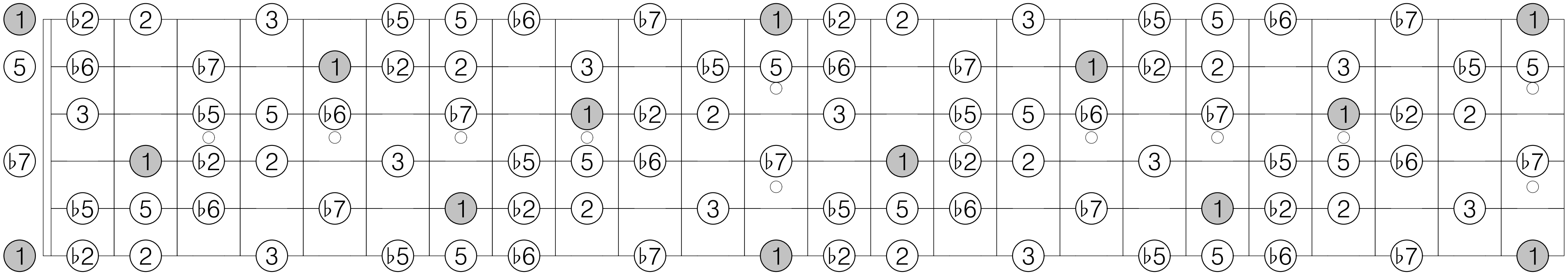

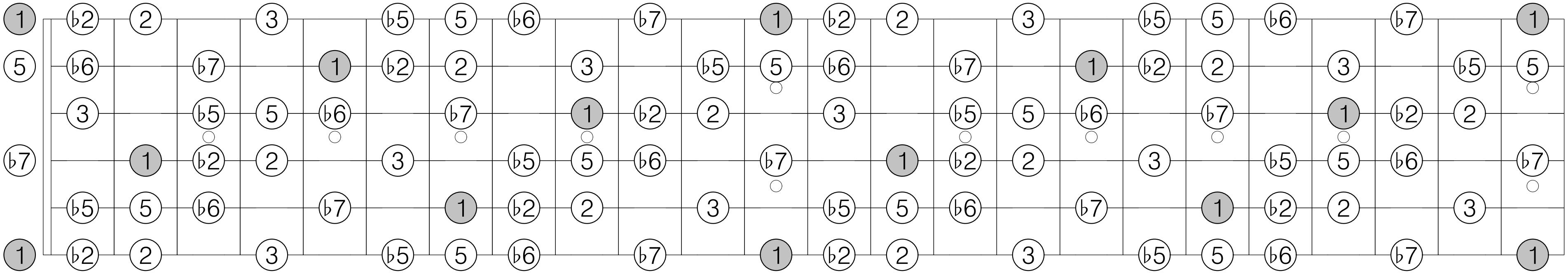

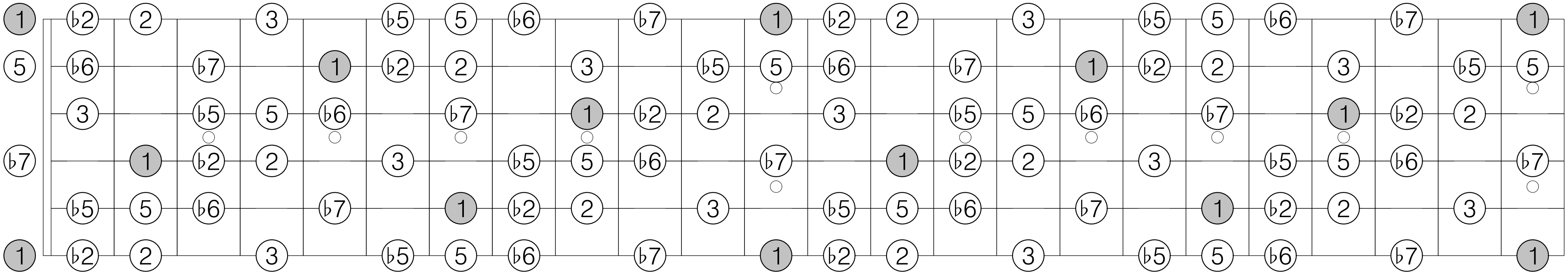

E transposition 2 of Mode 6 [1, 1, 2, 2]

1 ♭2 ♭3 4 ♭5 5 6 7 1 ♭2 ♭3 4 ♭5 5 6 7

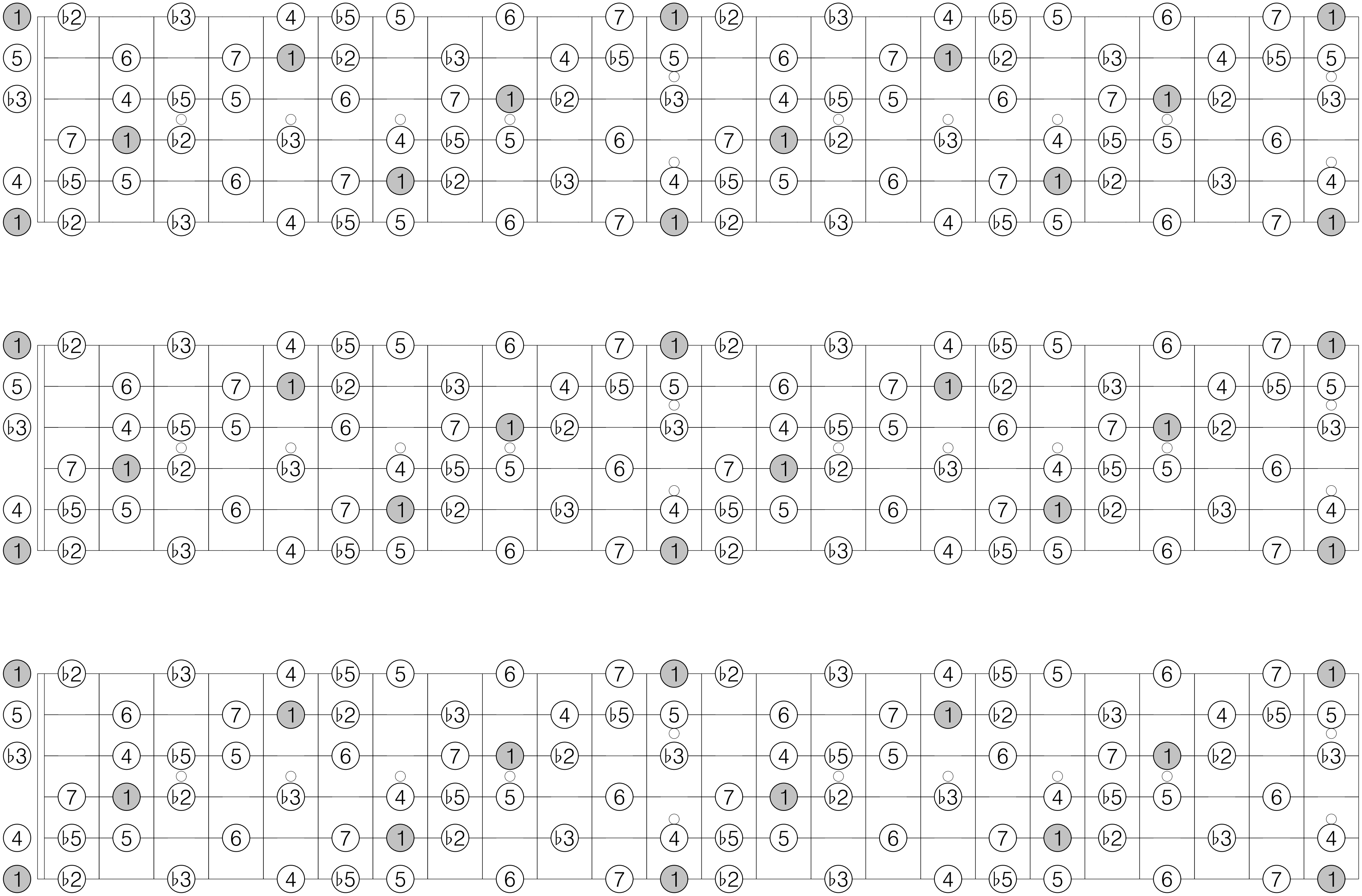

E transposition 3 of Mode 6 [1, 1, 2, 2]

1 2 3 4 ♭5 ♭6 ♭7 7 1 2 3 4 ♭5 ♭6 ♭7 7

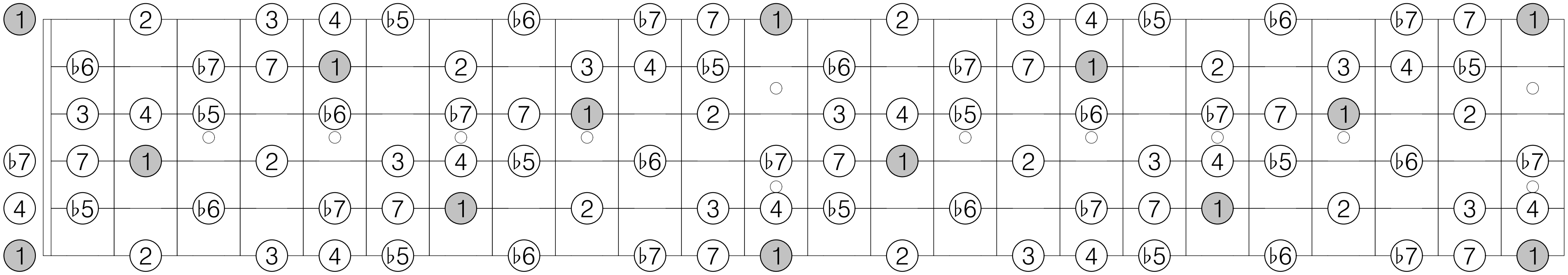

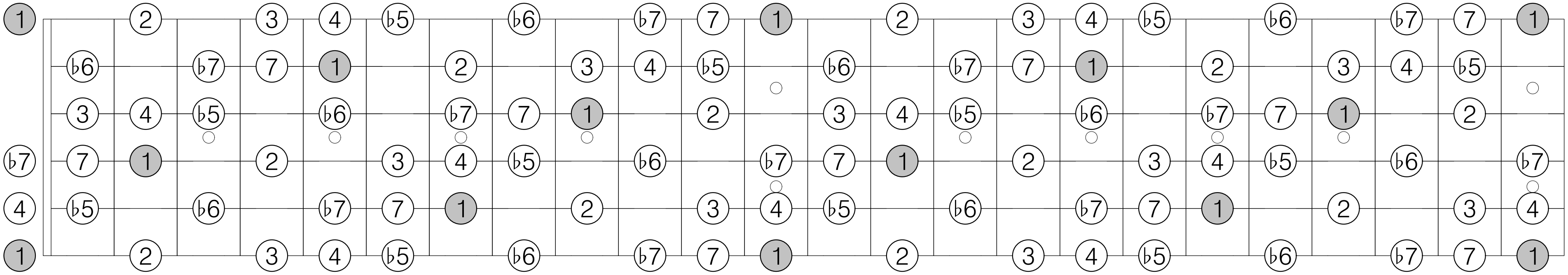

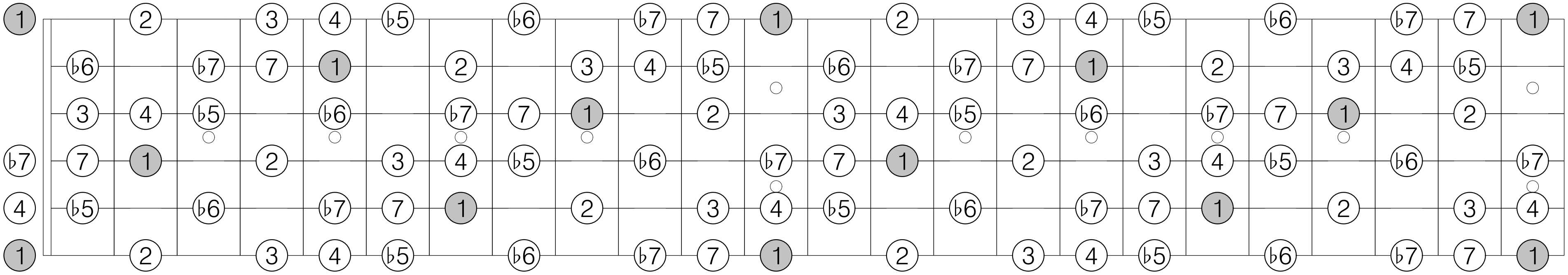

E transposition 4 of Mode 6 [1, 1, 2, 2]

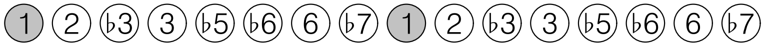

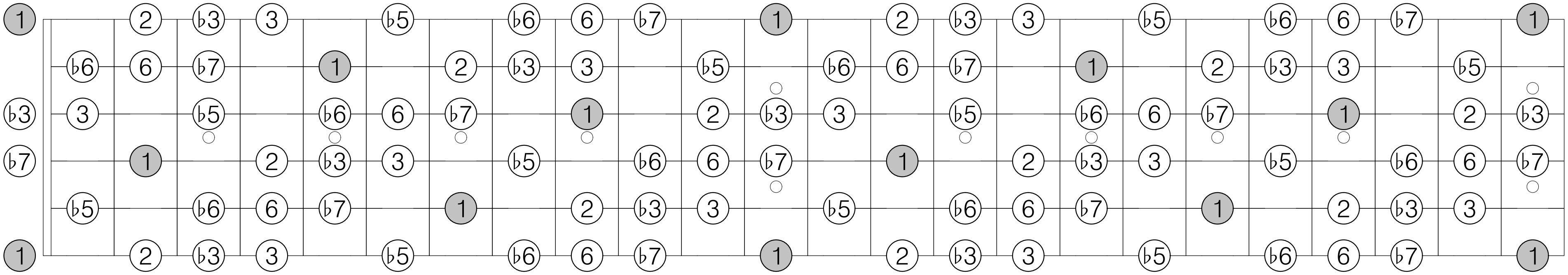

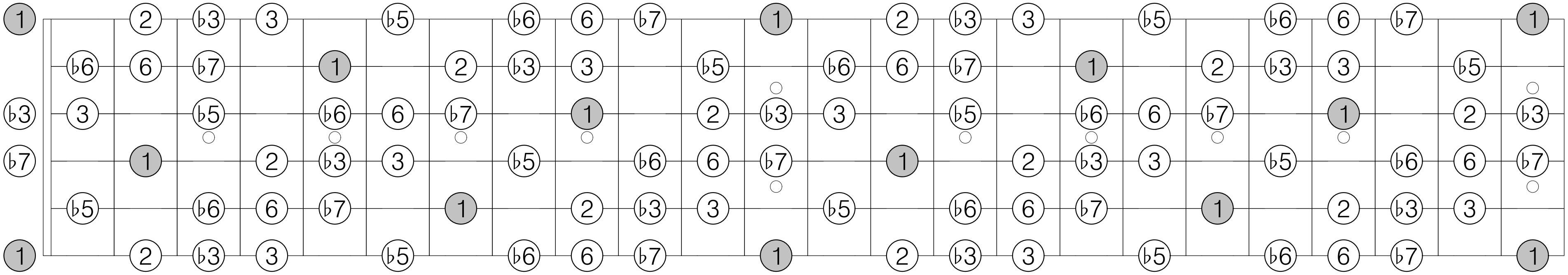

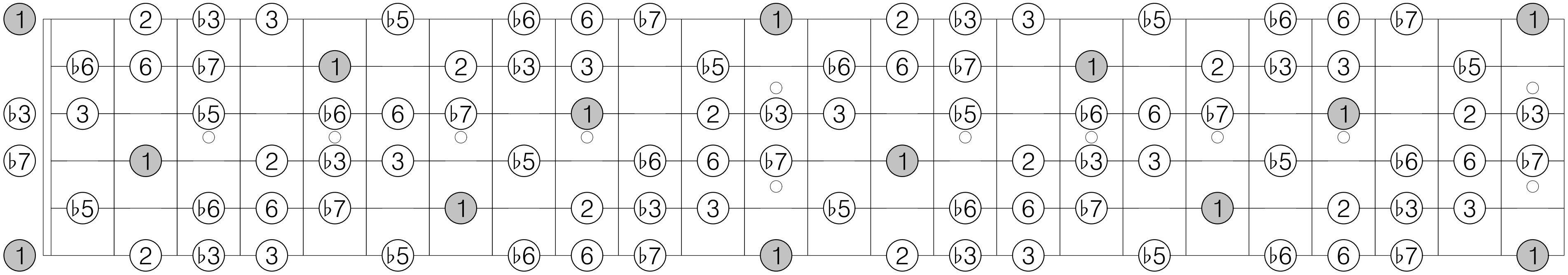

E transposition 1 of Mode 7 [1, 1, 1, 2, 1]

1 ♭2 2 ♭3 4 ♭5 5 ♭6 6 7 1 ♭2 2 ♭3 4 ♭5 5 ♭6 6 7

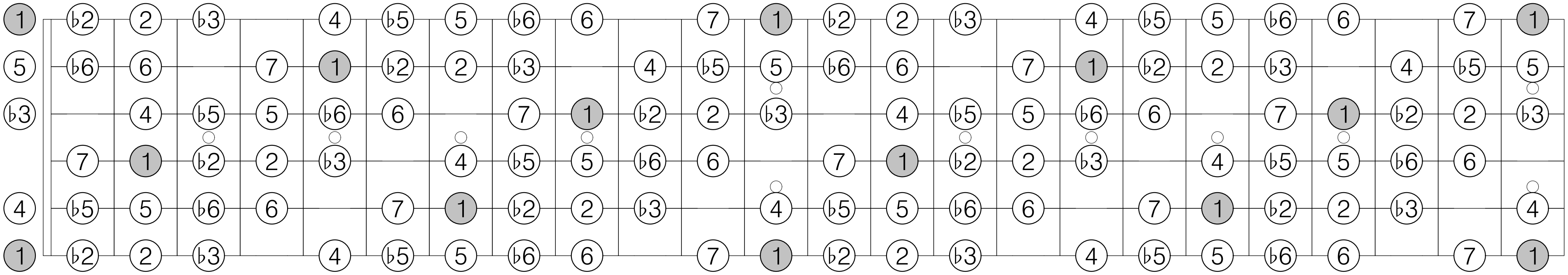

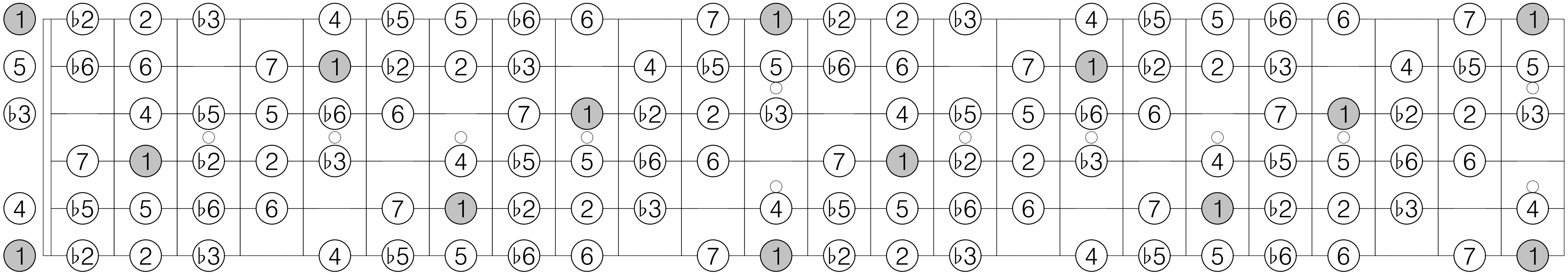

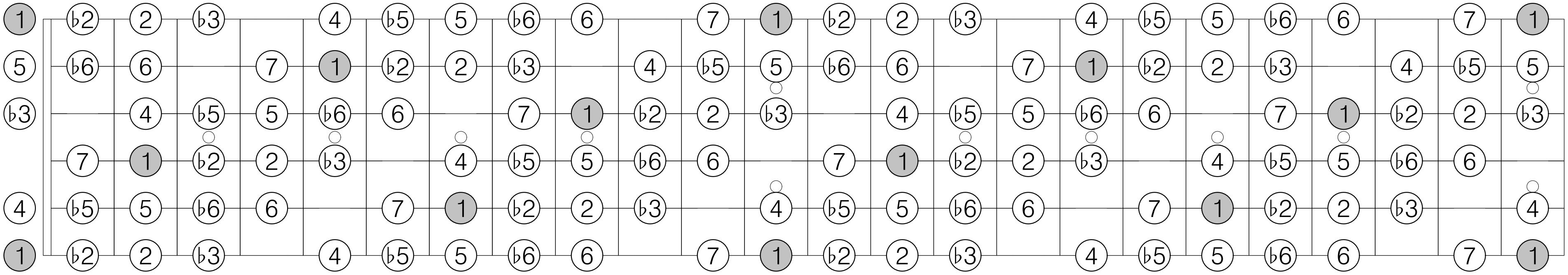

E transposition 2 of Mode 7 [1, 1, 1, 2, 1]

1 ♭2 2 3 4 ♭5 5 ♭6 ♭7 7 1 ♭2 2 3 4 ♭5 5 ♭6 ♭7 7

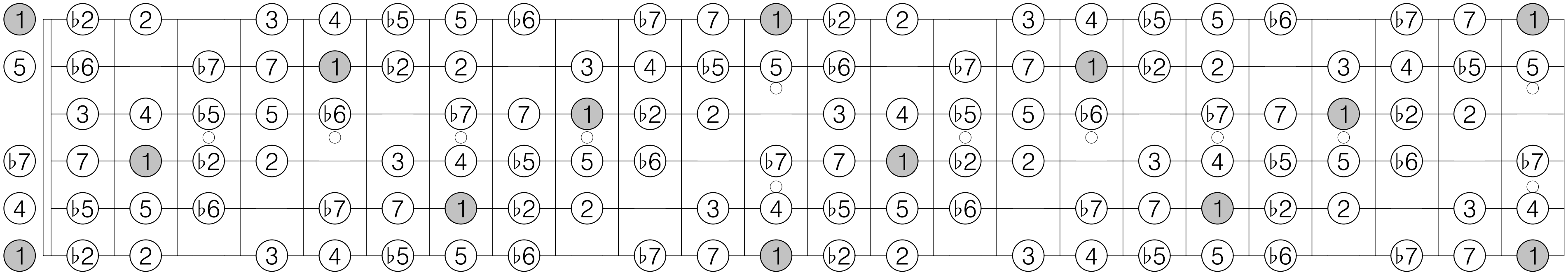

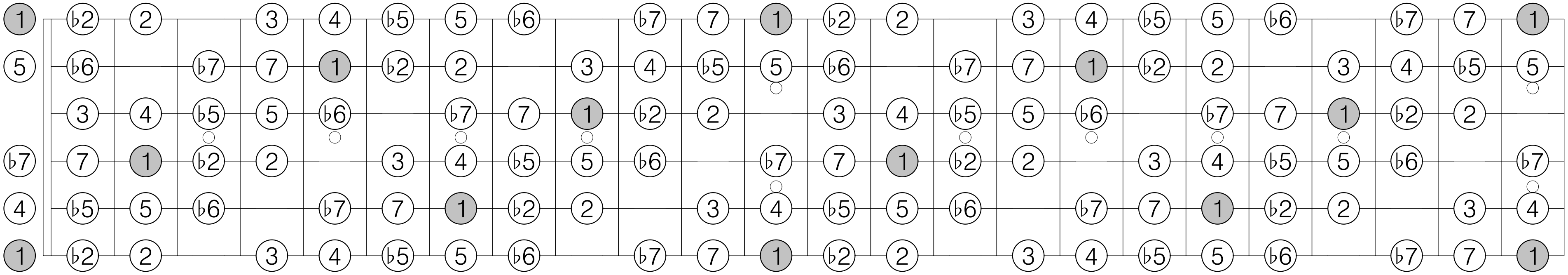

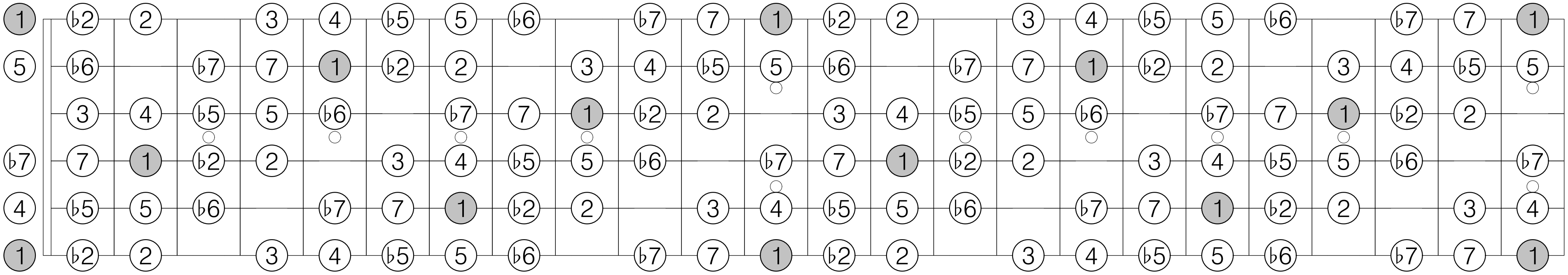

E transposition 3 of Mode 7 [1, 1, 1, 2, 1]

1 ♭2 ♭3 3 4 ♭5 5 6 ♭7 7 1 ♭2 ♭3 3 4 ♭5 5 6 ♭7 7

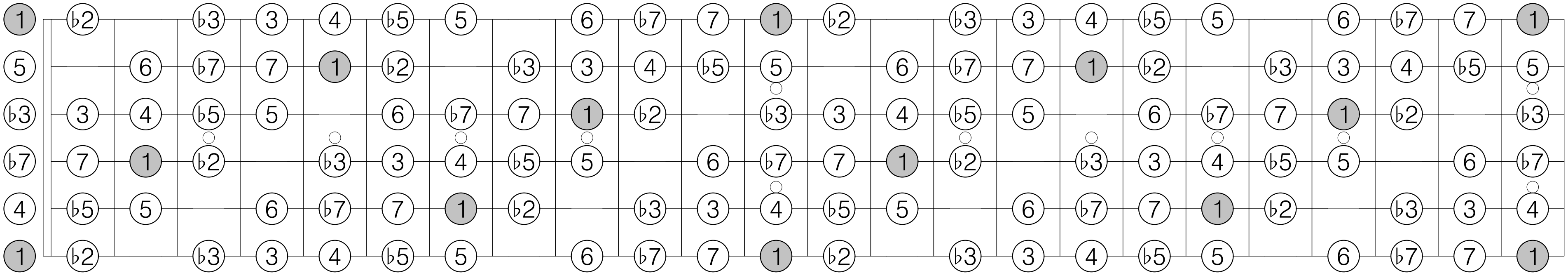

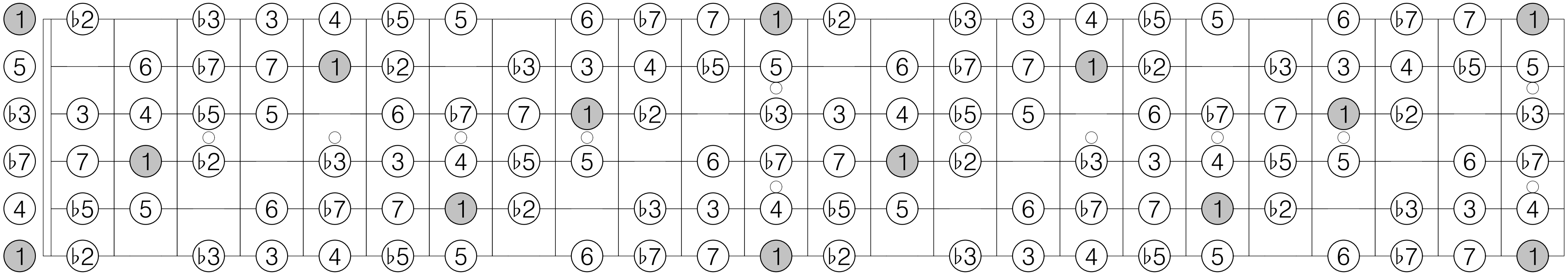

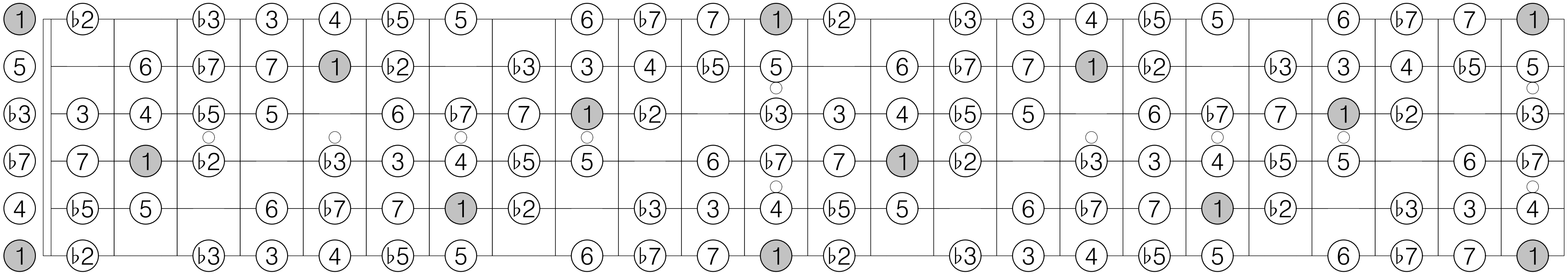

E transposition 4 of Mode 7 [1, 1, 1, 2, 1]

1 2 ♭3 3 4 ♭5 ♭6 6 ♭7 7 1 2 ♭3 3 4 ♭5 ♭6 6 ♭7 7

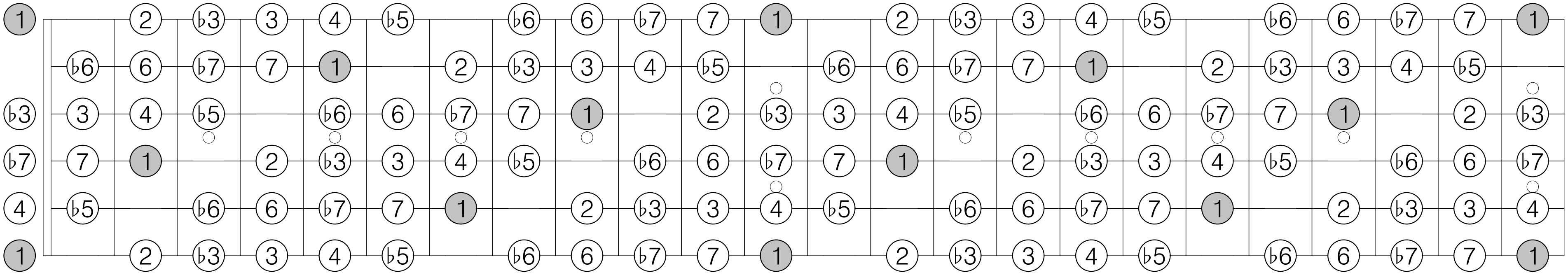

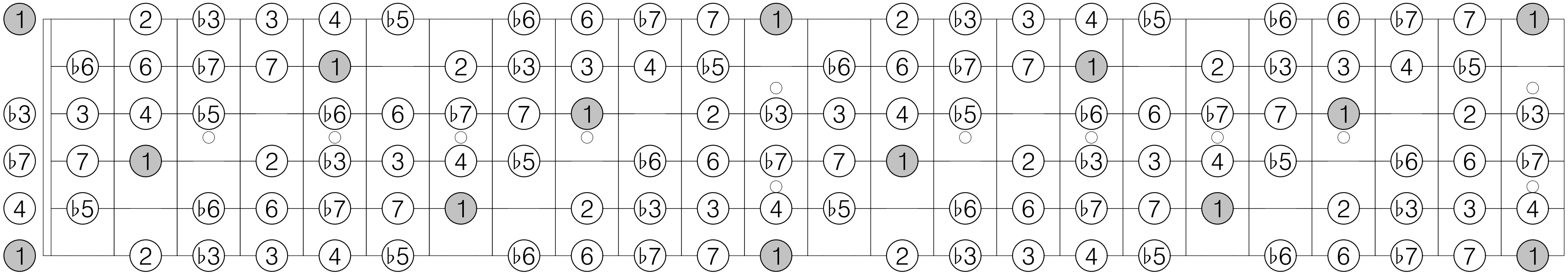

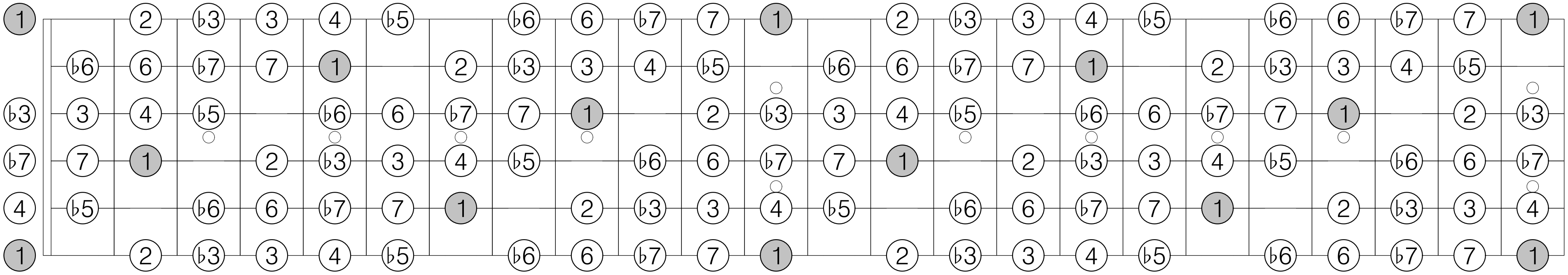

E transposition 5 of Mode 7 [1, 1, 1, 2, 1]

1 ♭2 2 ♭3 3 ♭5 5 ♭6 6 ♭7 1 ♭2 2 ♭3 3 ♭5 5 ♭6 6 ♭7

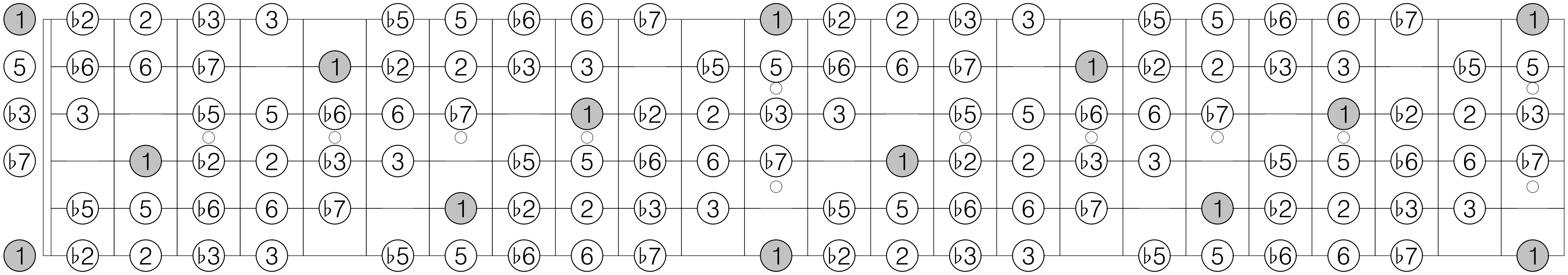

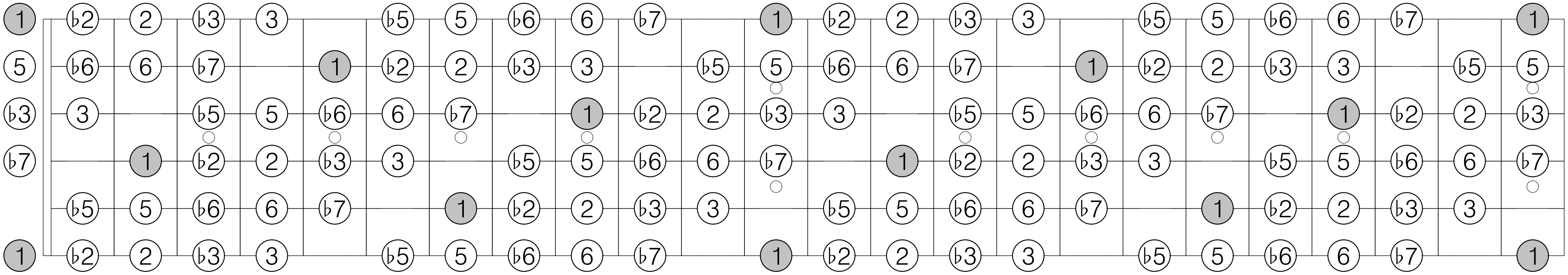

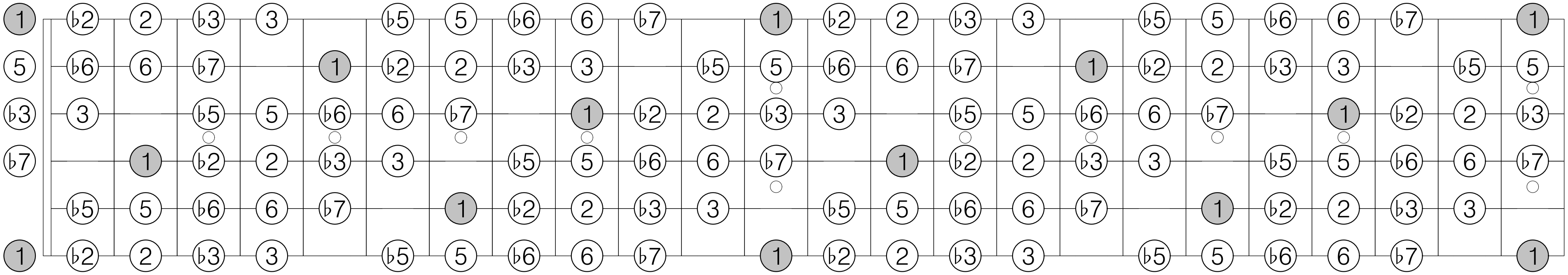

F transposition 1 of Mode 1 [2]

1 2 3 ♭5 ♭6 ♭7 1 2 3 ♭5 ♭6 ♭7

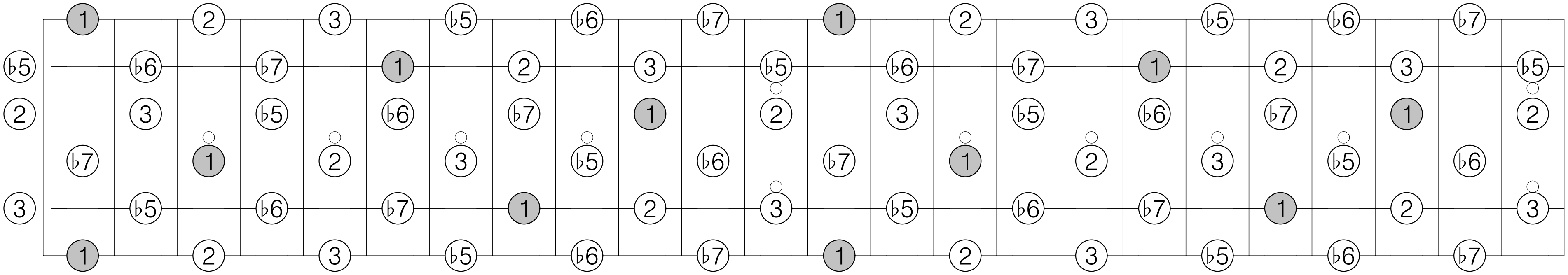

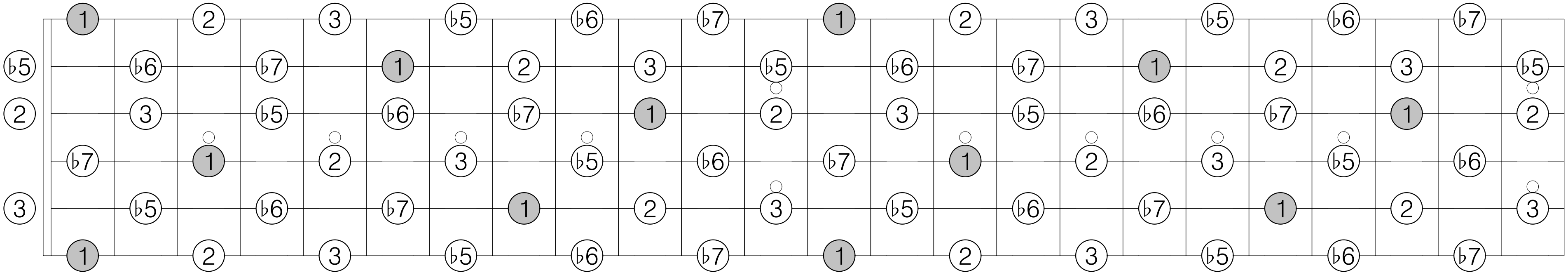

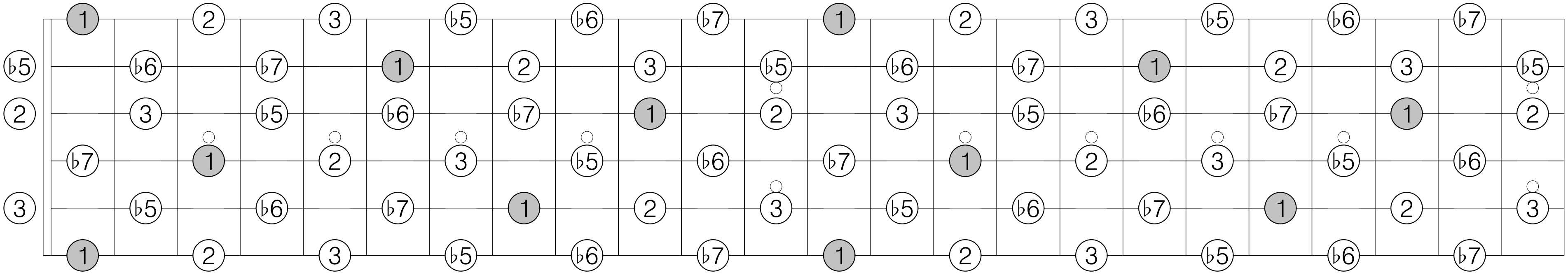

F transposition 1 of Mode 2 [1, 2]

1 ♭2 ♭3 3 ♭5 5 6 ♭7 1 ♭2 ♭3 3 ♭5 5 6 ♭7

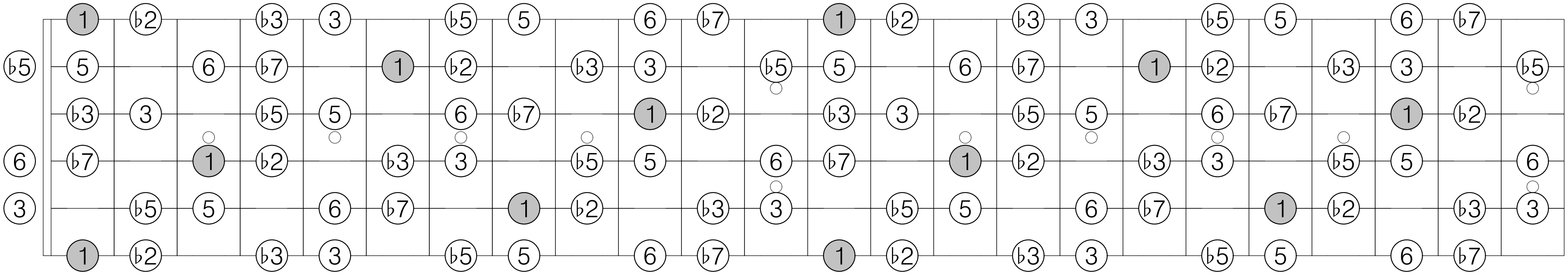

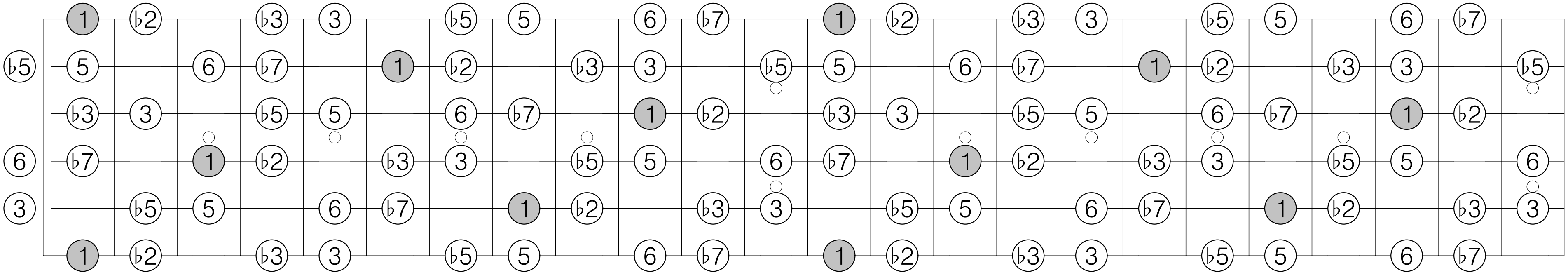

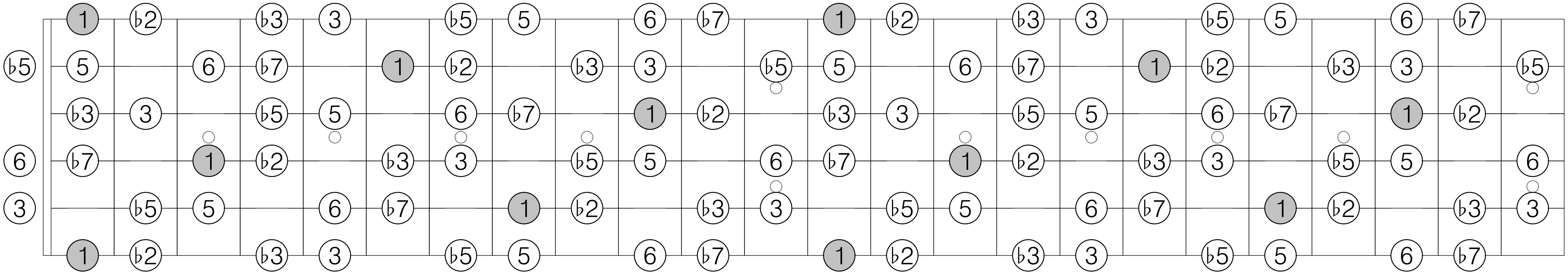

F transposition 2 of Mode 2 [1, 2]

1 2 ♭3 4 ♭5 ♭6 6 7 1 2 ♭3 4 ♭5 ♭6 6 7

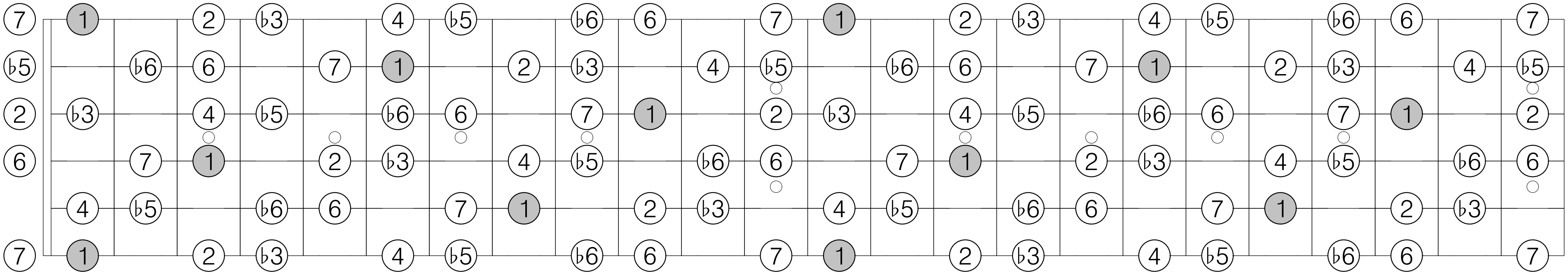

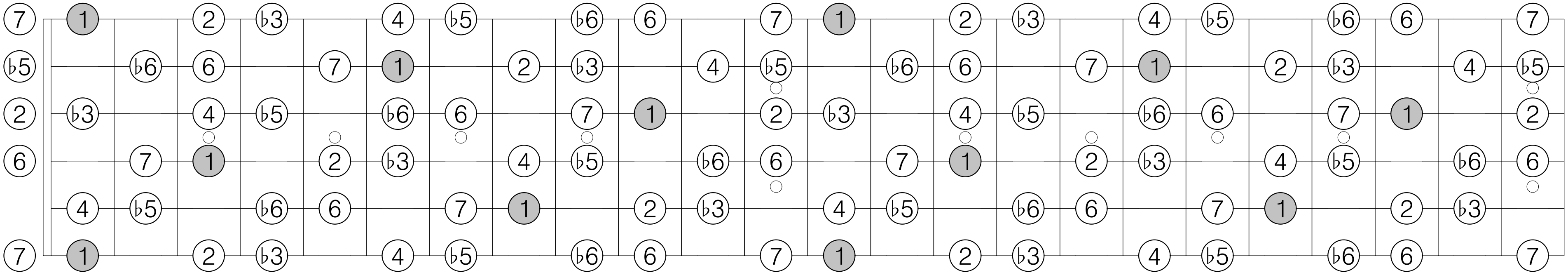

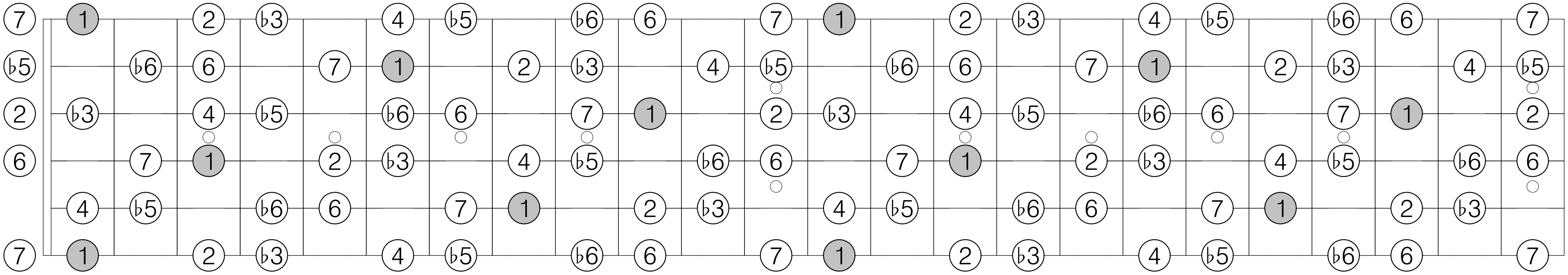

F transposition 1 of Mode 3 [1, 1, 2]

1 ♭2 2 3 4 ♭5 ♭6 6 ♭7 1 ♭2 2 3 4 ♭5 ♭6 6 ♭7

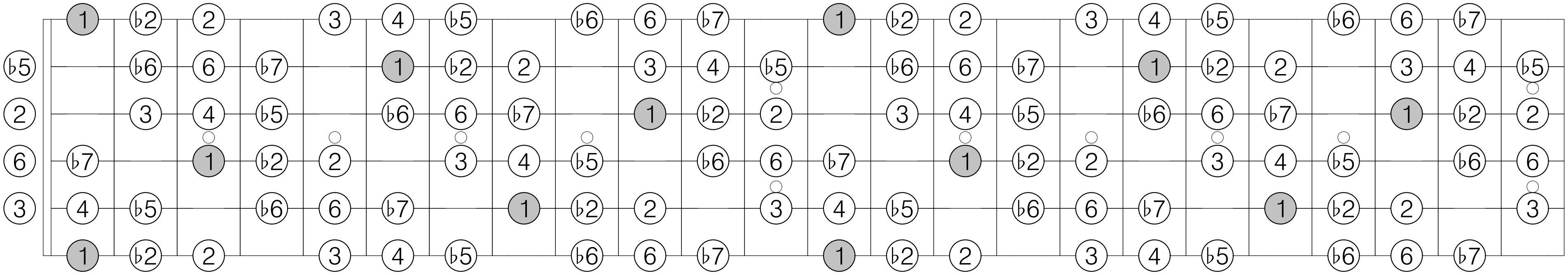

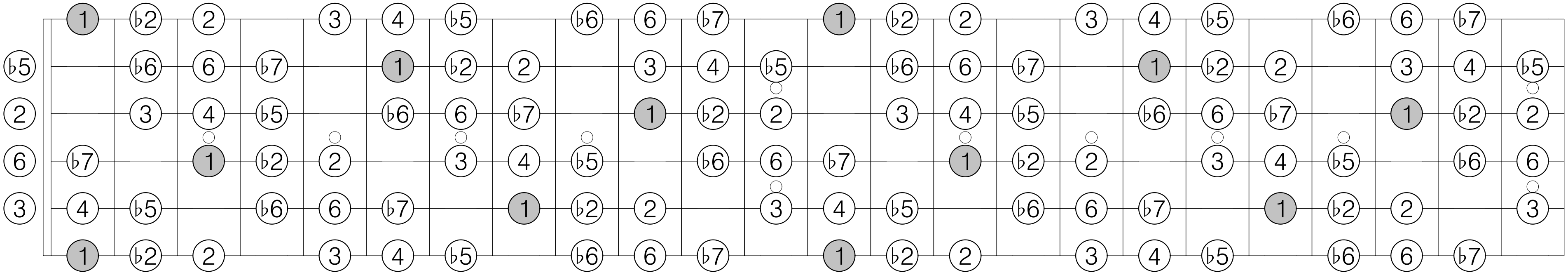

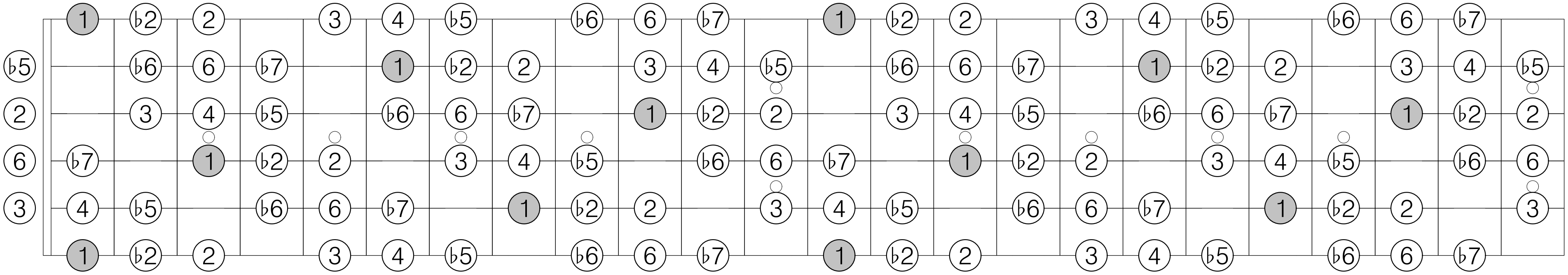

F transposition 2 of Mode 3 [1, 1, 2]

1 ♭2 ♭3 3 4 5 ♭6 6 7 1 ♭2 ♭3 3 4 5 ♭6 6 7

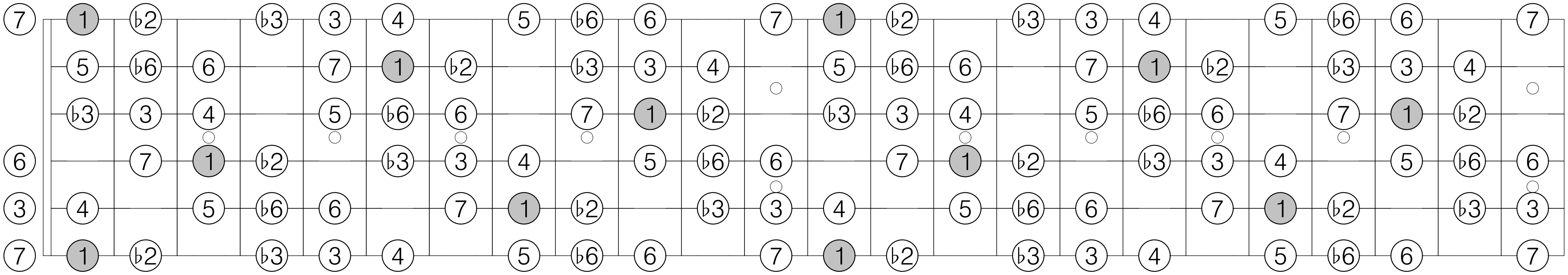

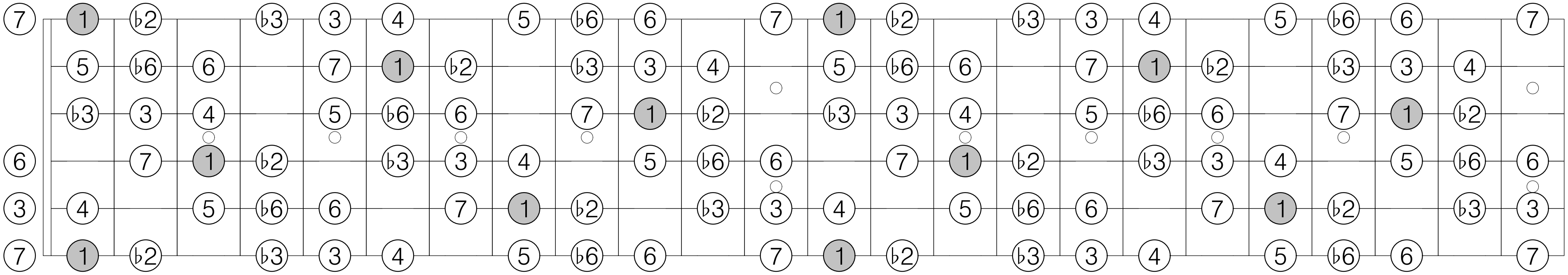

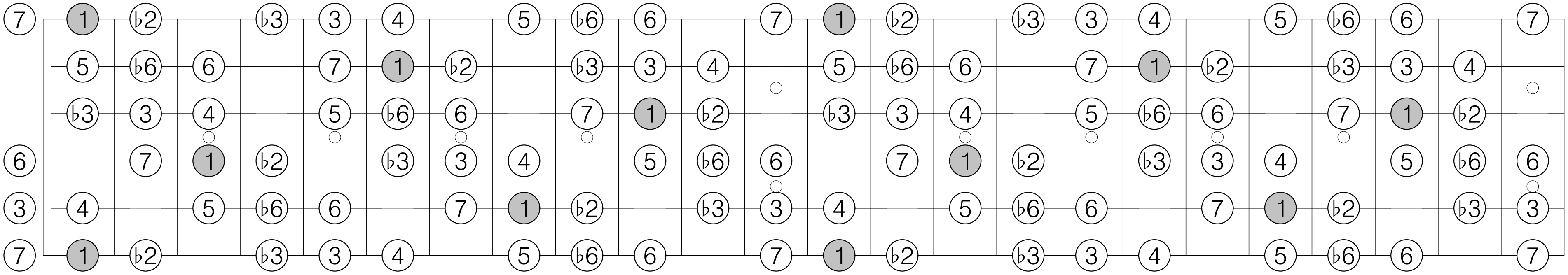

F transposition 3 of Mode 3 [1, 1, 2]

1 2 ♭3 3 ♭5 5 ♭6 ♭7 7 1 2 ♭3 3 ♭5 5 ♭6 ♭7 7

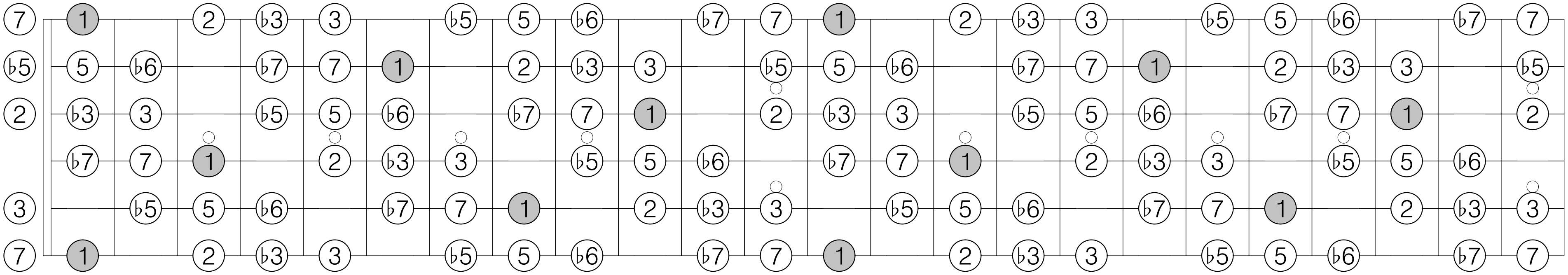

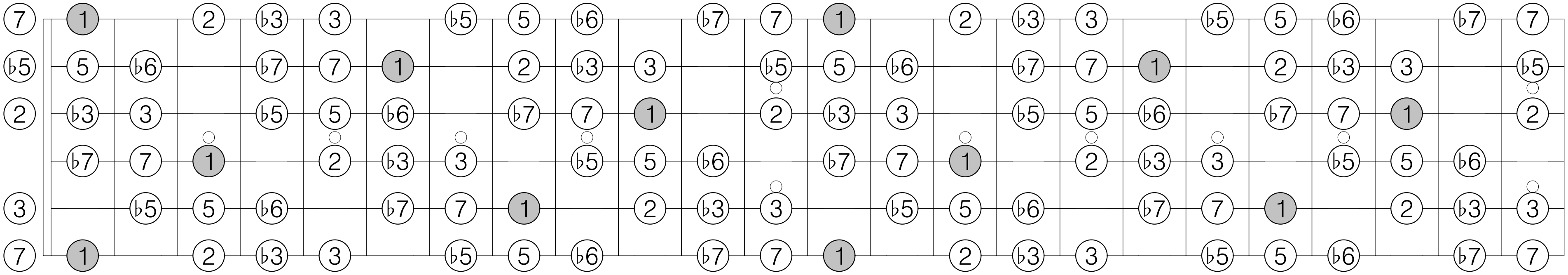

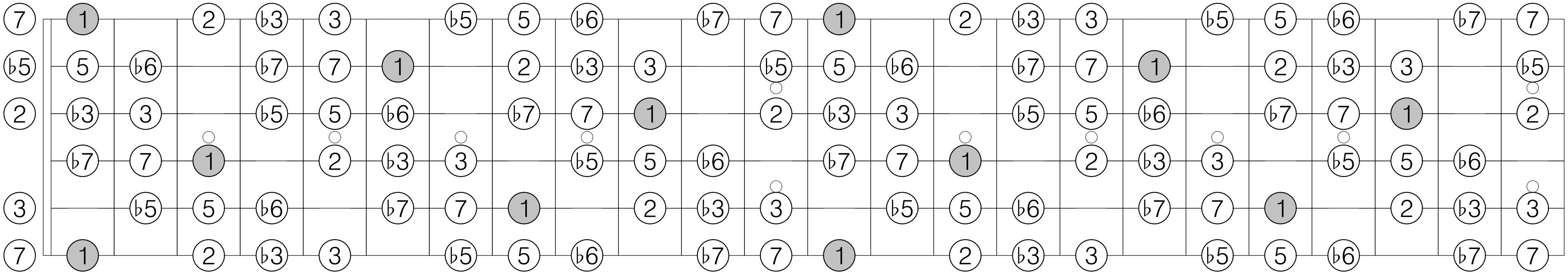

F transposition 1 of Mode 4 [1, 1, 3, 1]

1 ♭2 2 4 ♭5 5 ♭6 7 1 ♭2 2 4 ♭5 5 ♭6 7

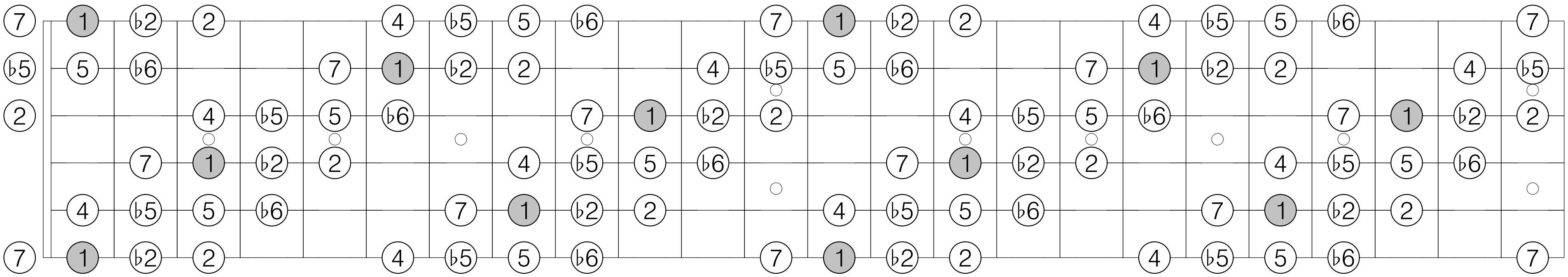

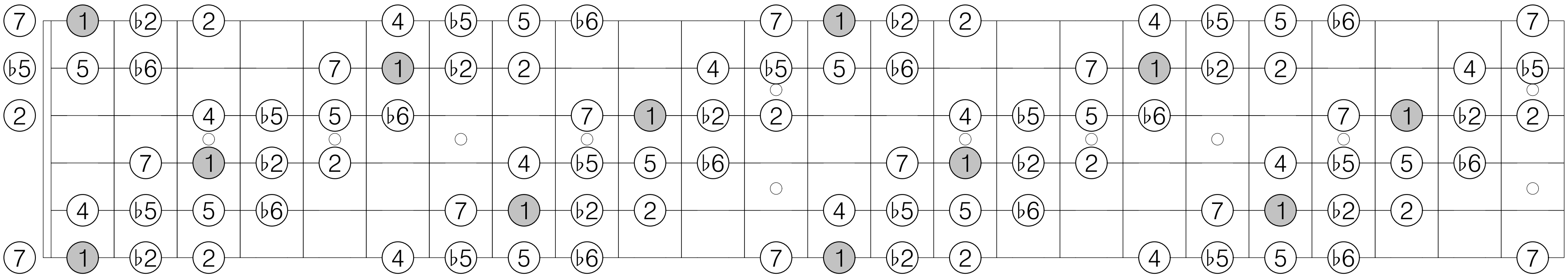

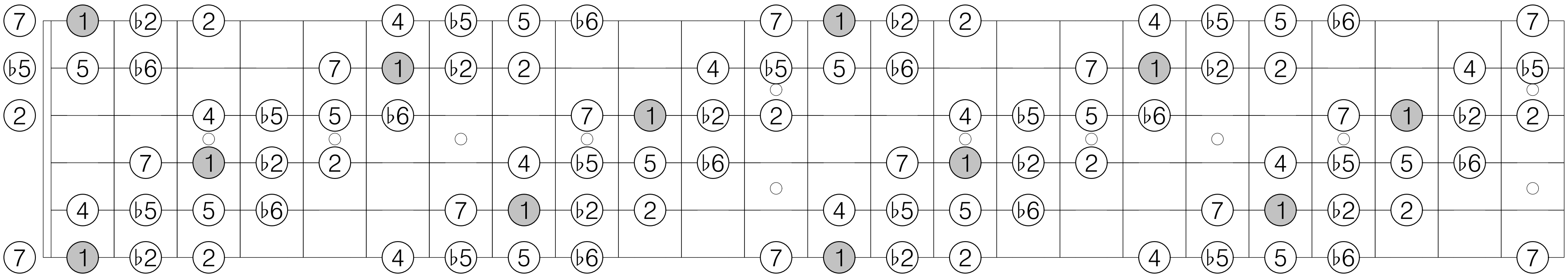

F transposition 2 of Mode 4 [1, 1, 3, 1]

1 ♭2 3 4 ♭5 5 ♭7 7 1 ♭2 3 4 ♭5 5 ♭7 7

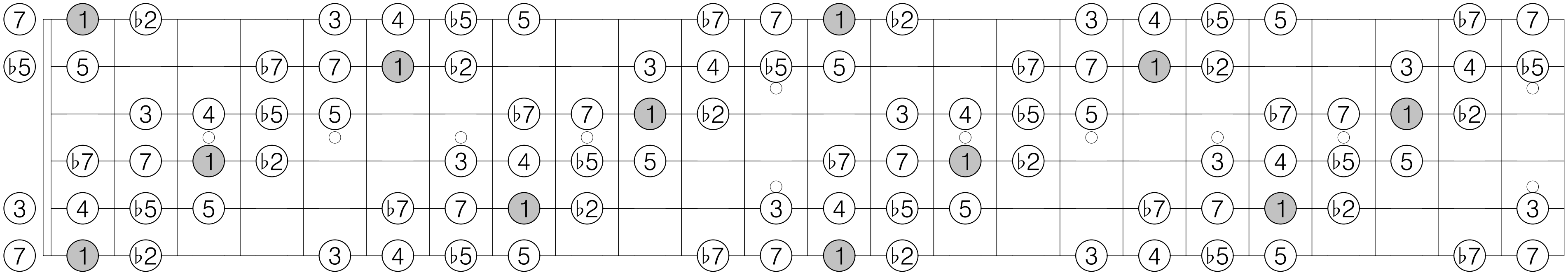

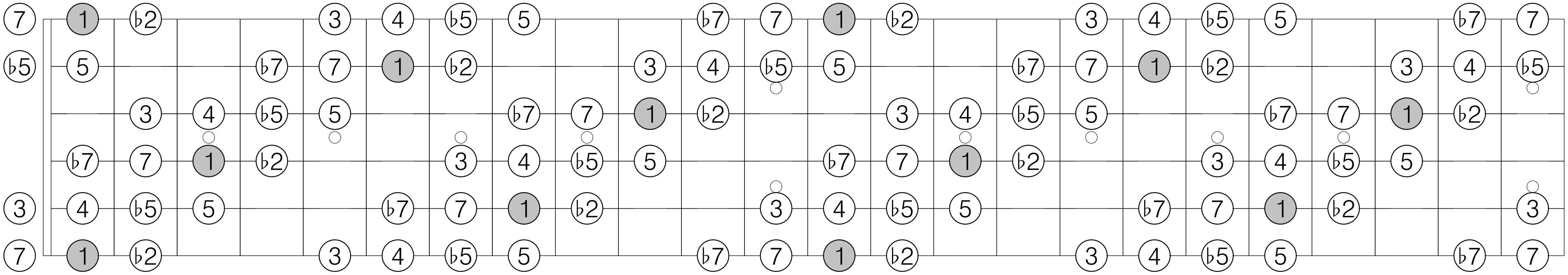

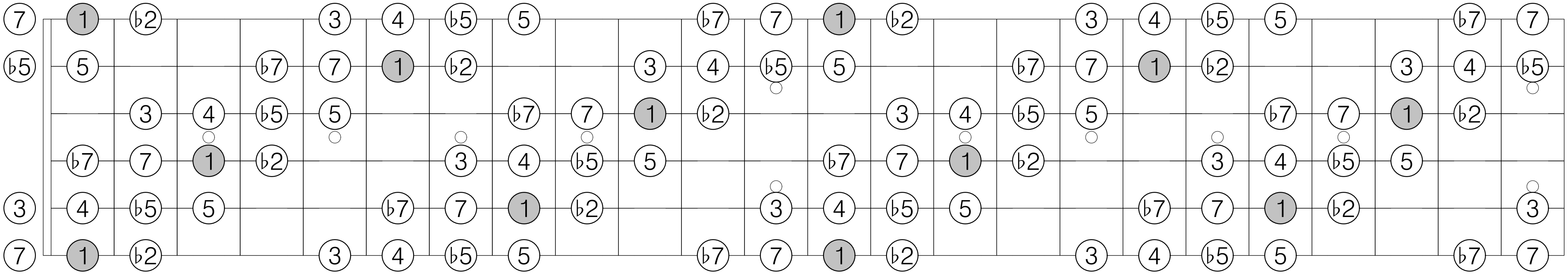

F transposition 3 of Mode 4 [1, 1, 3, 1]

1 ♭3 3 4 ♭5 6 ♭7 7 1 ♭3 3 4 ♭5 6 ♭7 7

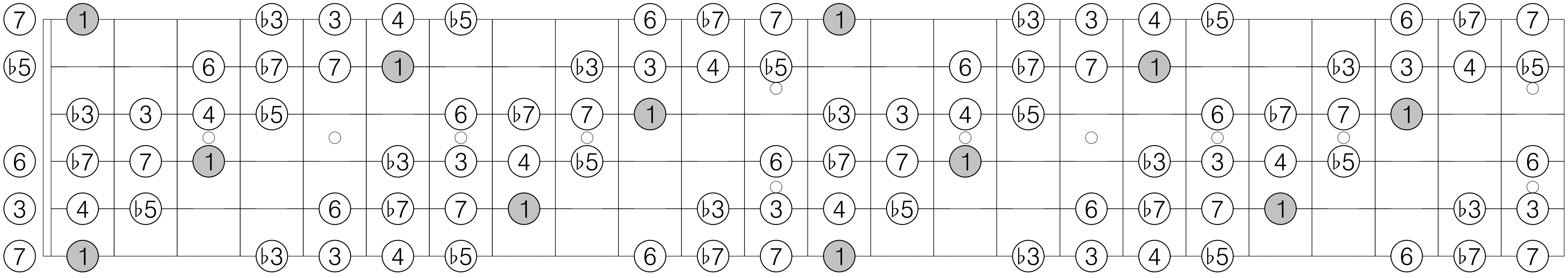

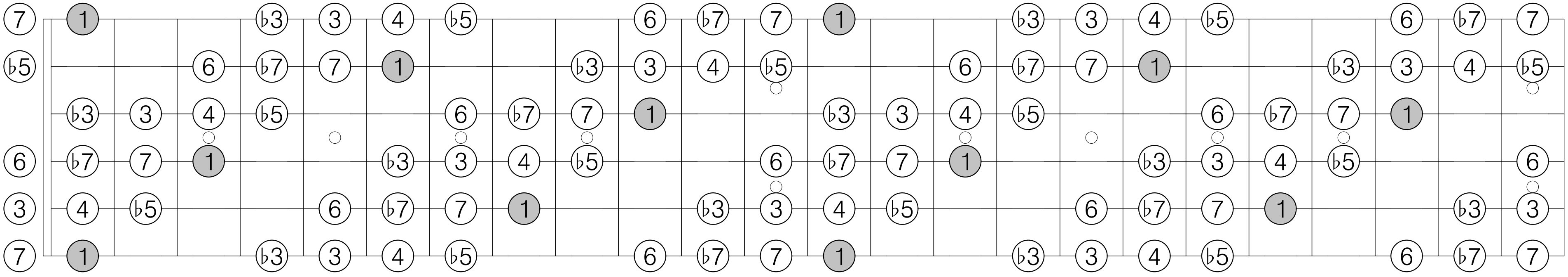

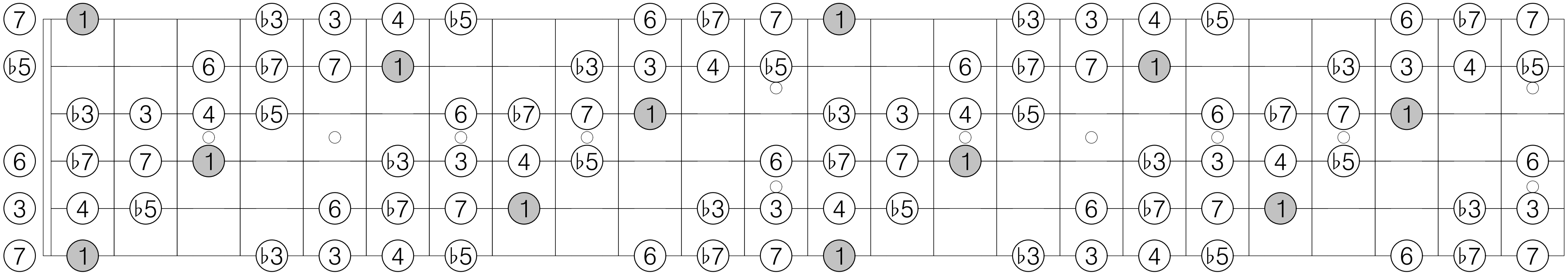

F transposition 4 of Mode 4 [1, 1, 3, 1]

1 ♭2 2 ♭3 ♭5 5 ♭6 6 1 ♭2 2 ♭3 ♭5 5 ♭6 6

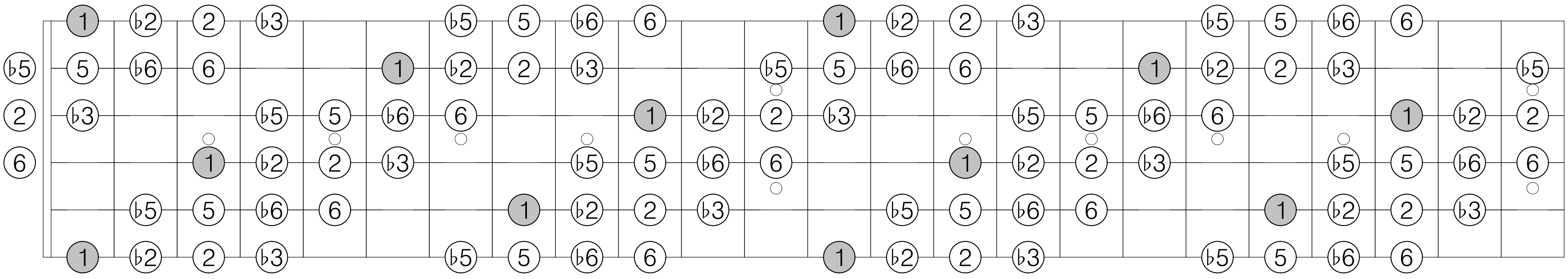

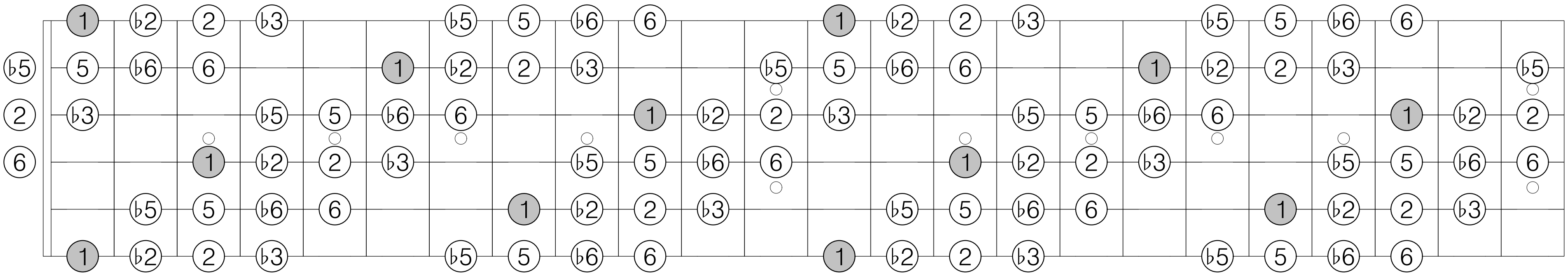

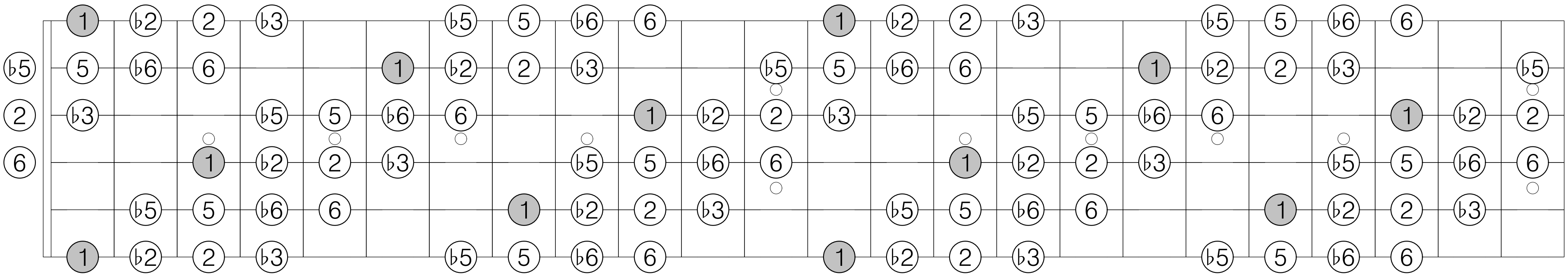

F transposition 1 of Mode 5 [1, 4, 1]

1 ♭2 4 ♭5 5 7 1 ♭2 4 ♭5 5 7

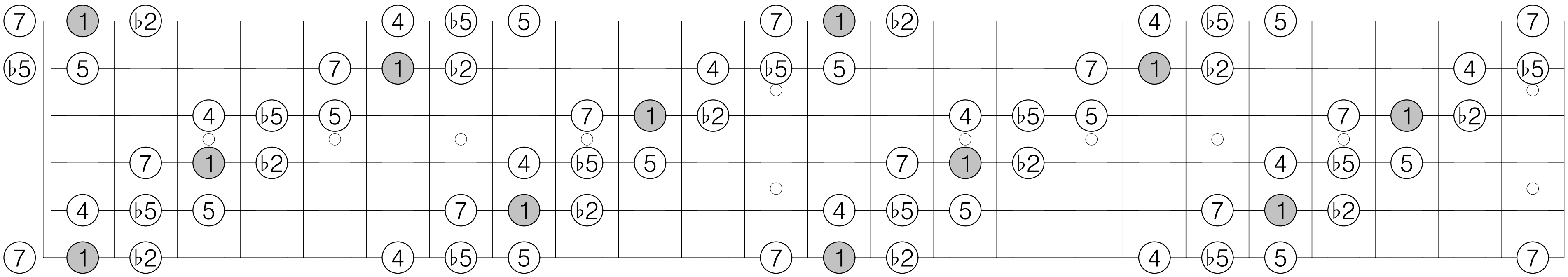

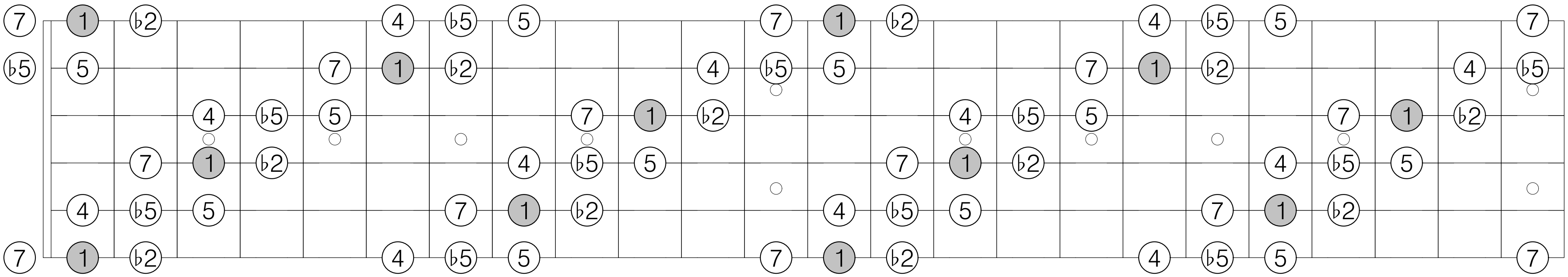

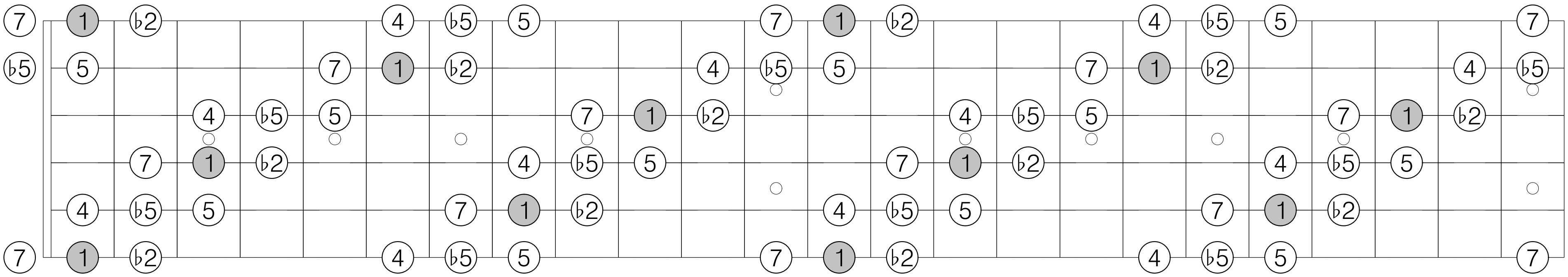

F transposition 2 of Mode 5 [1, 4, 1]

1 3 4 ♭5 ♭7 7 1 3 4 ♭5 ♭7 7

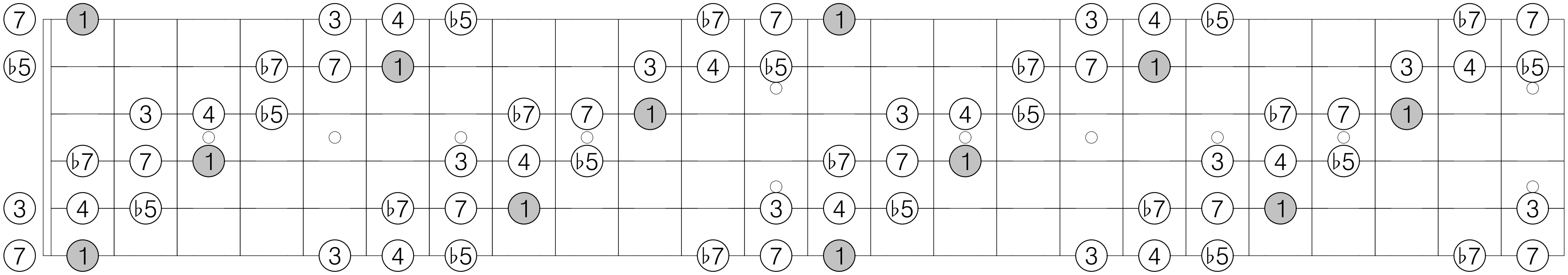

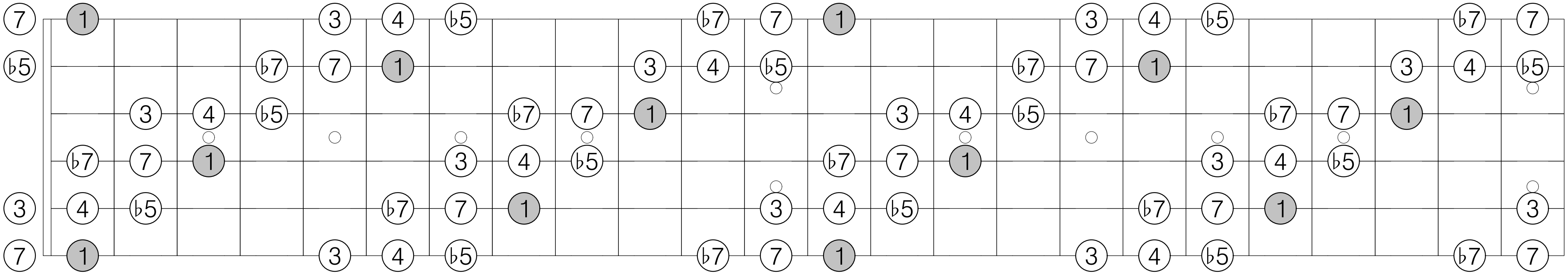

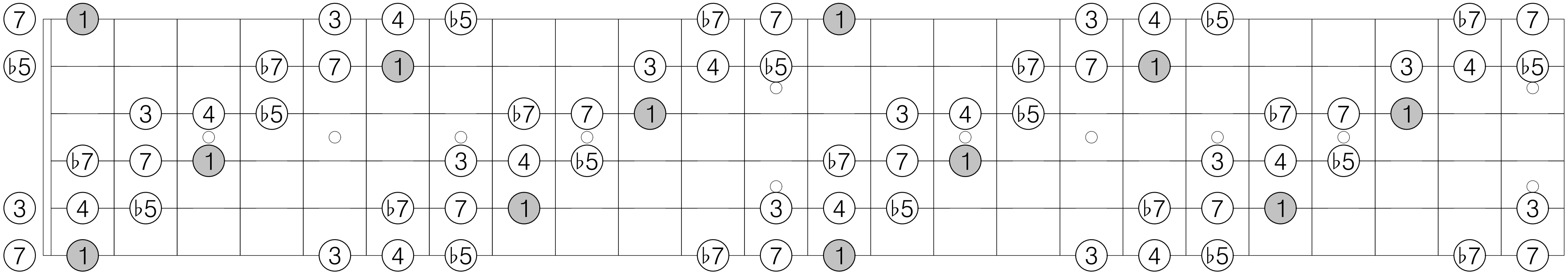

F transposition 3 of Mode 5 [1, 4, 1]

1 ♭2 2 ♭5 5 ♭6 1 ♭2 2 ♭5 5 ♭6

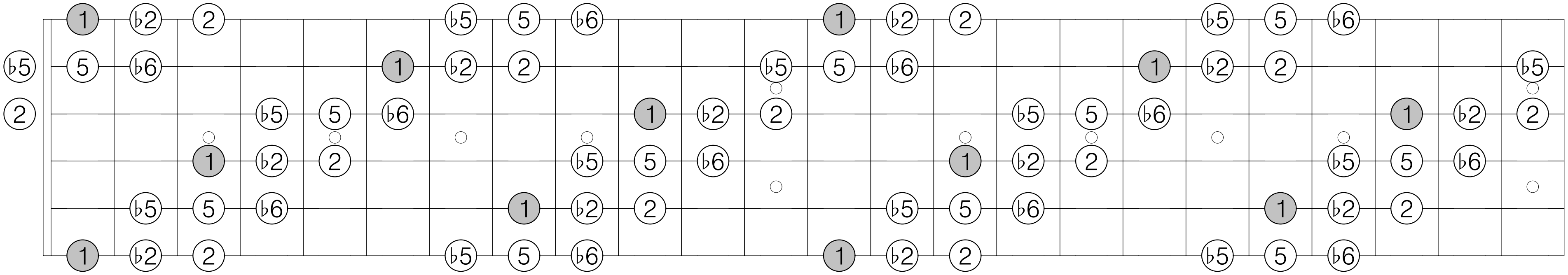

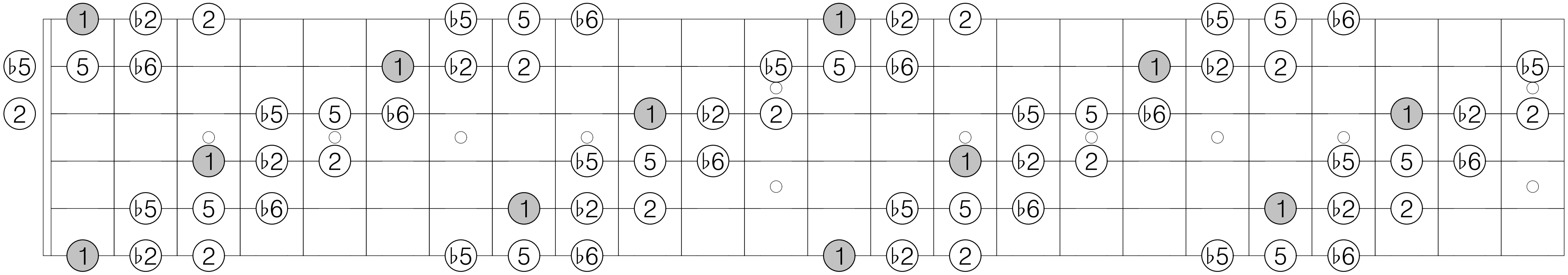

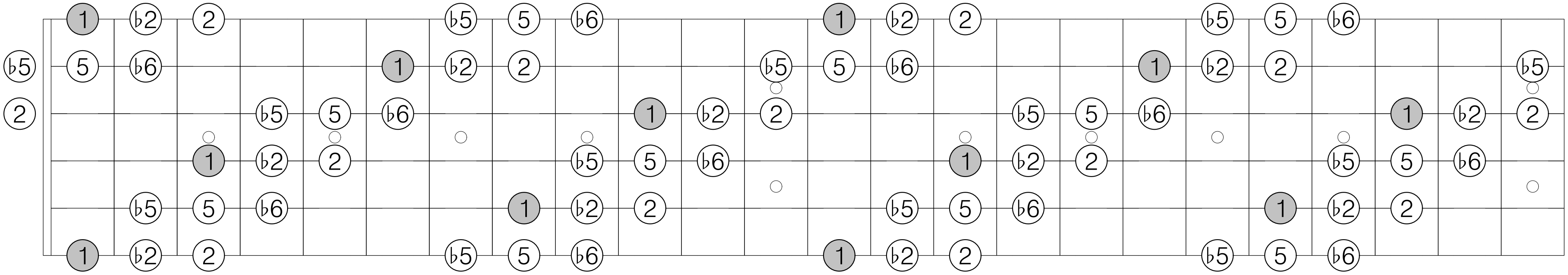

F transposition 1 of Mode 6 [1, 1, 2, 2]

1 ♭2 2 3 ♭5 5 ♭6 ♭7 1 ♭2 2 3 ♭5 5 ♭6 ♭7

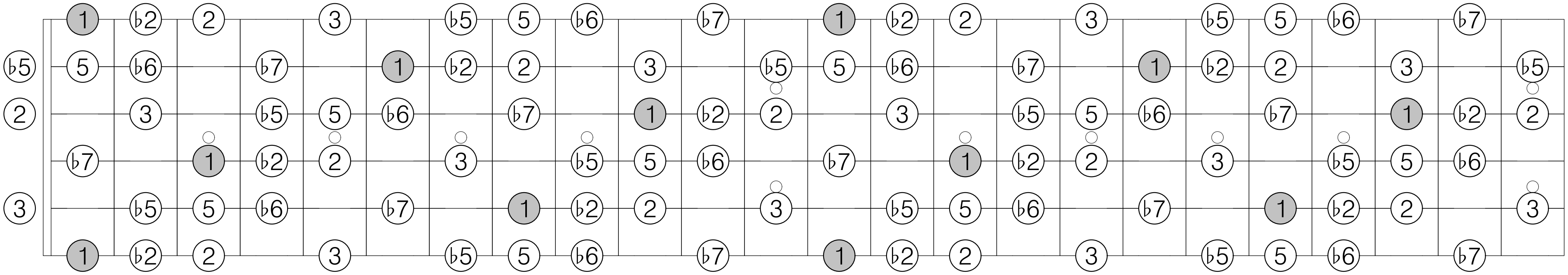

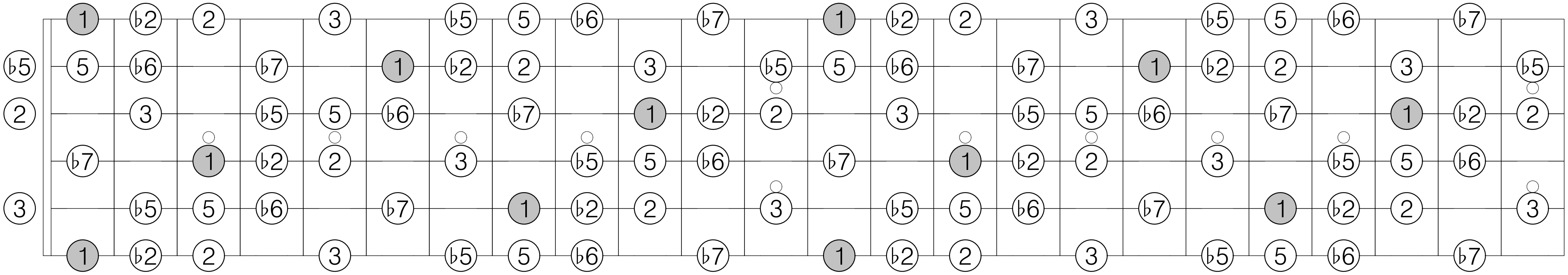

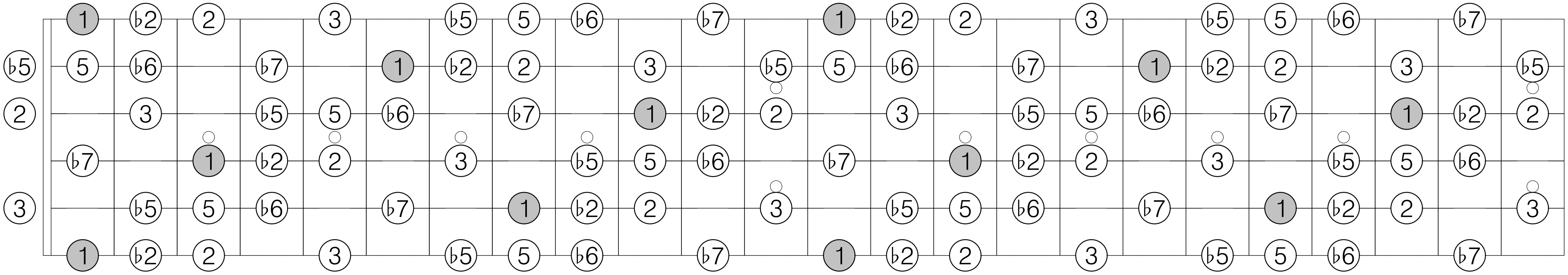

F transposition 2 of Mode 6 [1, 1, 2, 2]

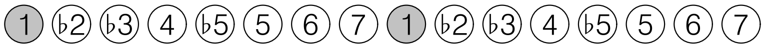

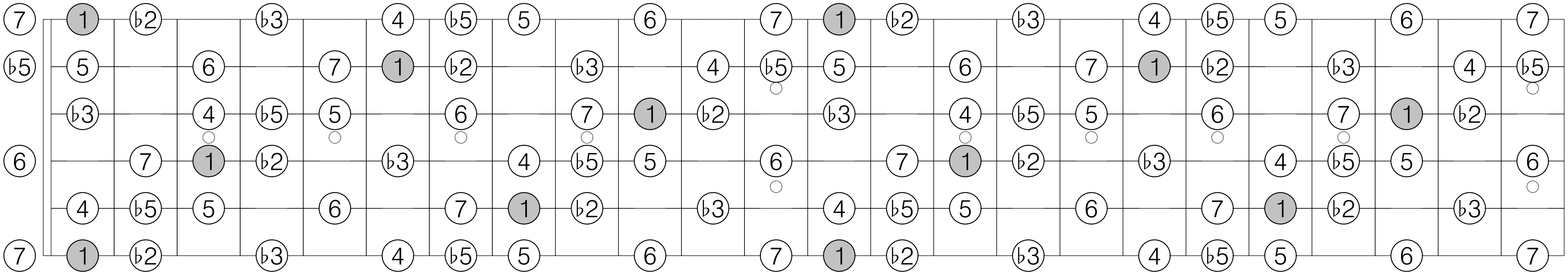

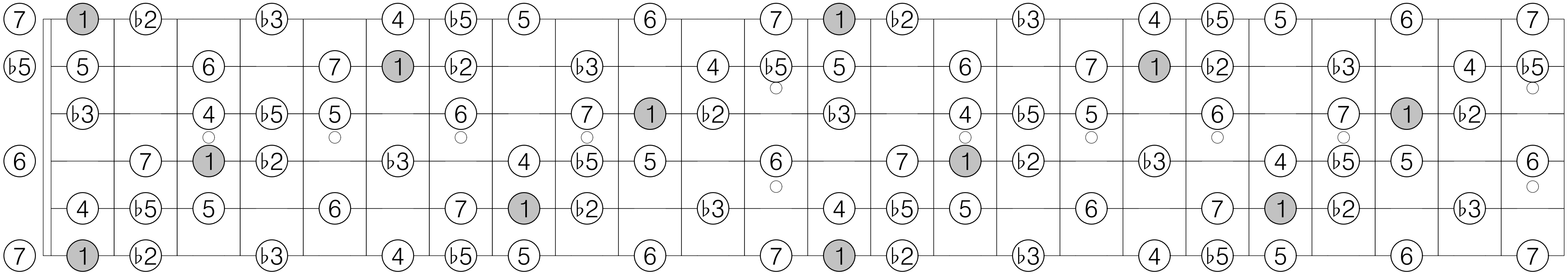

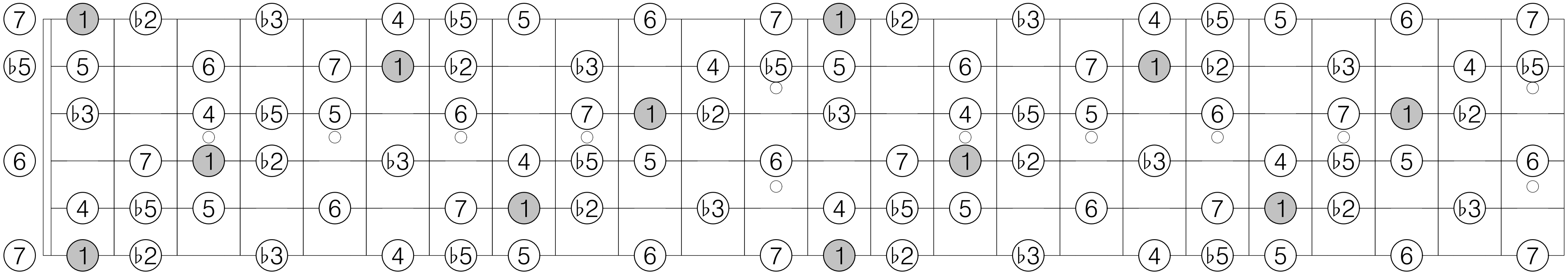

F transposition 3 of Mode 6 [1, 1, 2, 2]

1 2 3 4 ♭5 ♭6 ♭7 7 1 2 3 4 ♭5 ♭6 ♭7 7

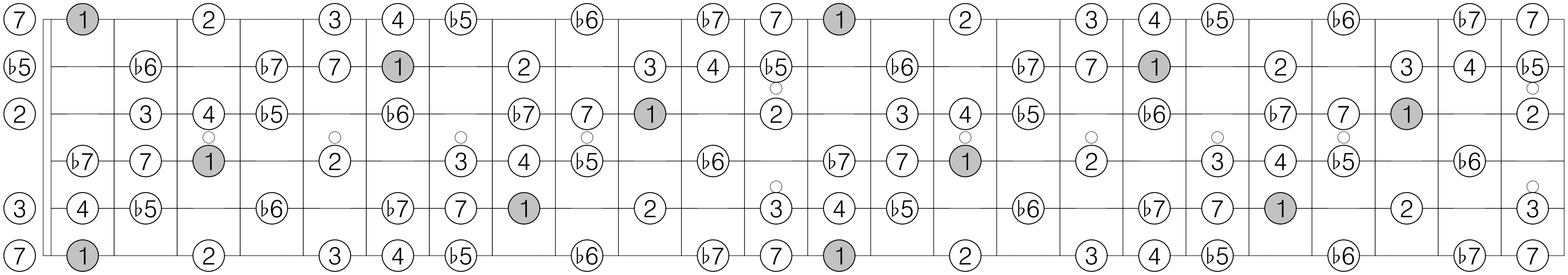

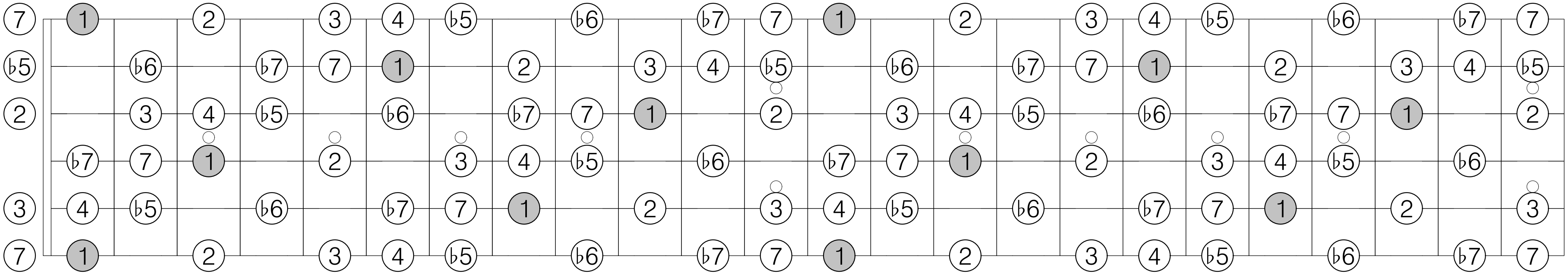

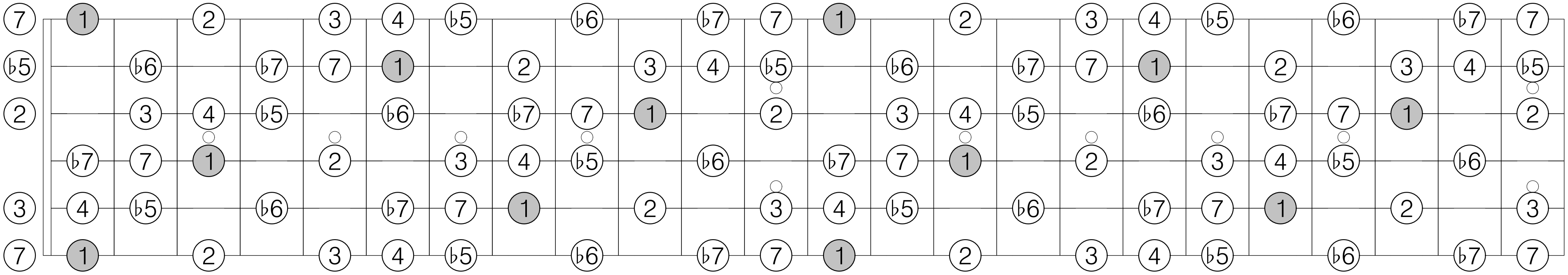

F transposition 4 of Mode 6 [1, 1, 2, 2]

1 2 ♭3 3 ♭5 ♭6 6 ♭7 1 2 ♭3 3 ♭5 ♭6 6 ♭7

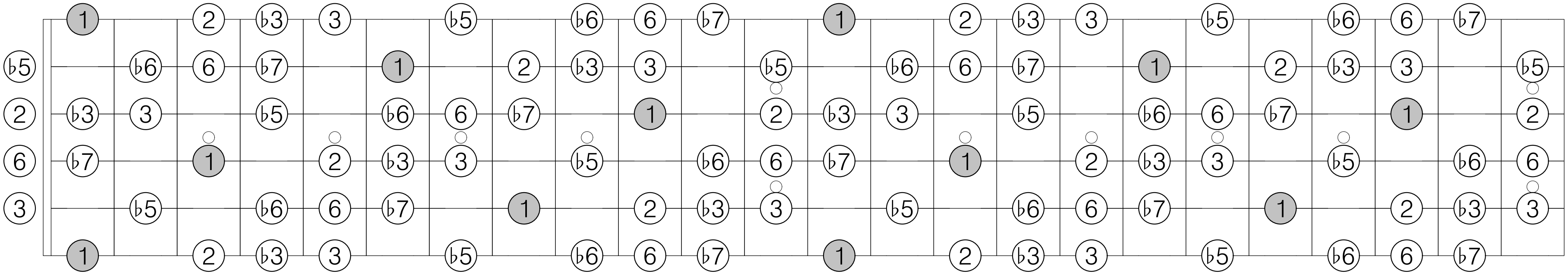

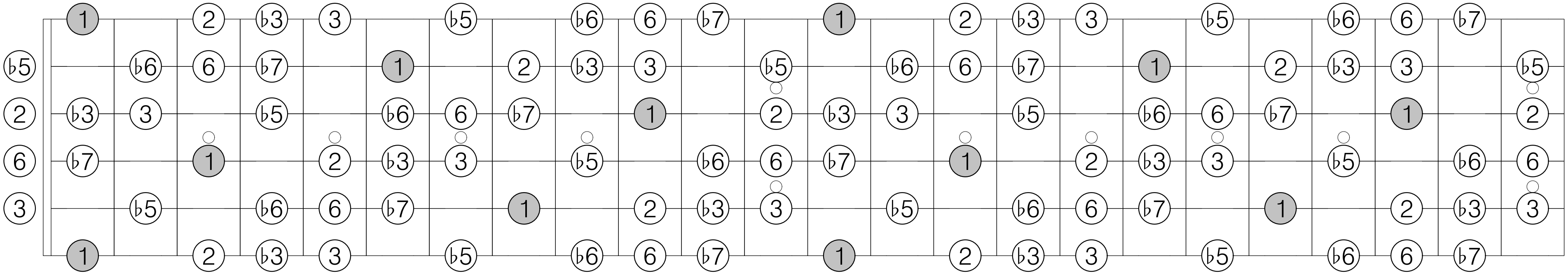

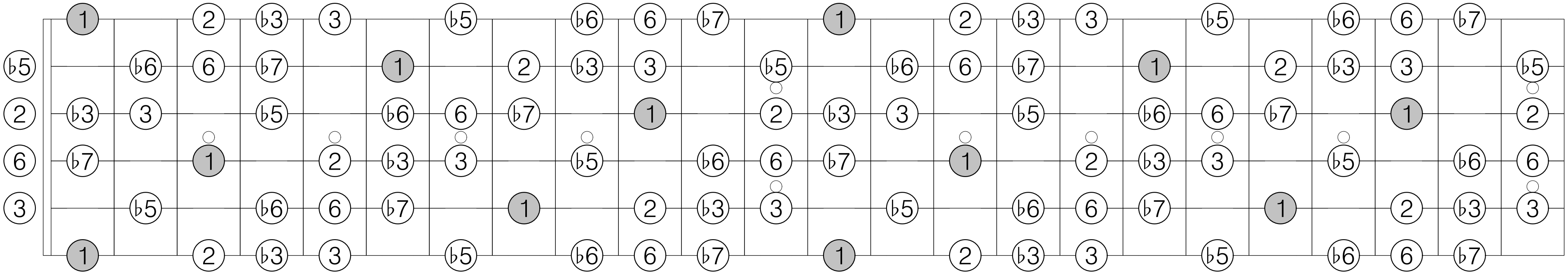

F transposition 1 of Mode 7 [1, 1, 1, 2, 1]

1 ♭2 2 ♭3 4 ♭5 5 ♭6 6 7 1 ♭2 2 ♭3 4 ♭5 5 ♭6 6 7

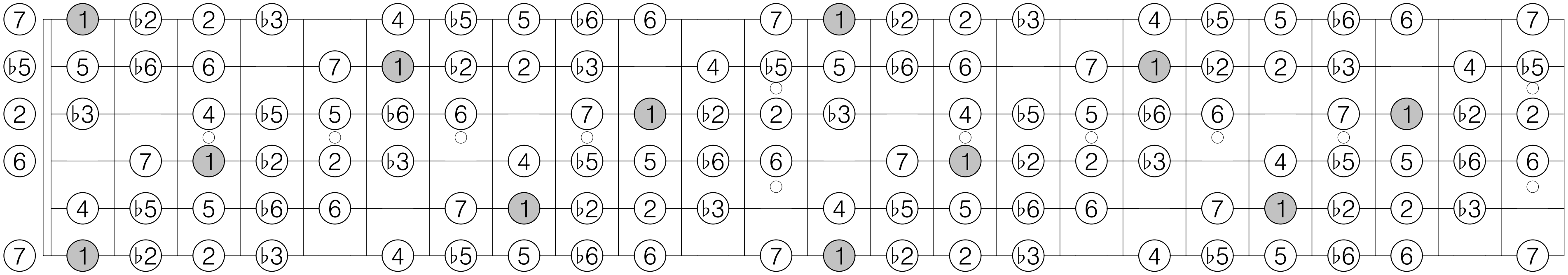

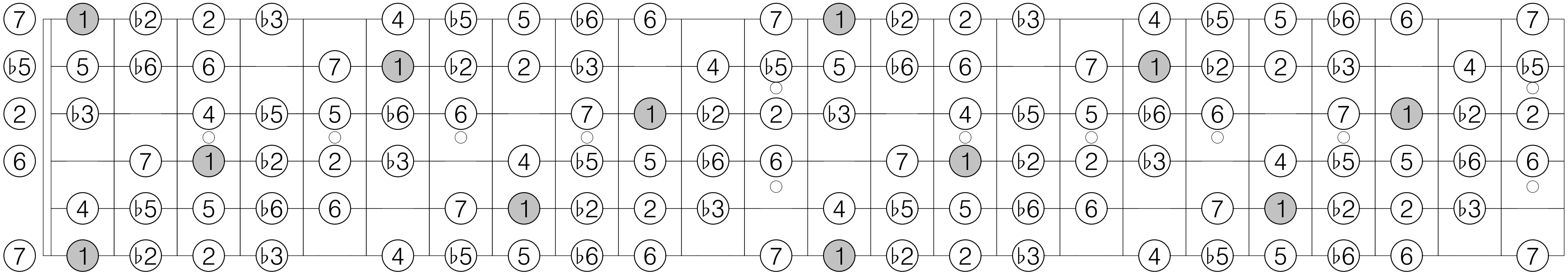

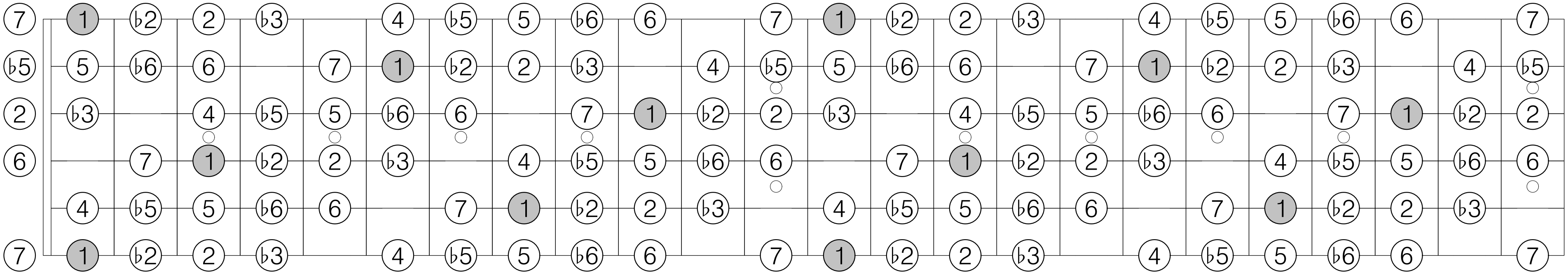

F transposition 2 of Mode 7 [1, 1, 1, 2, 1]

1 ♭2 2 3 4 ♭5 5 ♭6 ♭7 7 1 ♭2 2 3 4 ♭5 5 ♭6 ♭7 7

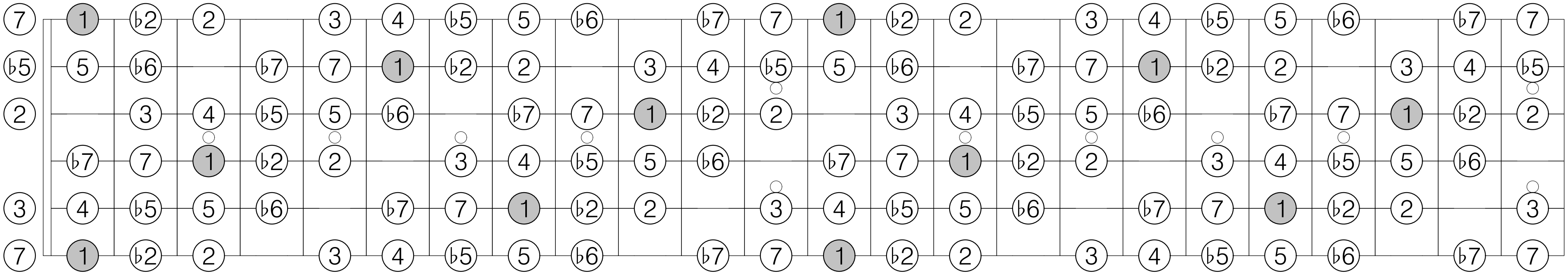

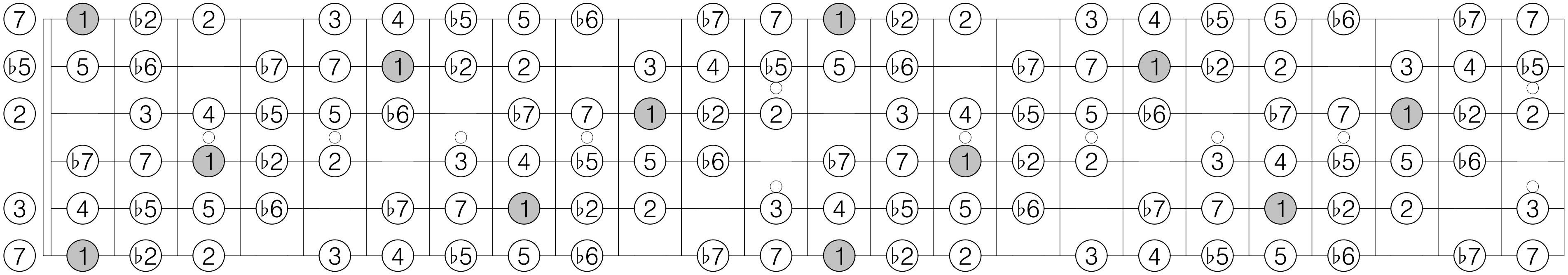

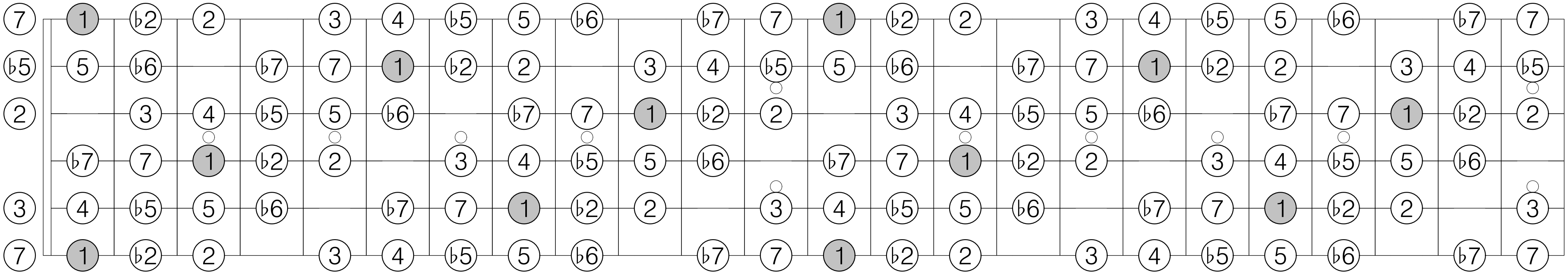

F transposition 3 of Mode 7 [1, 1, 1, 2, 1]

1 ♭2 ♭3 3 4 ♭5 5 6 ♭7 7 1 ♭2 ♭3 3 4 ♭5 5 6 ♭7 7

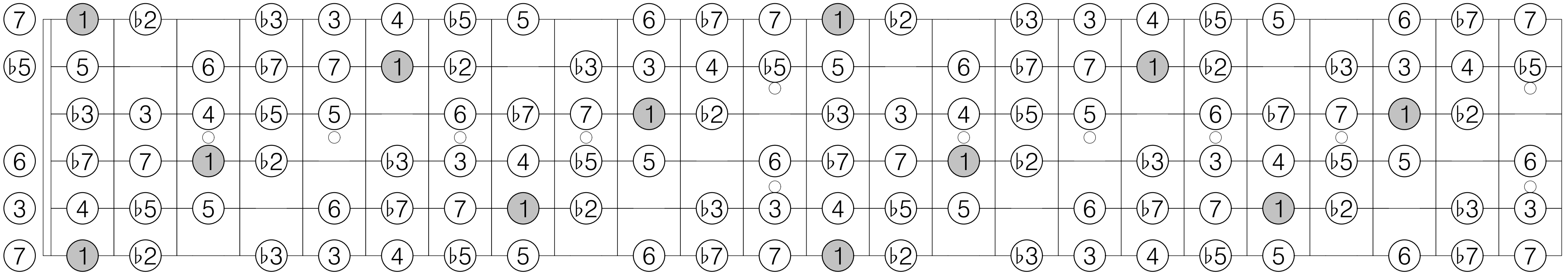

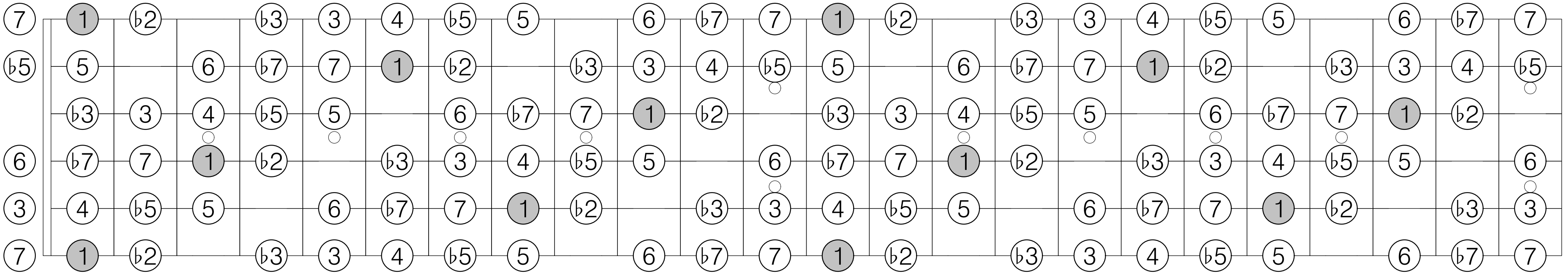

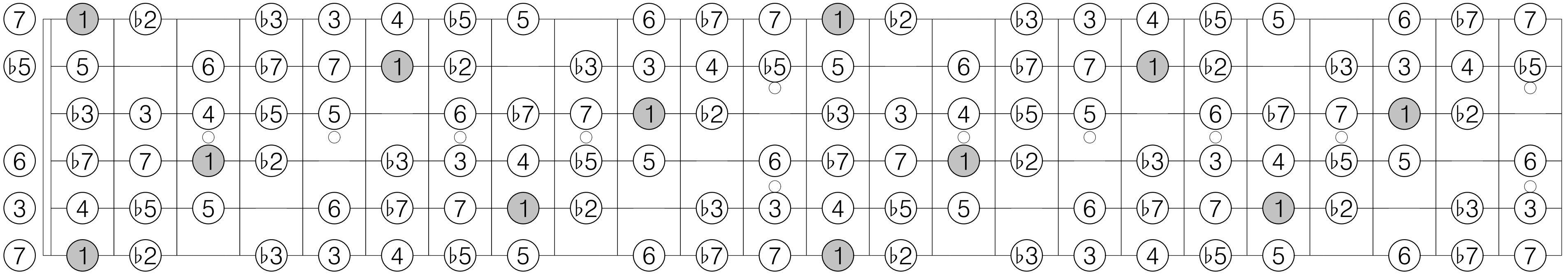

F transposition 4 of Mode 7 [1, 1, 1, 2, 1]

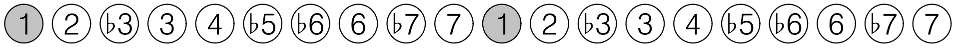

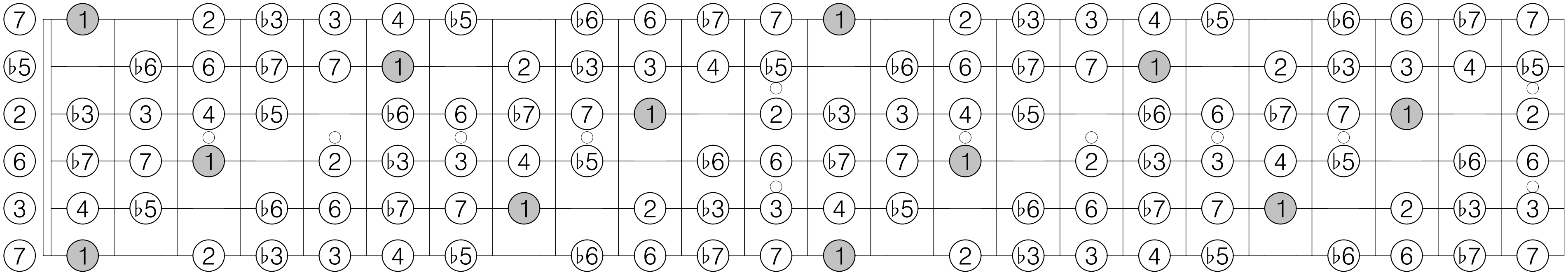

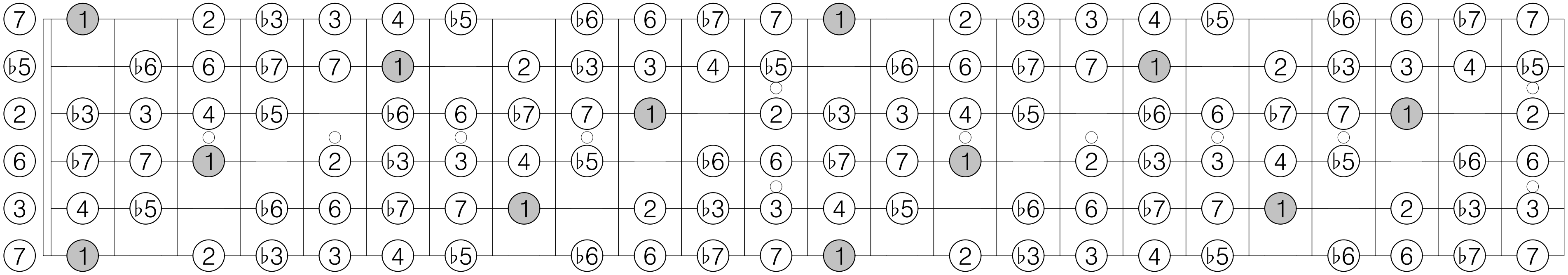

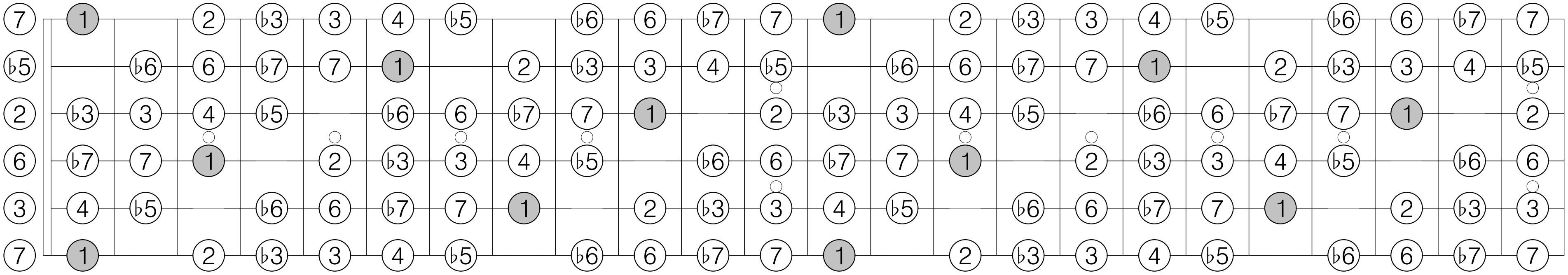

F transposition 5 of Mode 7 [1, 1, 1, 2, 1]

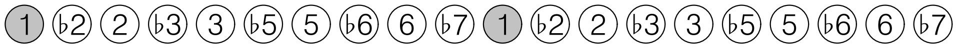

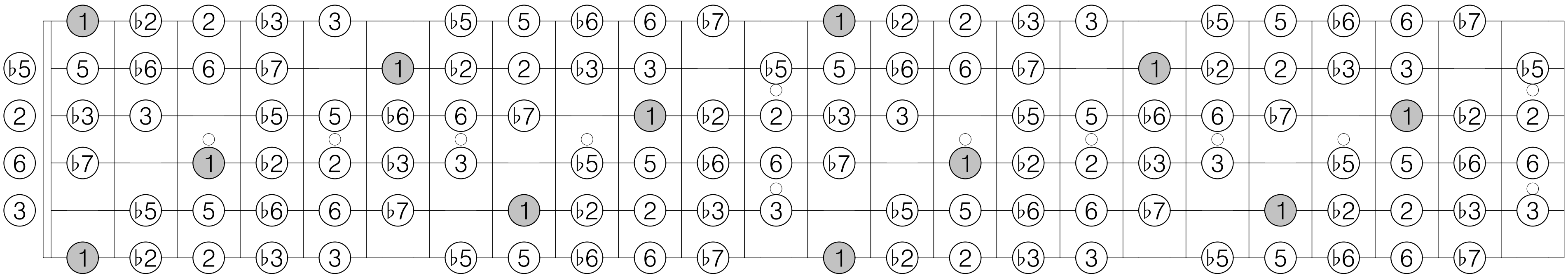

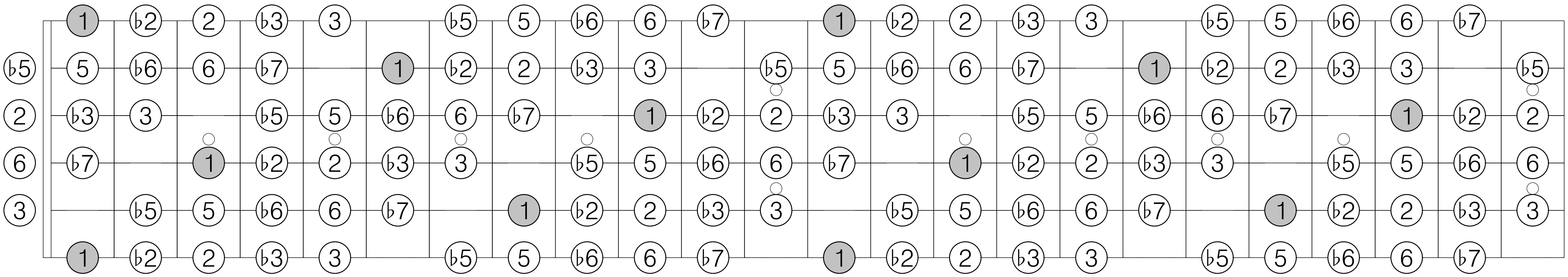

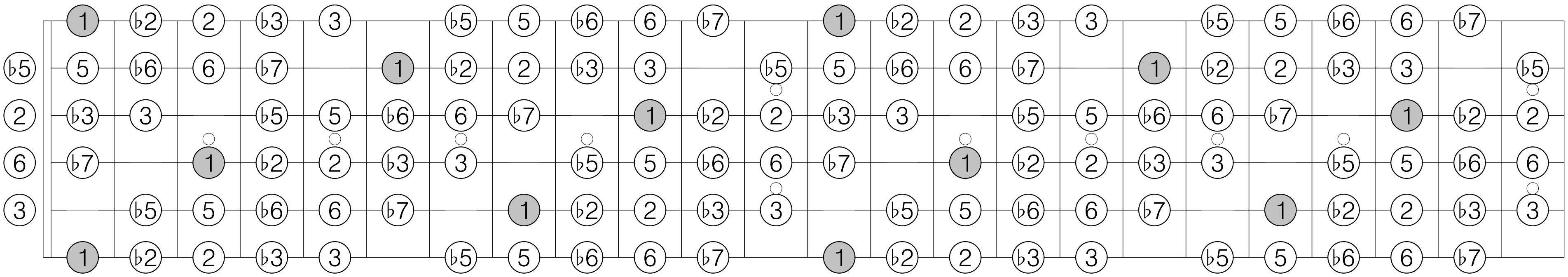

F# transposition 1 of Mode 1 [2]

1 2 3 ♭5 ♭6 ♭7 1 2 3 ♭5 ♭6 ♭7

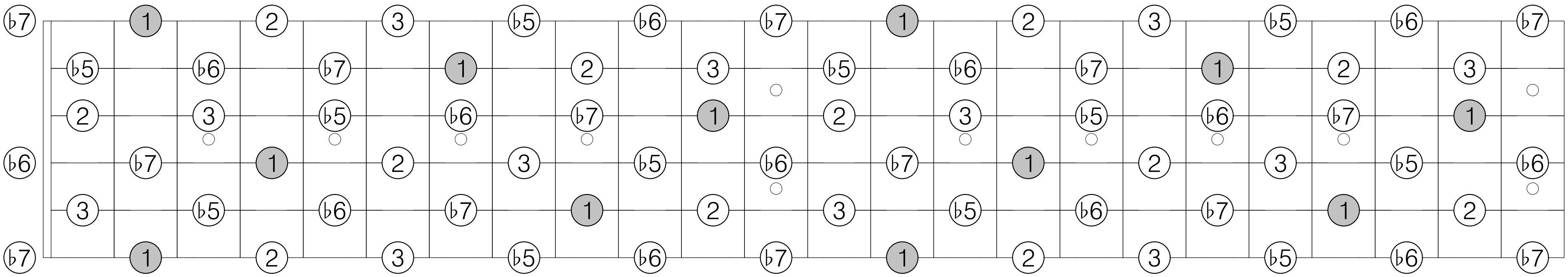

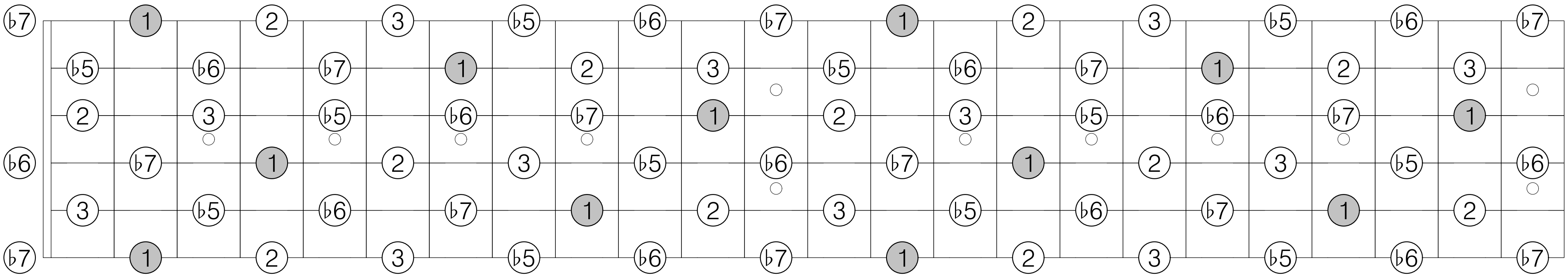

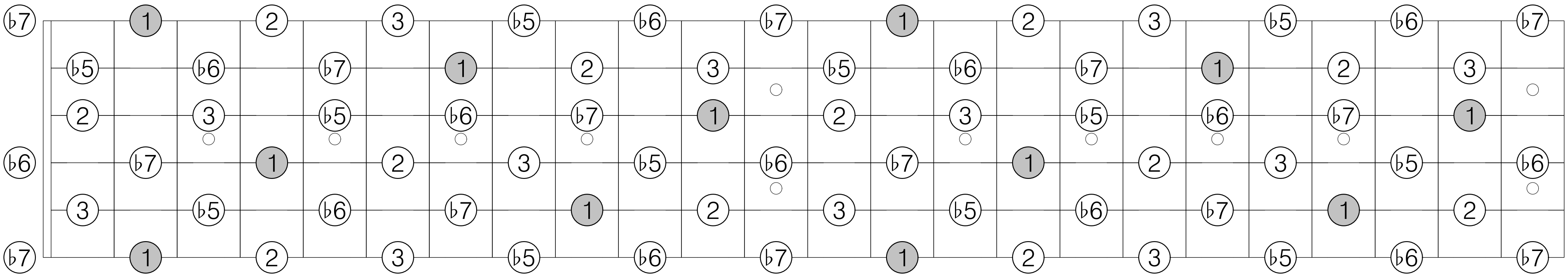

F# transposition 1 of Mode 2 [1, 2]

1 ♭2 ♭3 3 ♭5 5 6 ♭7 1 ♭2 ♭3 3 ♭5 5 6 ♭7

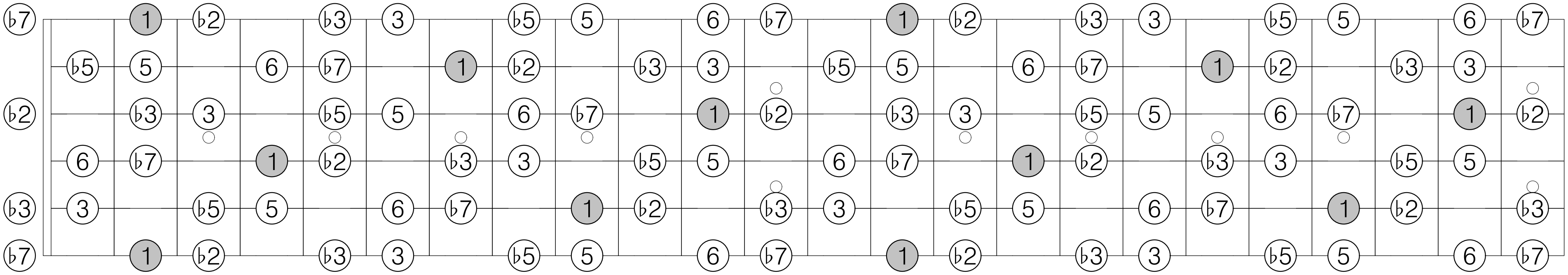

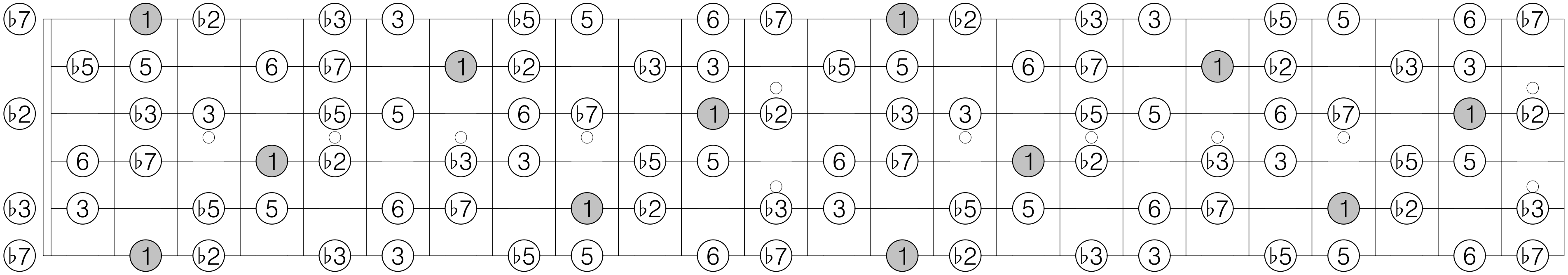

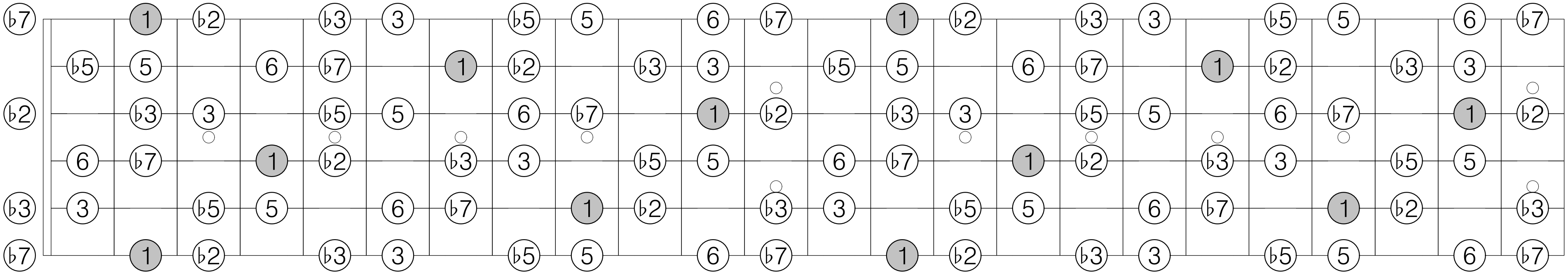

F# transposition 2 of Mode 2 [1, 2]

1 2 ♭3 4 ♭5 ♭6 6 7 1 2 ♭3 4 ♭5 ♭6 6 7

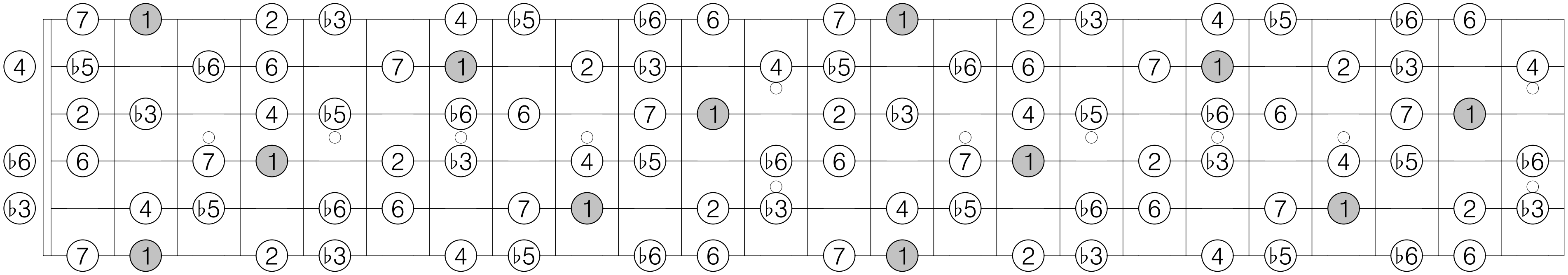

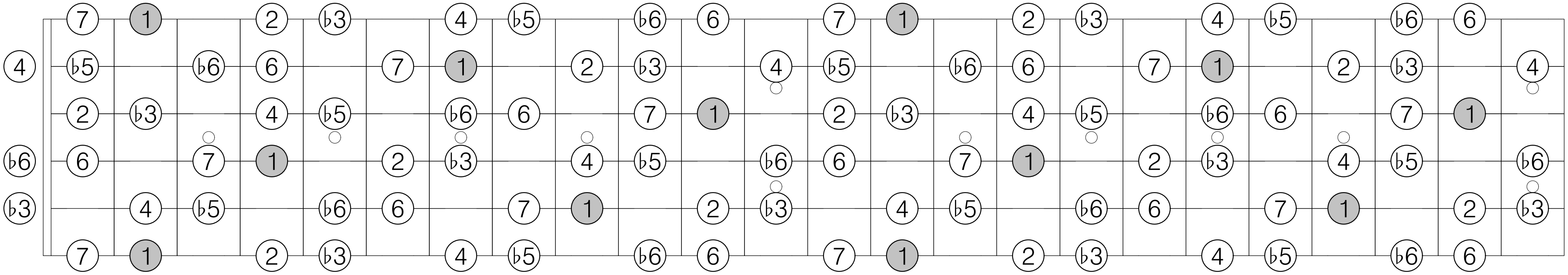

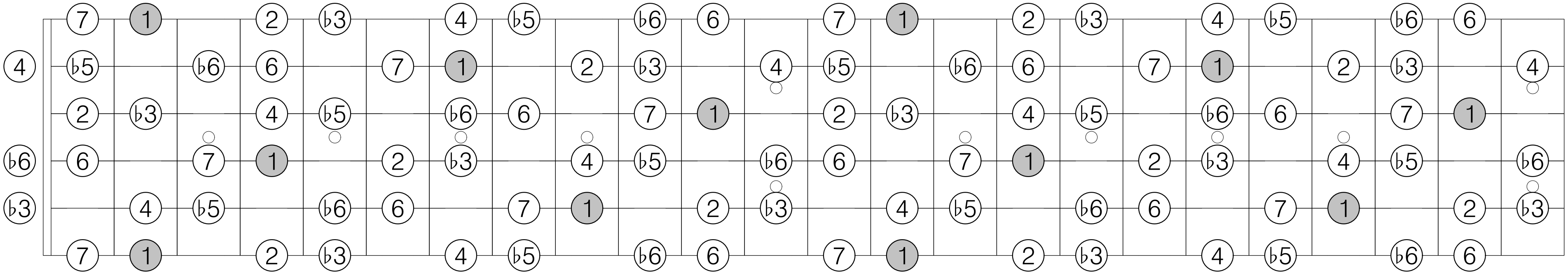

F# transposition 1 of Mode 3 [1, 1, 2]

1 ♭2 2 3 4 ♭5 ♭6 6 ♭7 1 ♭2 2 3 4 ♭5 ♭6 6 ♭7

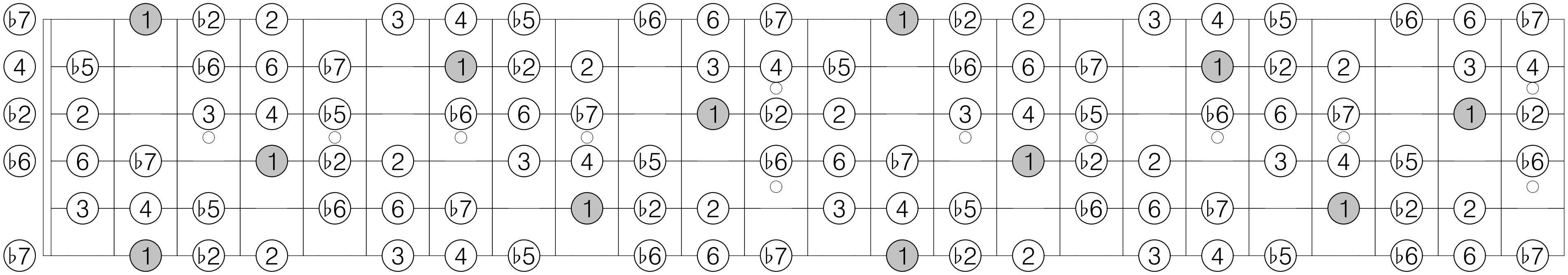

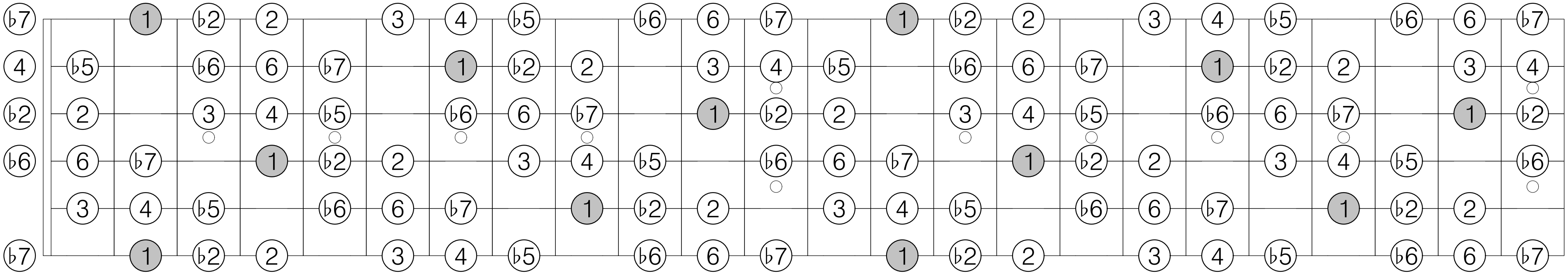

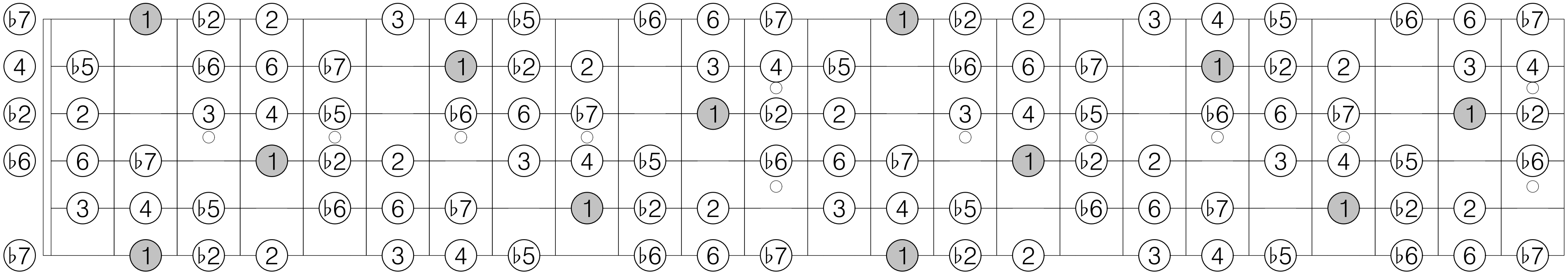

F# transposition 2 of Mode 3 [1, 1, 2]

1 ♭2 ♭3 3 4 5 ♭6 6 7 1 ♭2 ♭3 3 4 5 ♭6 6 7

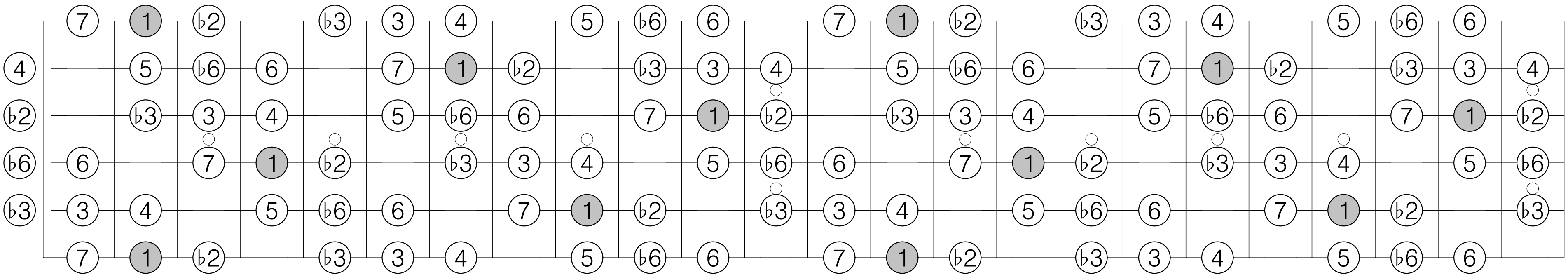

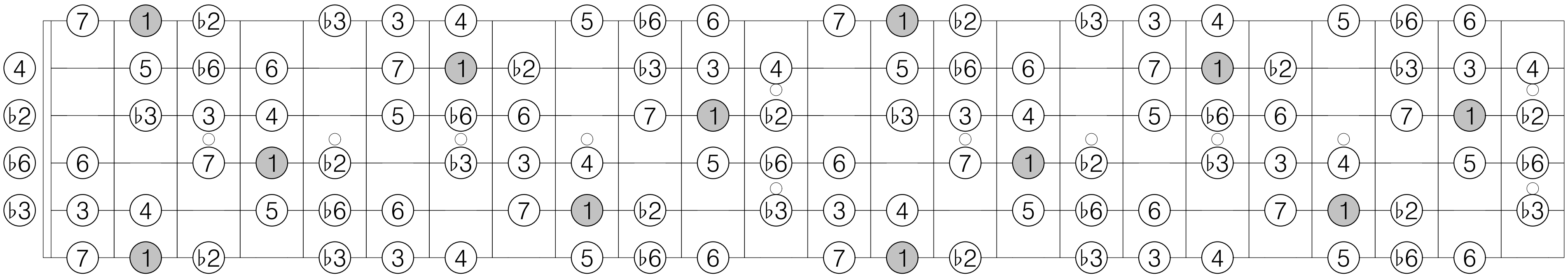

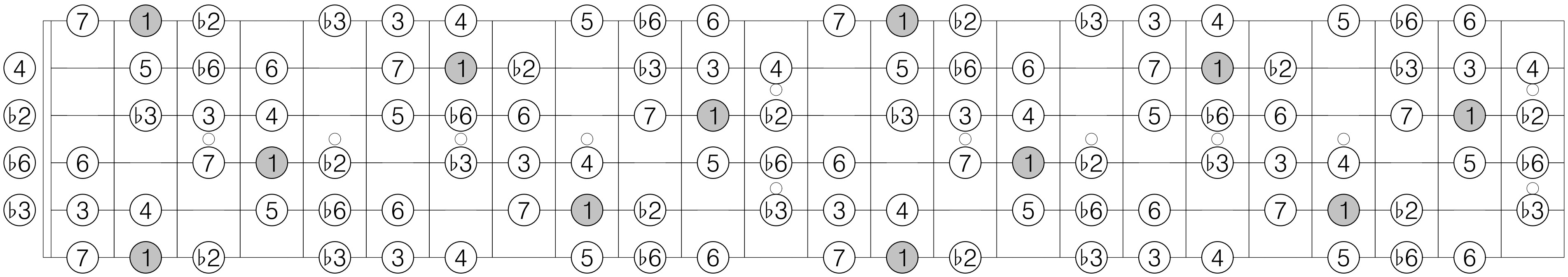

F# transposition 3 of Mode 3 [1, 1, 2]

1 2 ♭3 3 ♭5 5 ♭6 ♭7 7 1 2 ♭3 3 ♭5 5 ♭6 ♭7 7

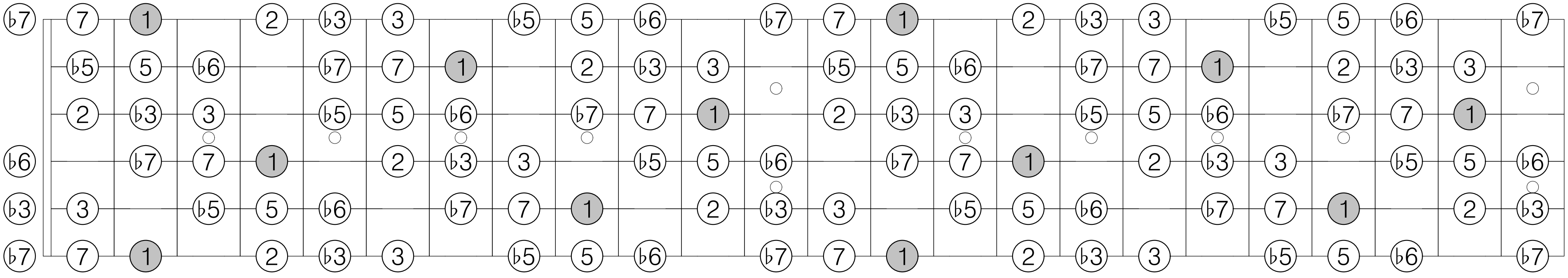

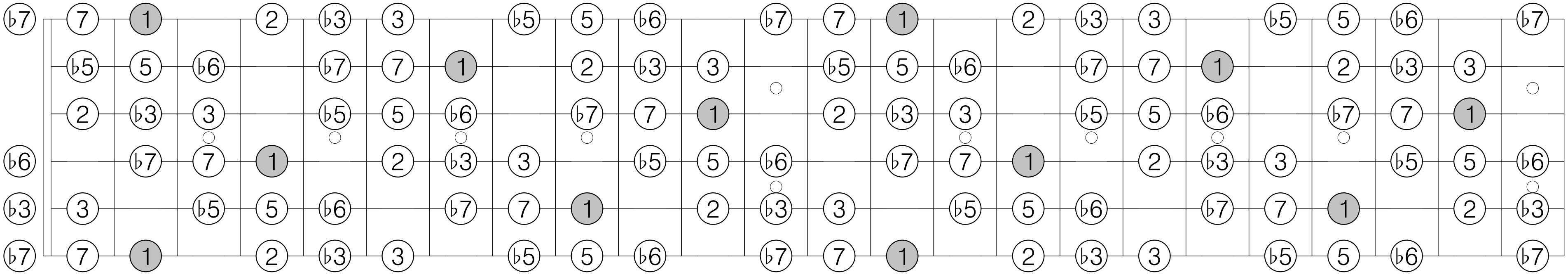

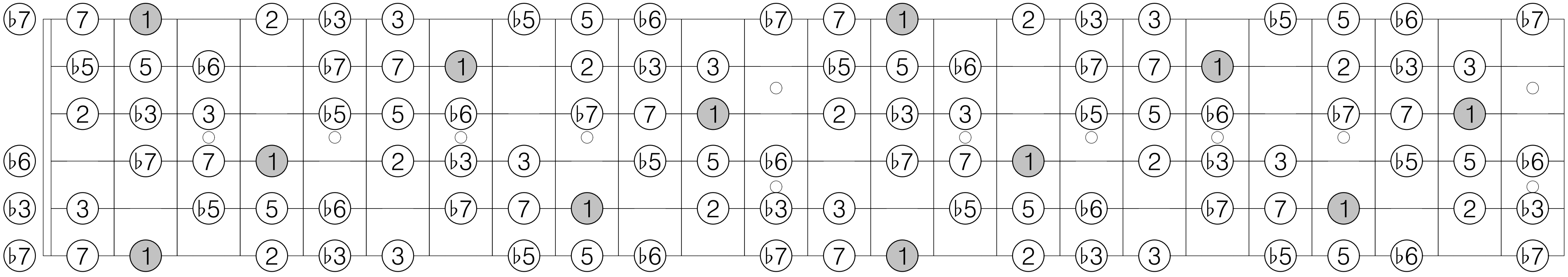

F# transposition 1 of Mode 4 [1, 1, 3, 1]

1 ♭2 2 4 ♭5 5 ♭6 7 1 ♭2 2 4 ♭5 5 ♭6 7

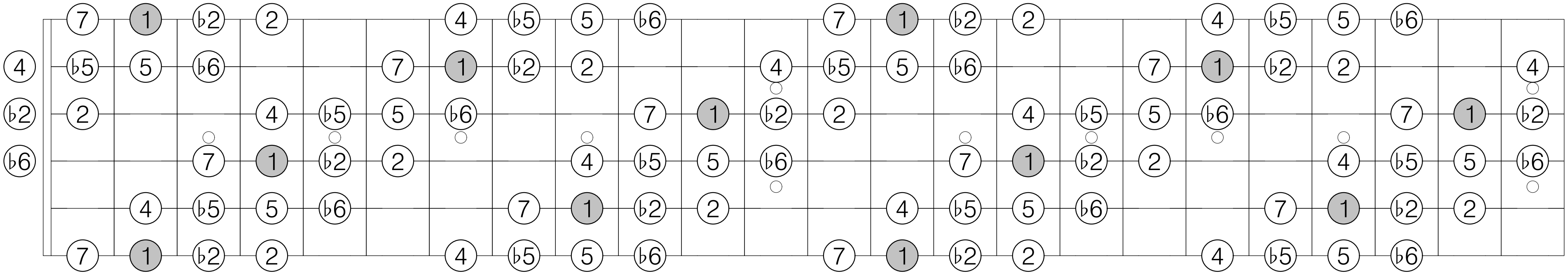

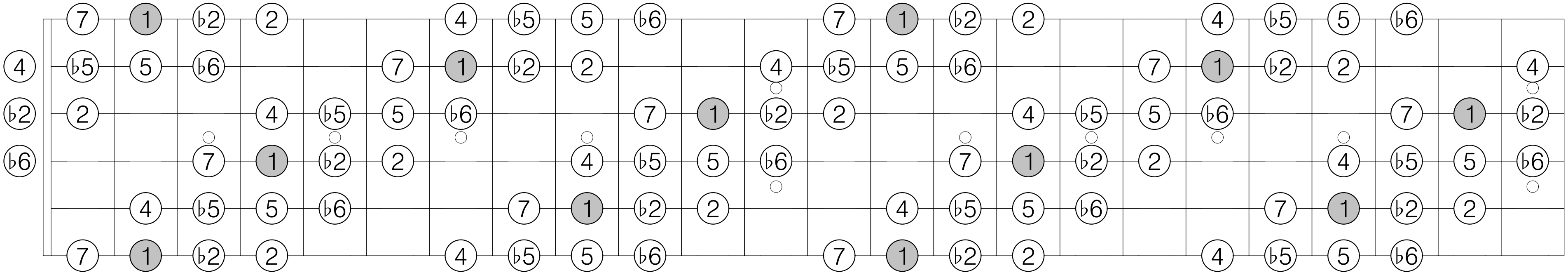

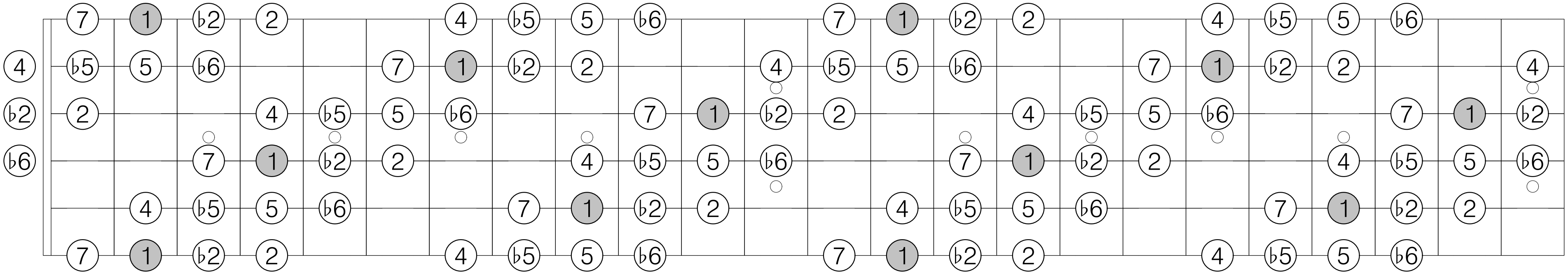

F# transposition 2 of Mode 4 [1, 1, 3, 1]

1 ♭2 3 4 ♭5 5 ♭7 7 1 ♭2 3 4 ♭5 5 ♭7 7

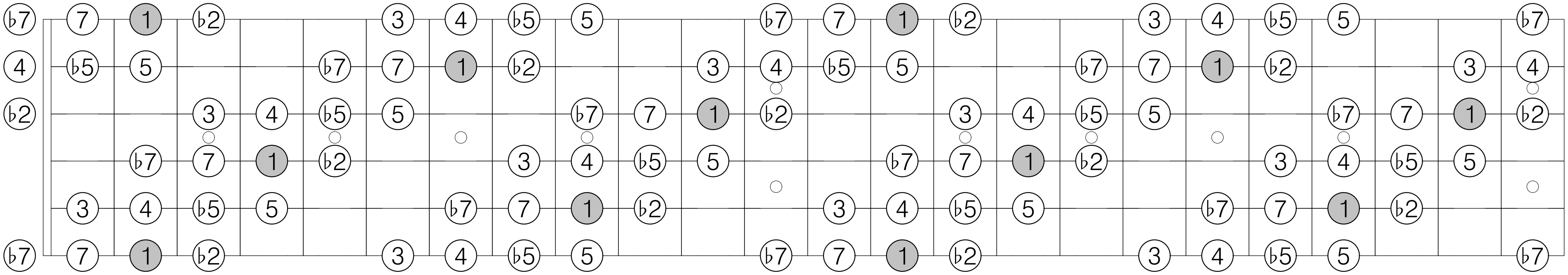

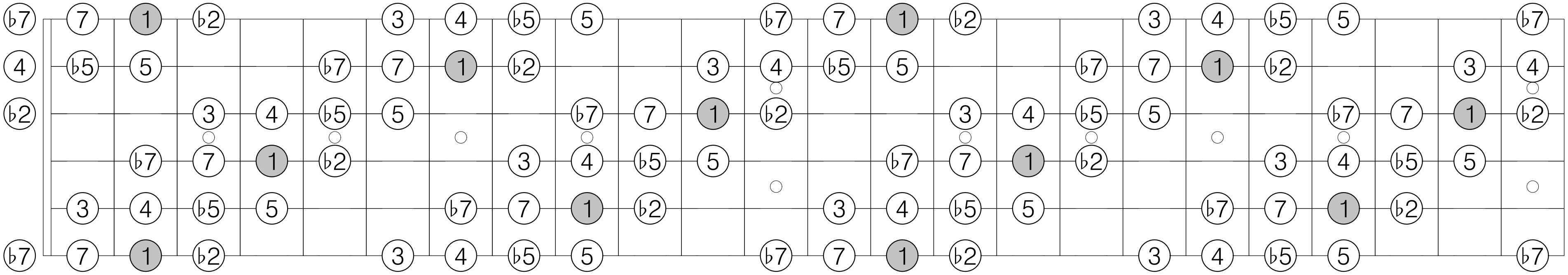

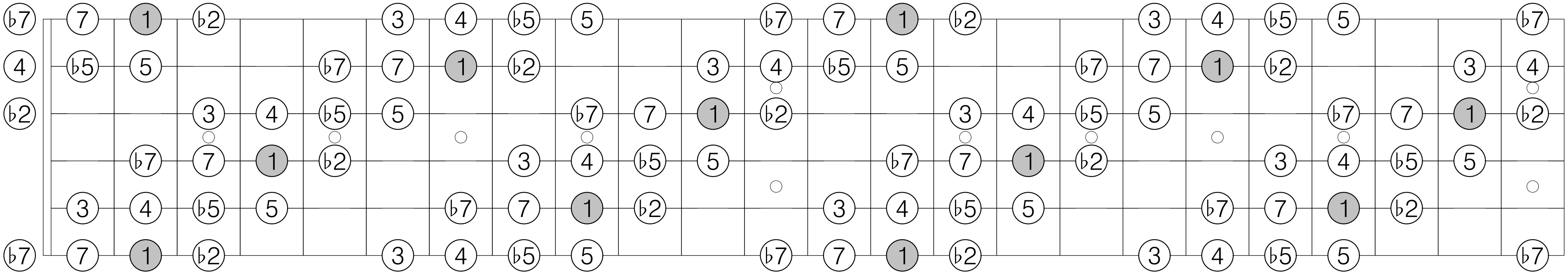

F# transposition 3 of Mode 4 [1, 1, 3, 1]

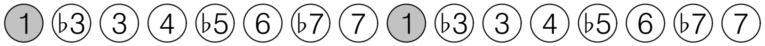

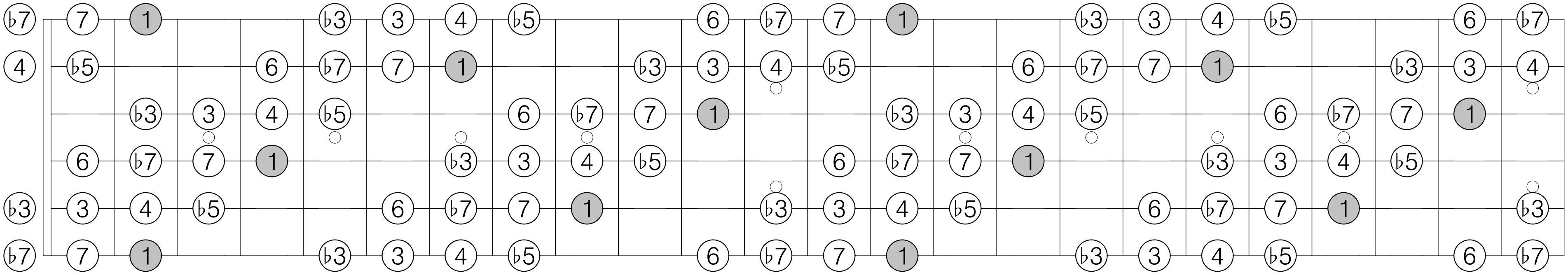

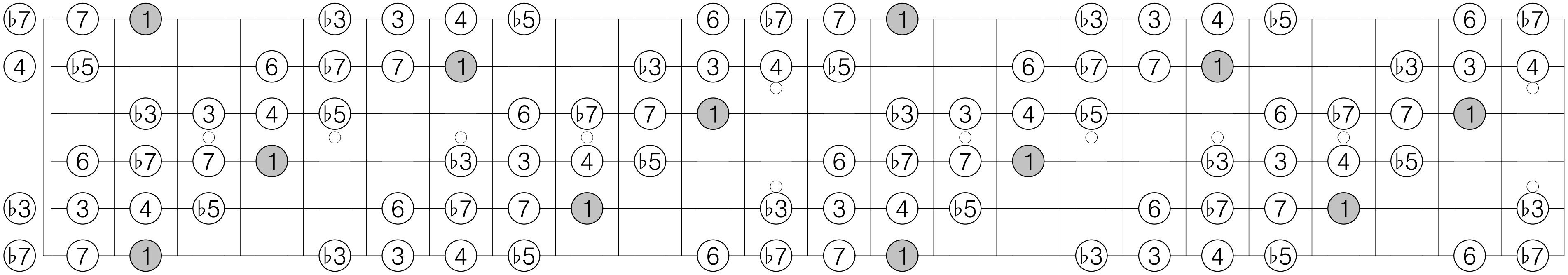

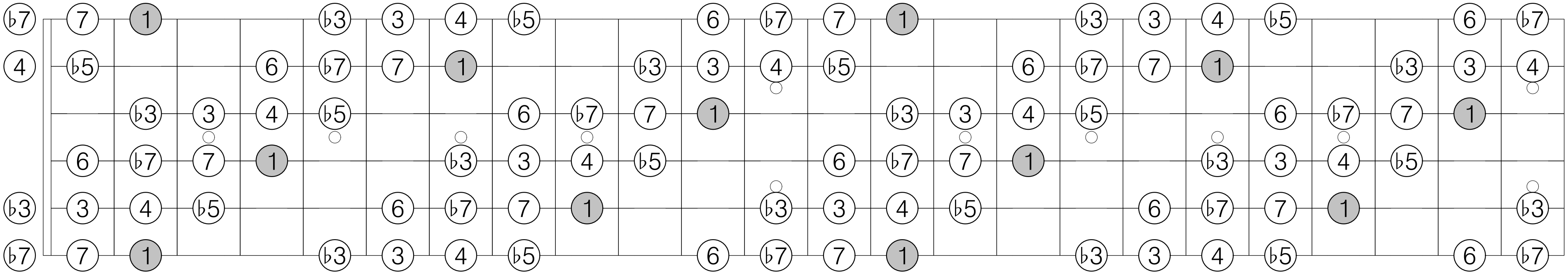

F# transposition 4 of Mode 4 [1, 1, 3, 1]

1 ♭2 2 ♭3 ♭5 5 ♭6 6 1 ♭2 2 ♭3 ♭5 5 ♭6 6

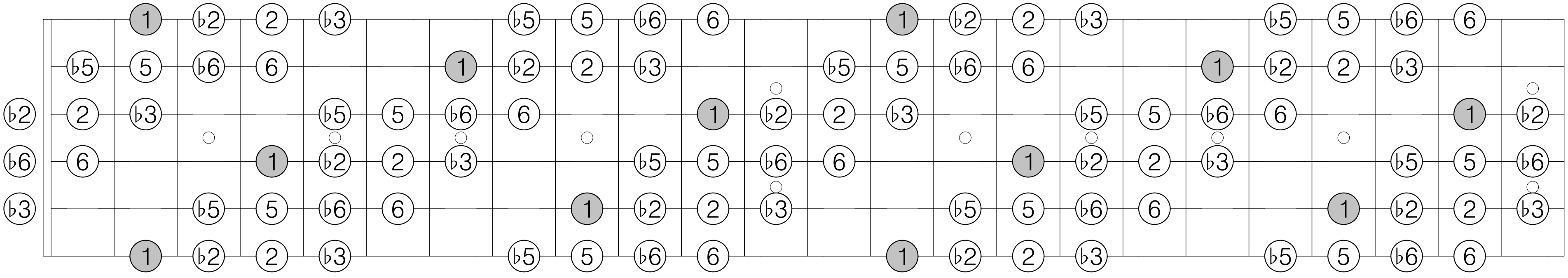

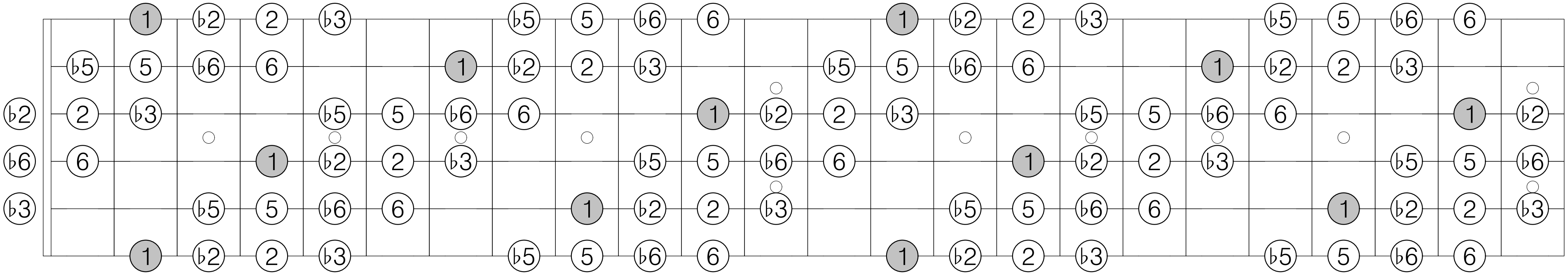

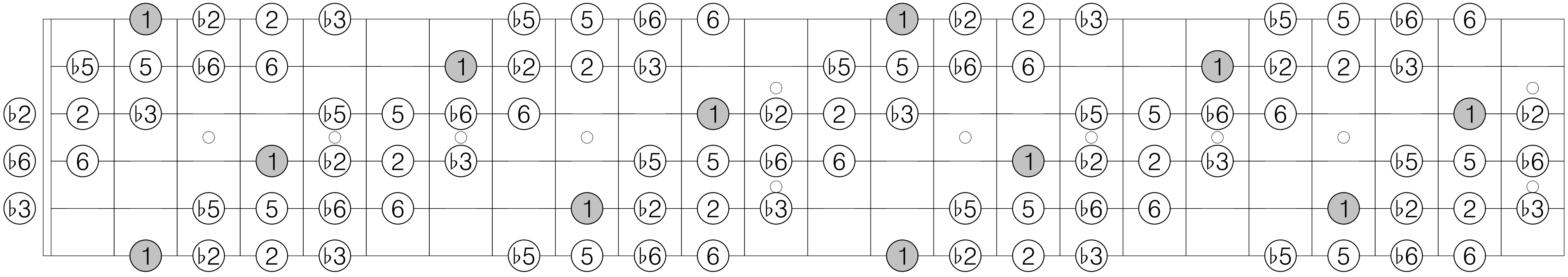

F# transposition 1 of Mode 5 [1, 4, 1]

1 ♭2 4 ♭5 5 7 1 ♭2 4 ♭5 5 7

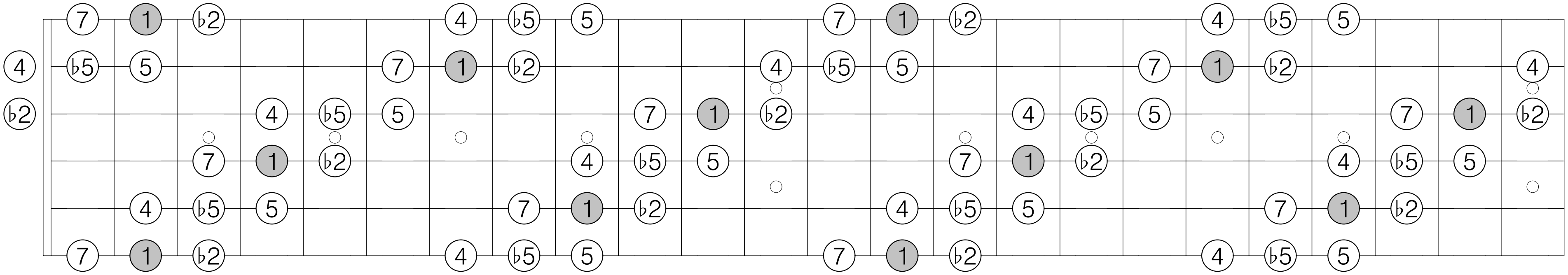

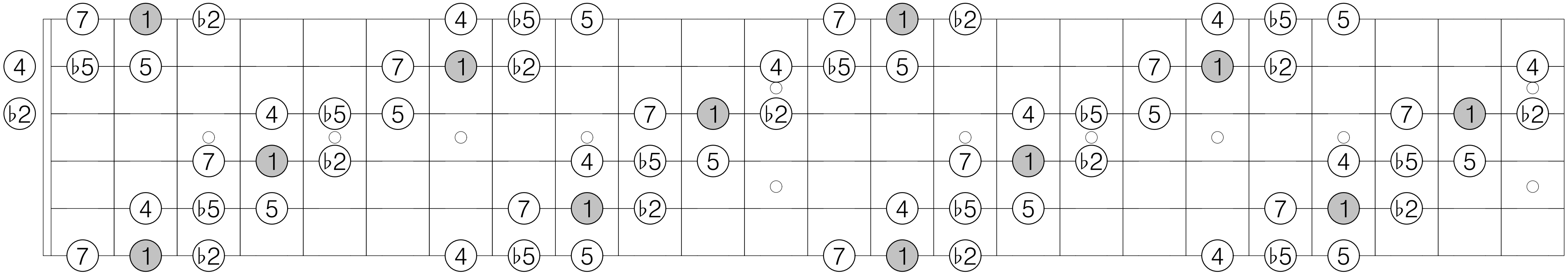

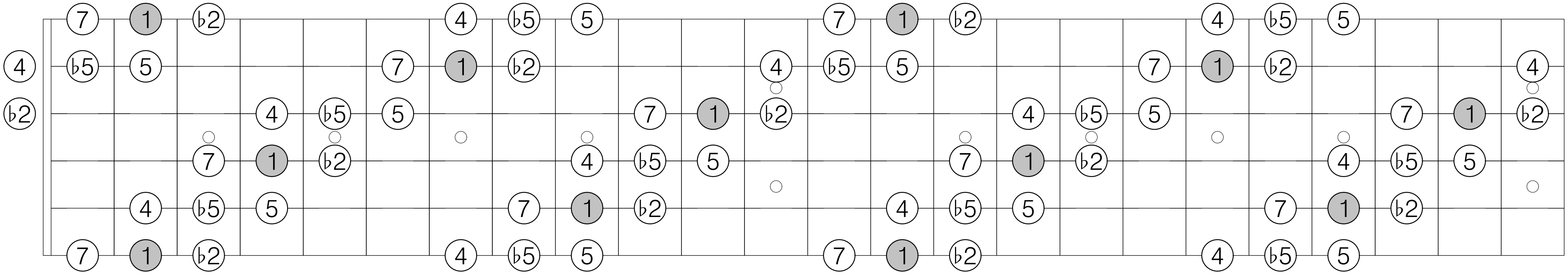

F# transposition 2 of Mode 5 [1, 4, 1]

1 3 4 ♭5 ♭7 7 1 3 4 ♭5 ♭7 7

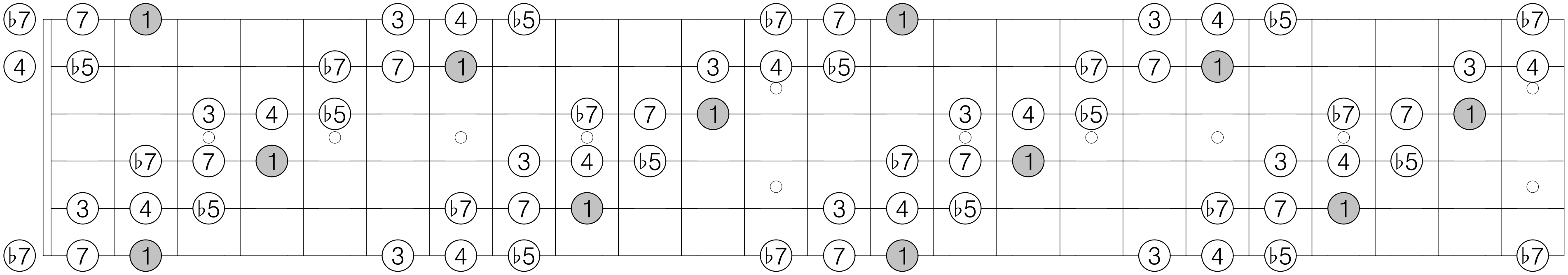

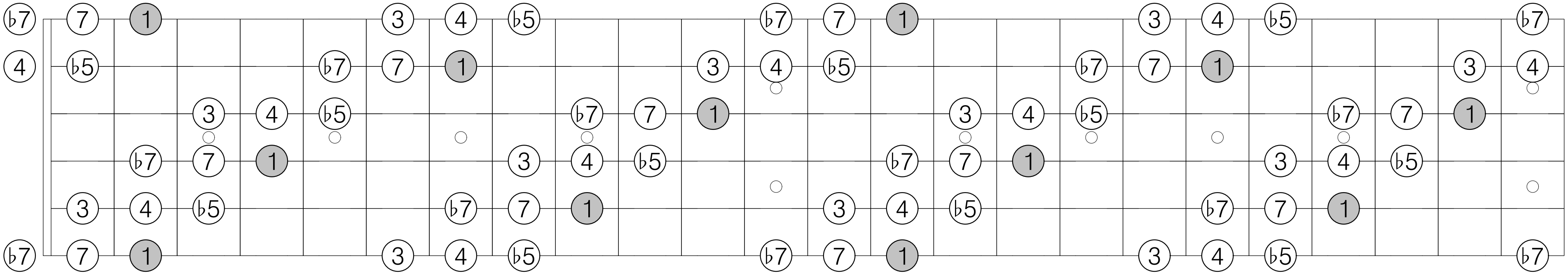

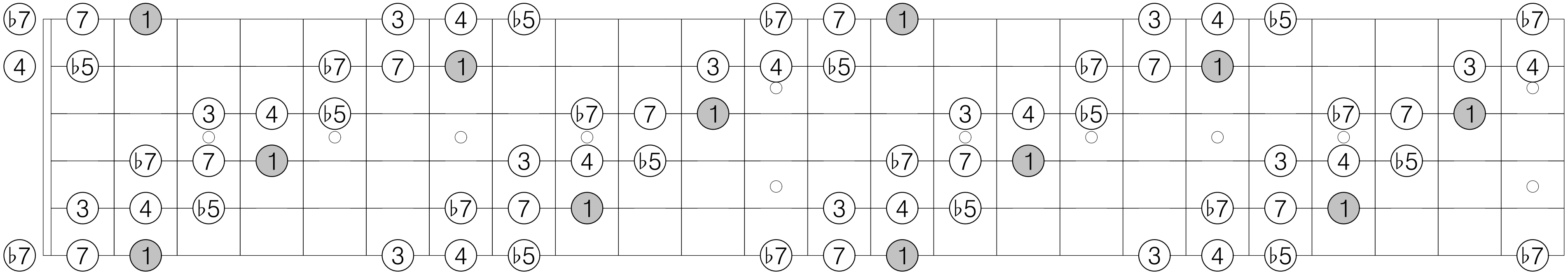

F# transposition 3 of Mode 5 [1, 4, 1]

1 ♭2 2 ♭5 5 ♭6 1 ♭2 2 ♭5 5 ♭6

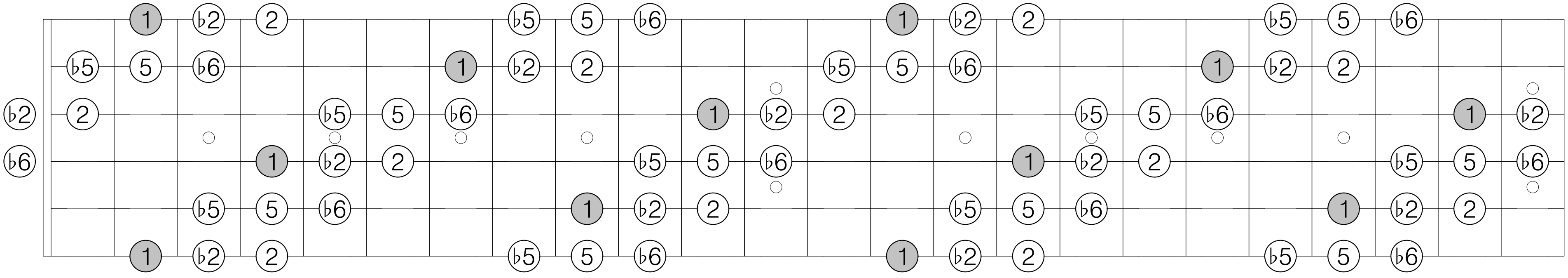

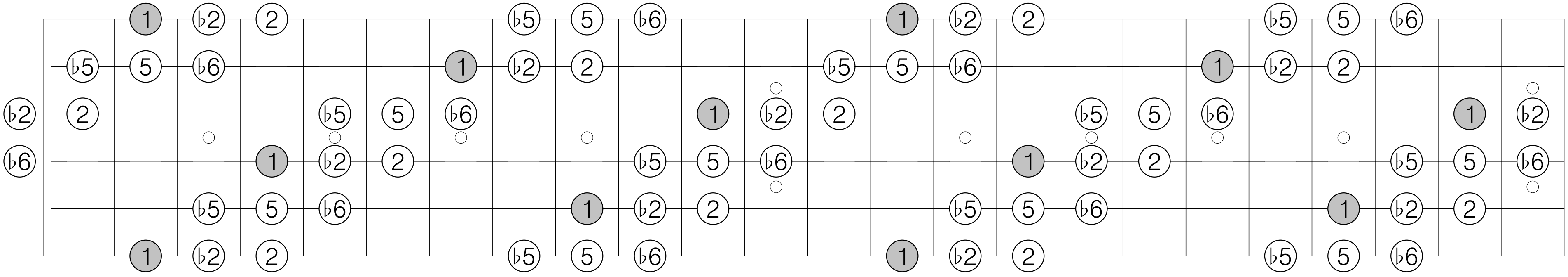

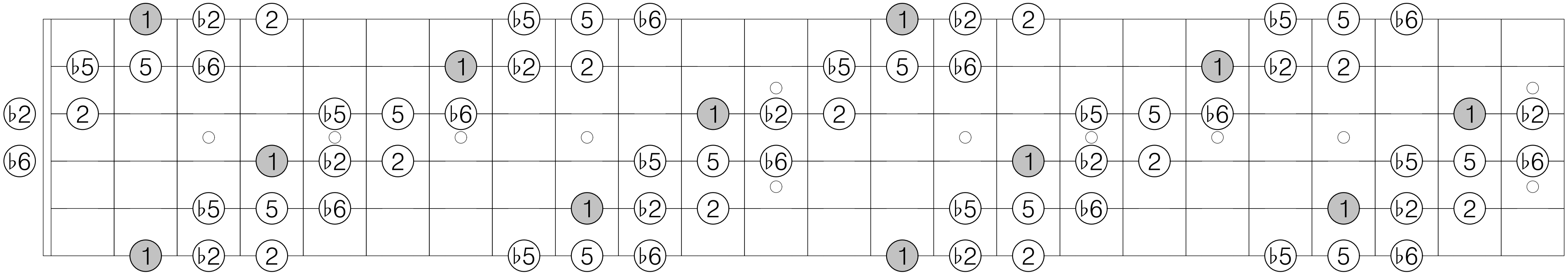

F# transposition 1 of Mode 6 [1, 1, 2, 2]

1 ♭2 2 3 ♭5 5 ♭6 ♭7 1 ♭2 2 3 ♭5 5 ♭6 ♭7

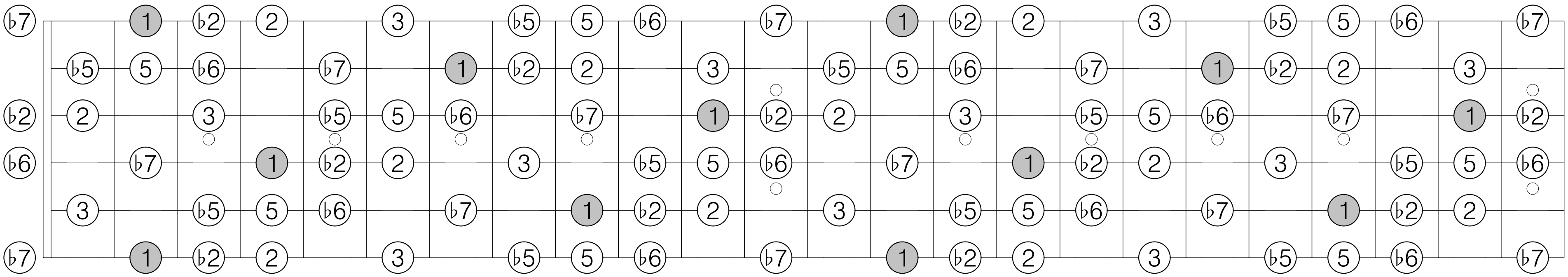

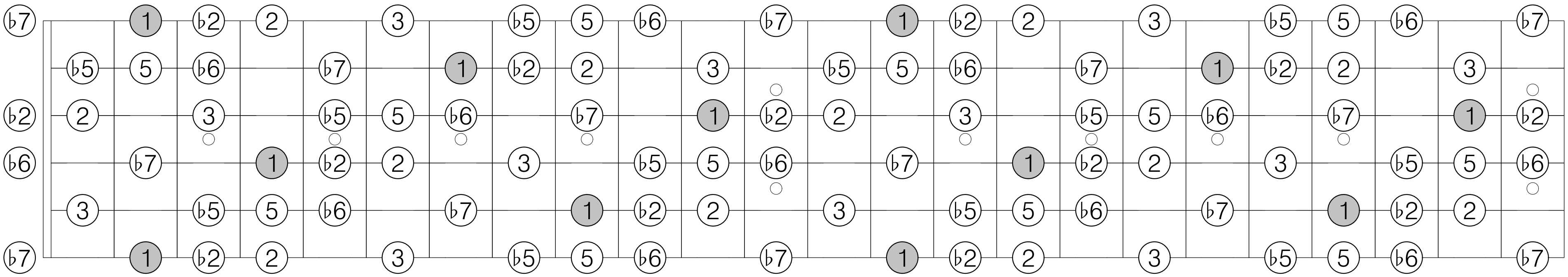

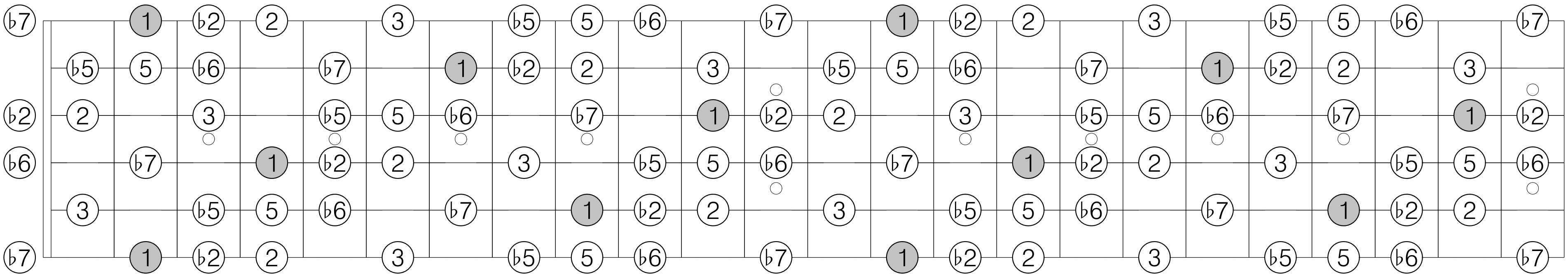

F# transposition 2 of Mode 6 [1, 1, 2, 2]

1 ♭2 ♭3 4 ♭5 5 6 7 1 ♭2 ♭3 4 ♭5 5 6 7

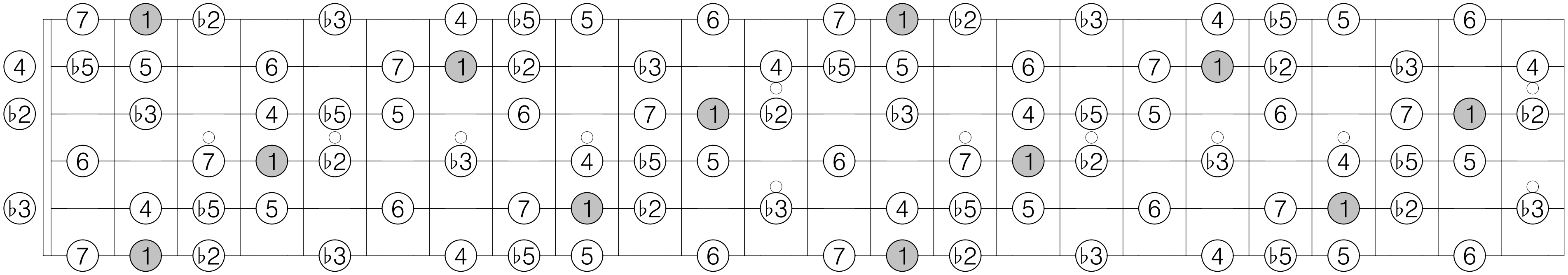

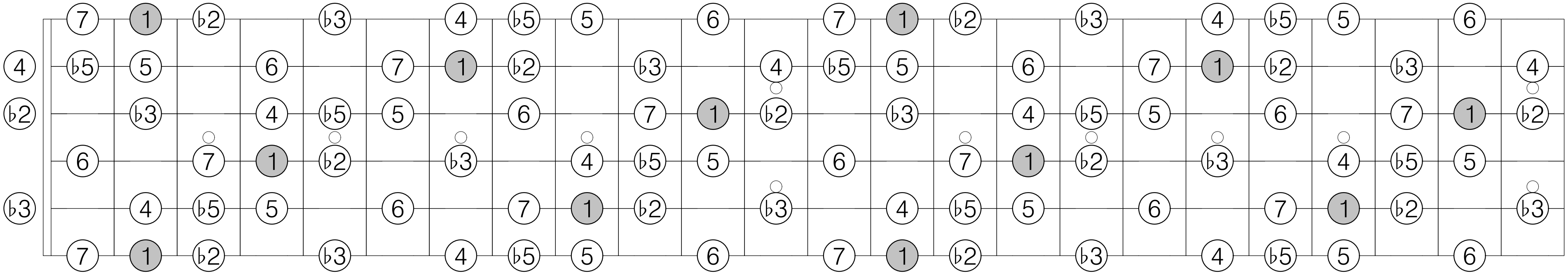

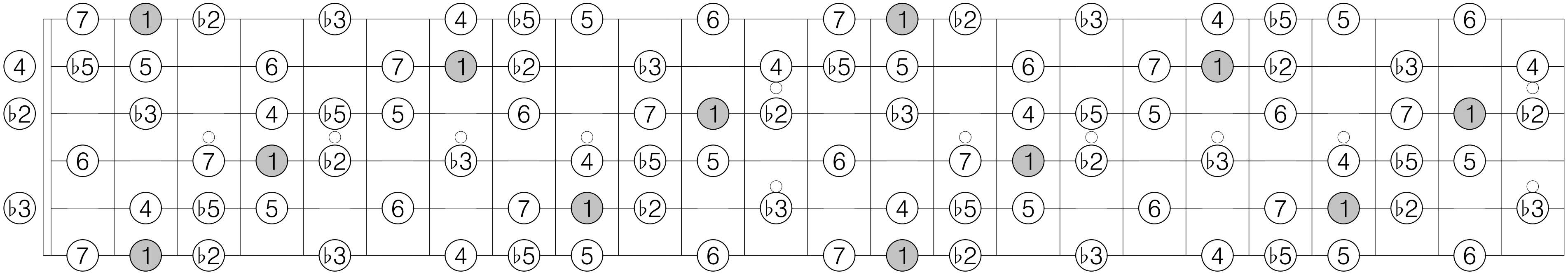

F# transposition 3 of Mode 6 [1, 1, 2, 2]

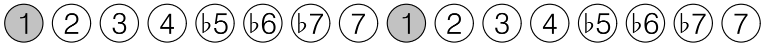

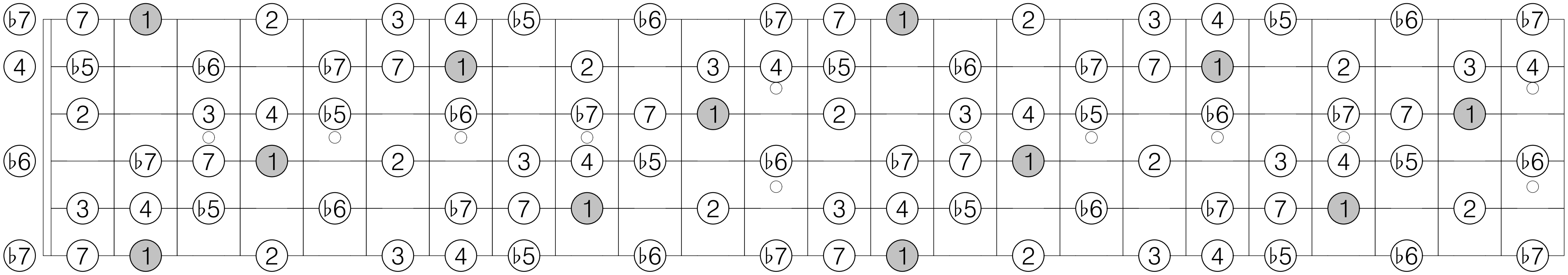

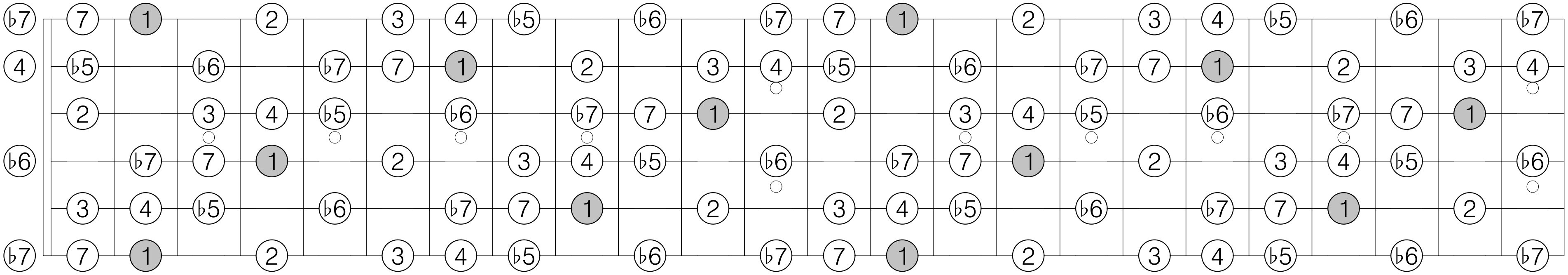

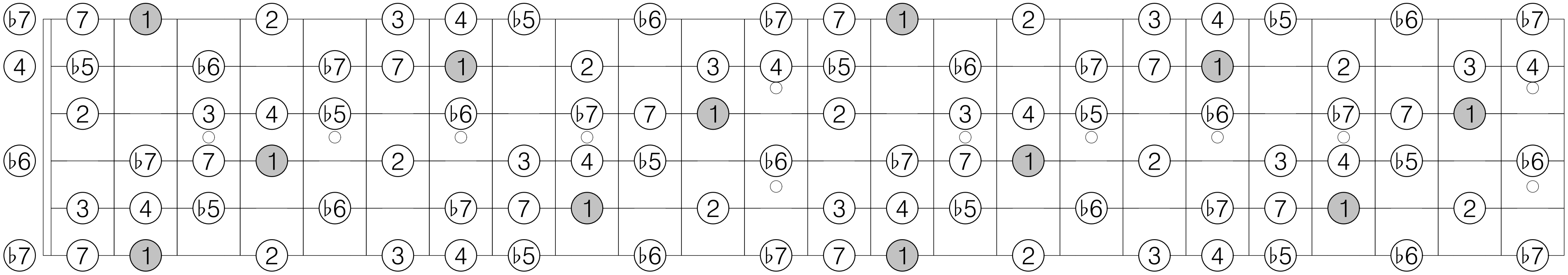

F# transposition 4 of Mode 6 [1, 1, 2, 2]

1 2 ♭3 3 ♭5 ♭6 6 ♭7 1 2 ♭3 3 ♭5 ♭6 6 ♭7

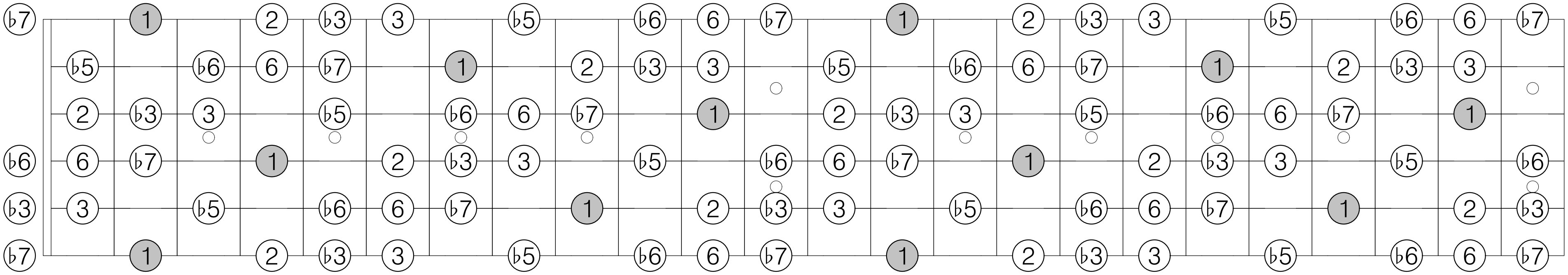

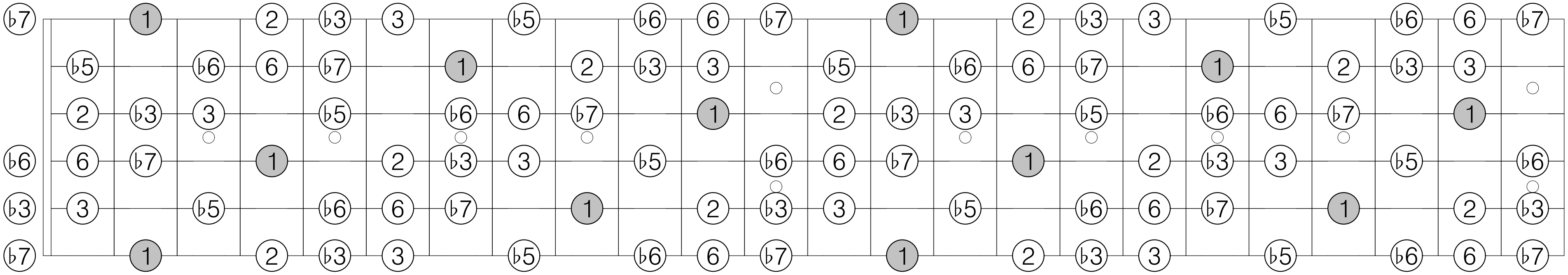

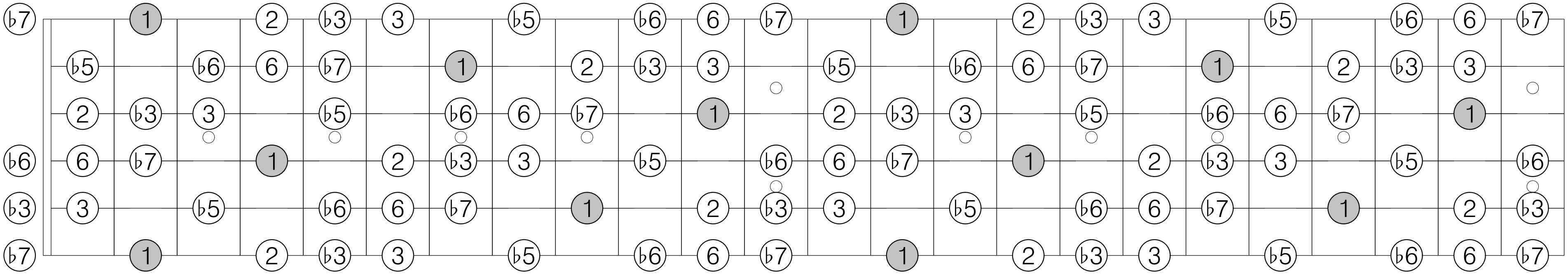

F# transposition 1 of Mode 7 [1, 1, 1, 2, 1]

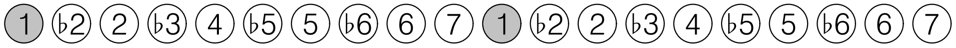

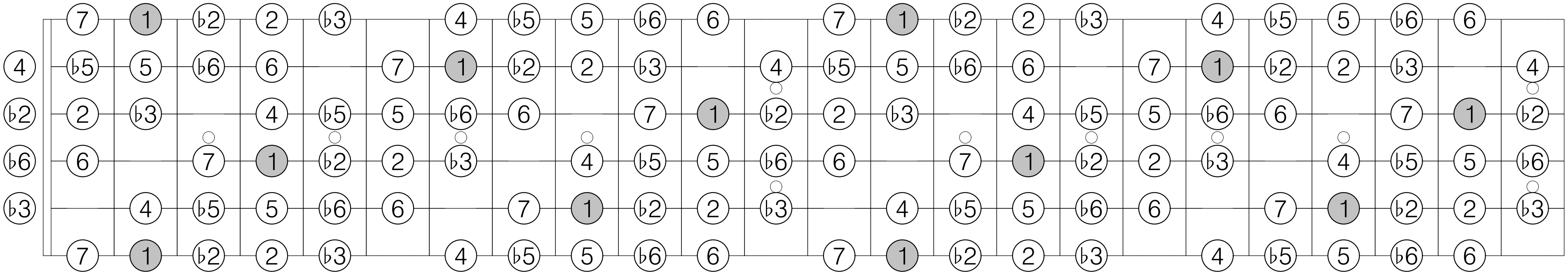

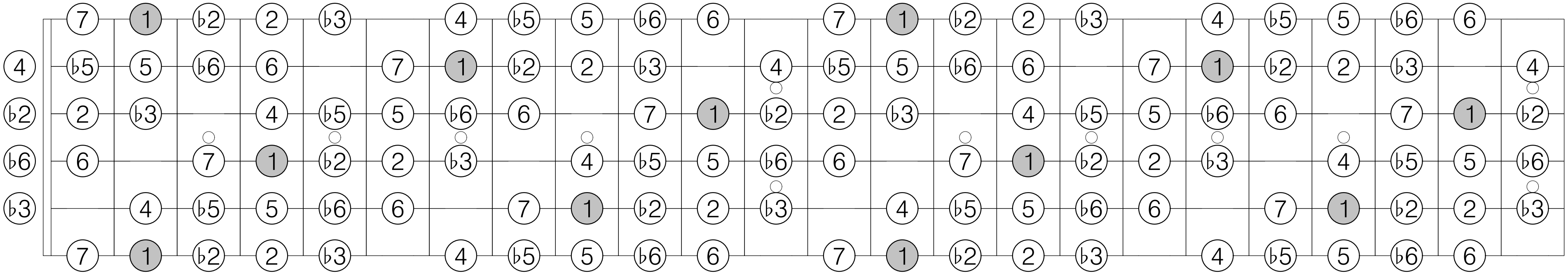

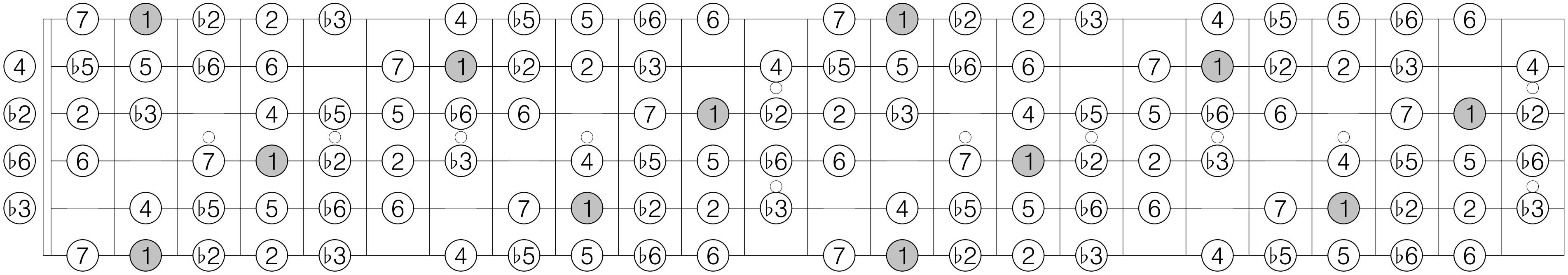

F# transposition 2 of Mode 7 [1, 1, 1, 2, 1]

1 ♭2 2 3 4 ♭5 5 ♭6 ♭7 7 1 ♭2 2 3 4 ♭5 5 ♭6 ♭7 7

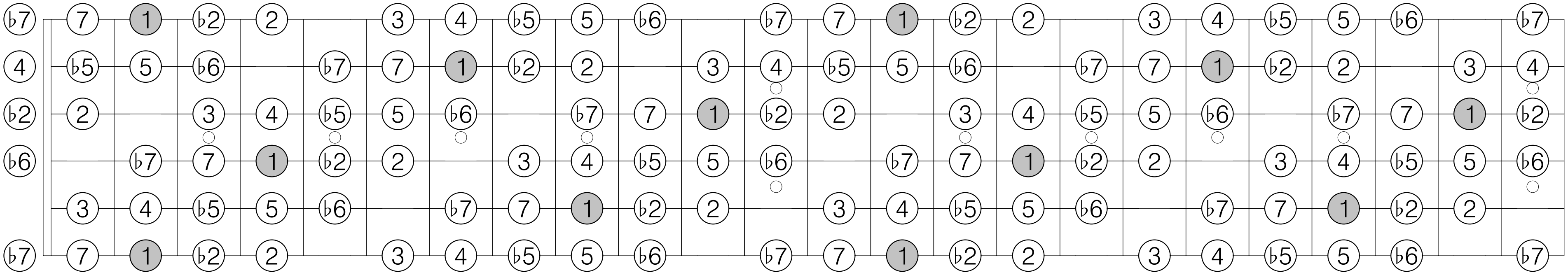

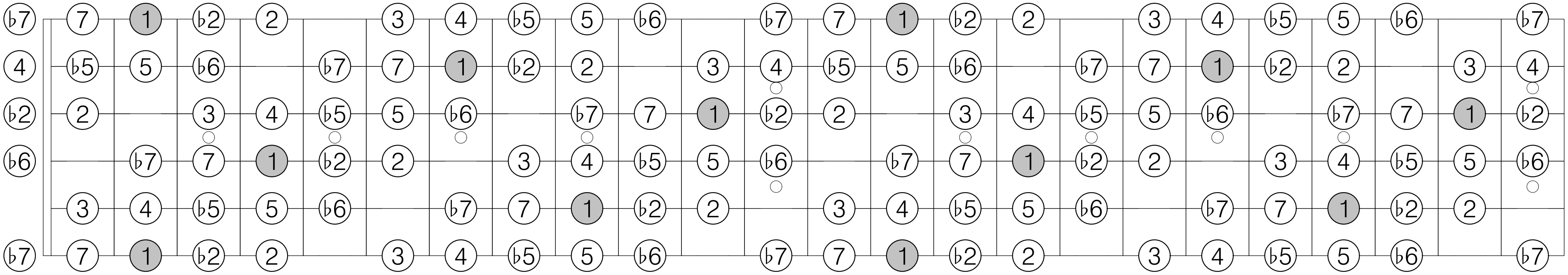

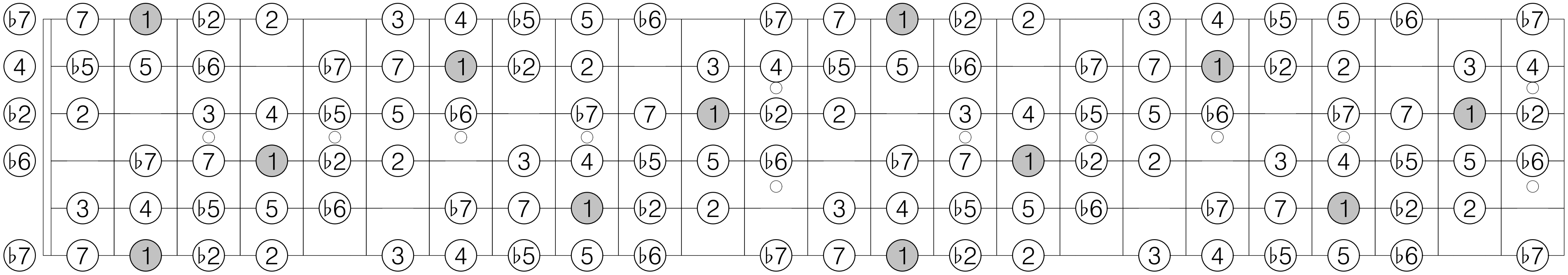

F# transposition 3 of Mode 7 [1, 1, 1, 2, 1]

1 ♭2 ♭3 3 4 ♭5 5 6 ♭7 7 1 ♭2 ♭3 3 4 ♭5 5 6 ♭7 7

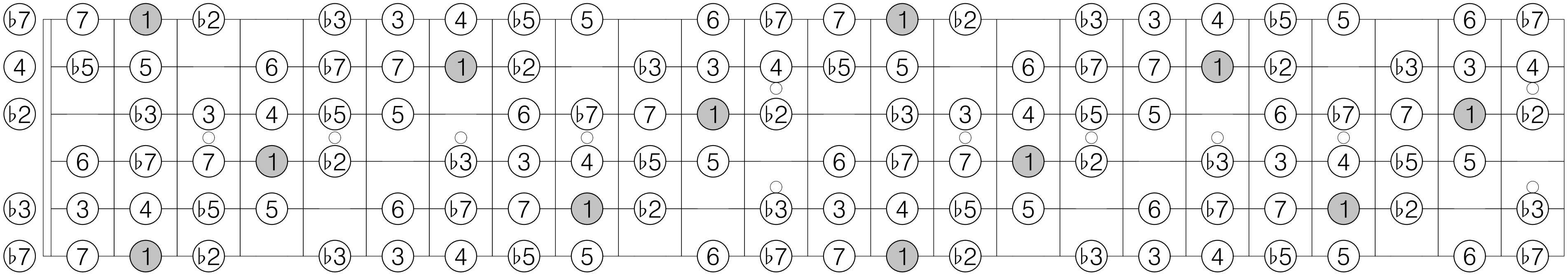

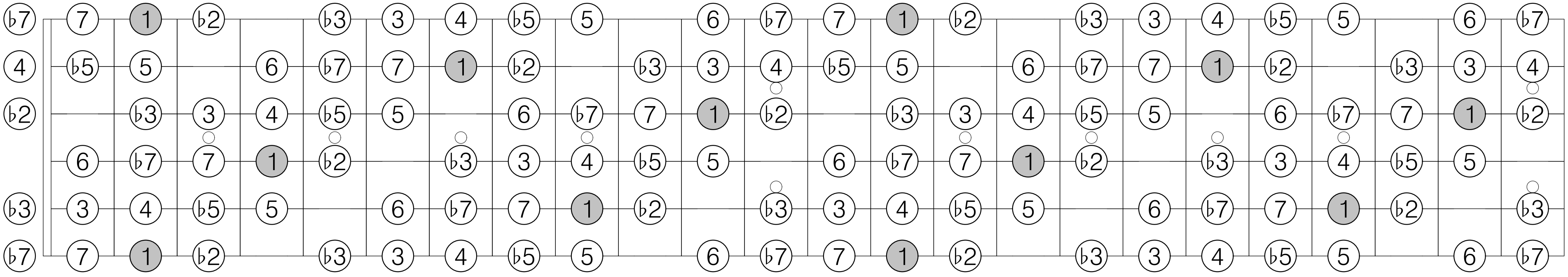

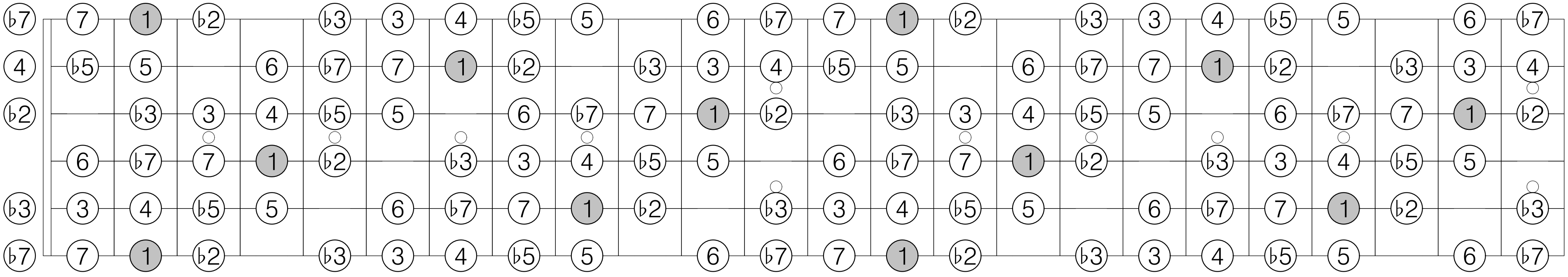

F# transposition 4 of Mode 7 [1, 1, 1, 2, 1]

1 2 ♭3 3 4 ♭5 ♭6 6 ♭7 7 1 2 ♭3 3 4 ♭5 ♭6 6 ♭7 7

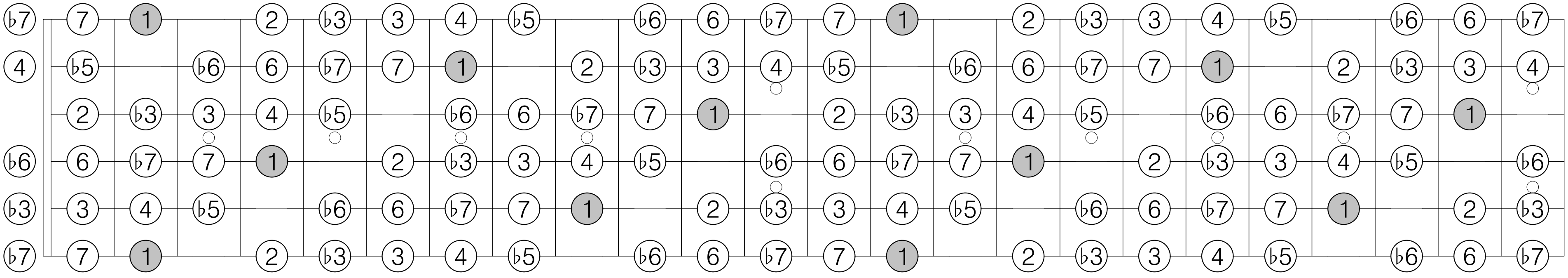

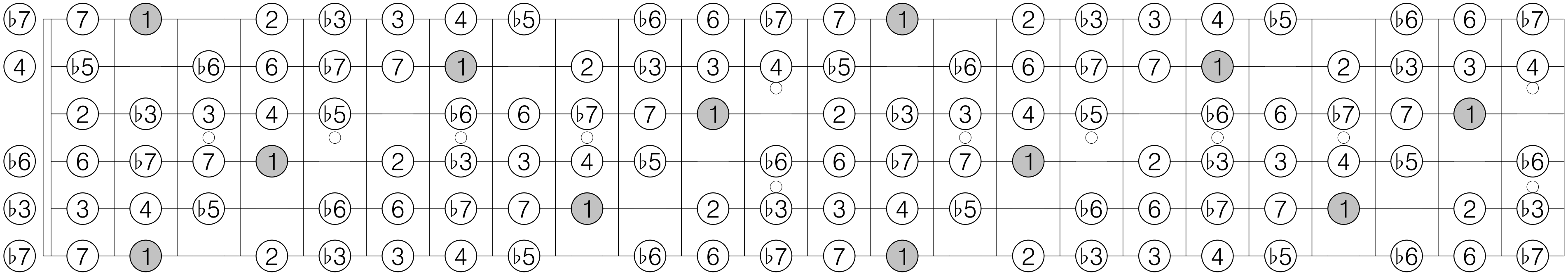

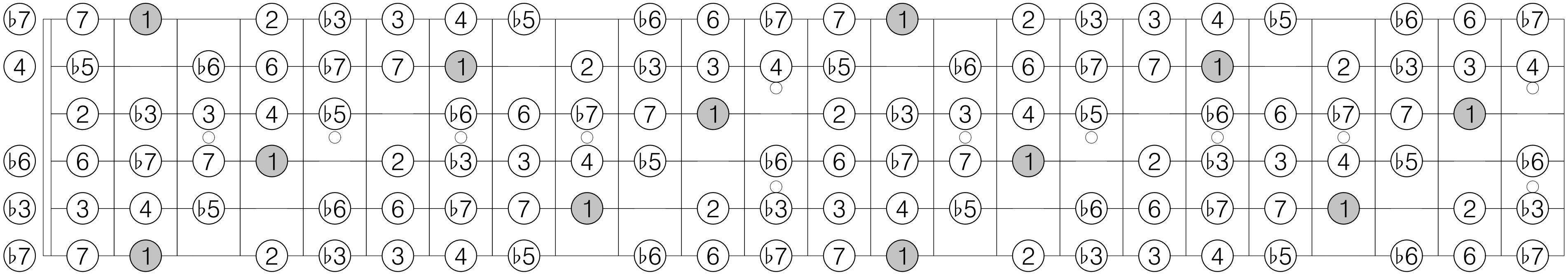

F# transposition 5 of Mode 7 [1, 1, 1, 2, 1]

1 ♭2 2 ♭3 3 ♭5 5 ♭6 6 ♭7 1 ♭2 2 ♭3 3 ♭5 5 ♭6 6 ♭7

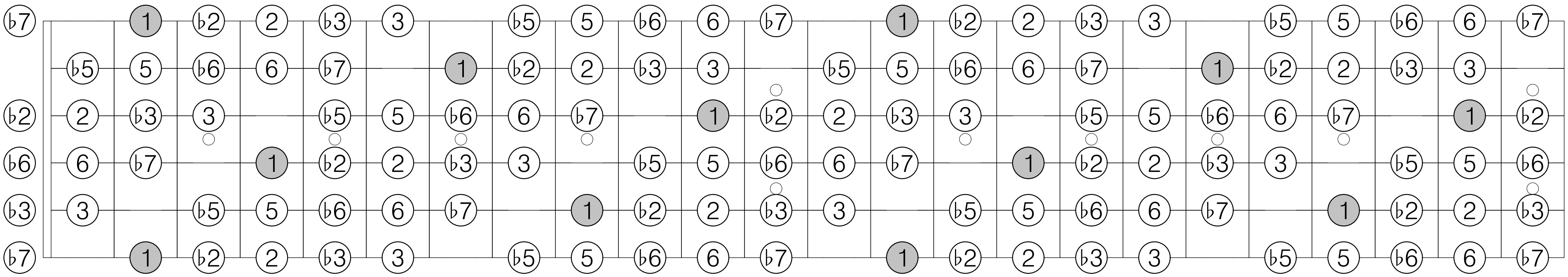

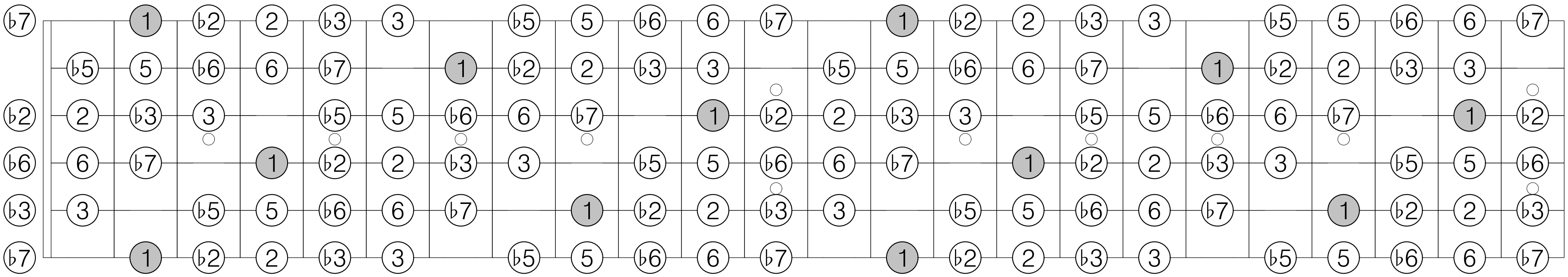

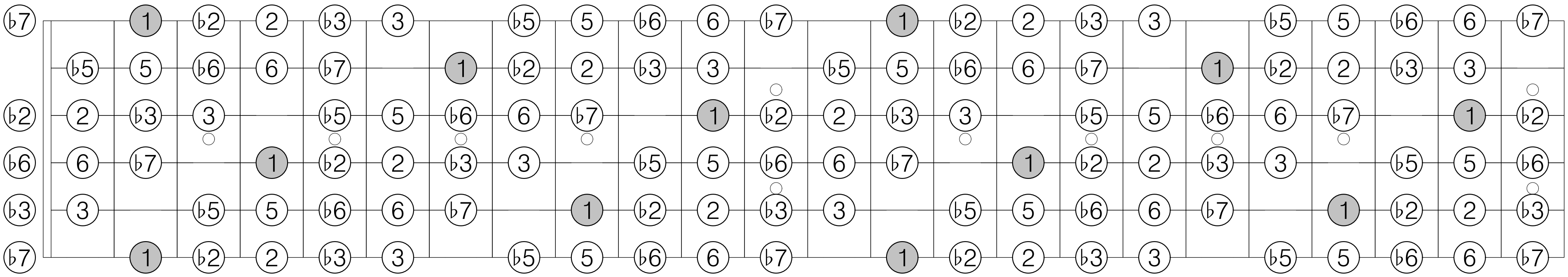

G transposition 1 of Mode 1 [2]

1 2 3 ♭5 ♭6 ♭7 1 2 3 ♭5 ♭6 ♭7

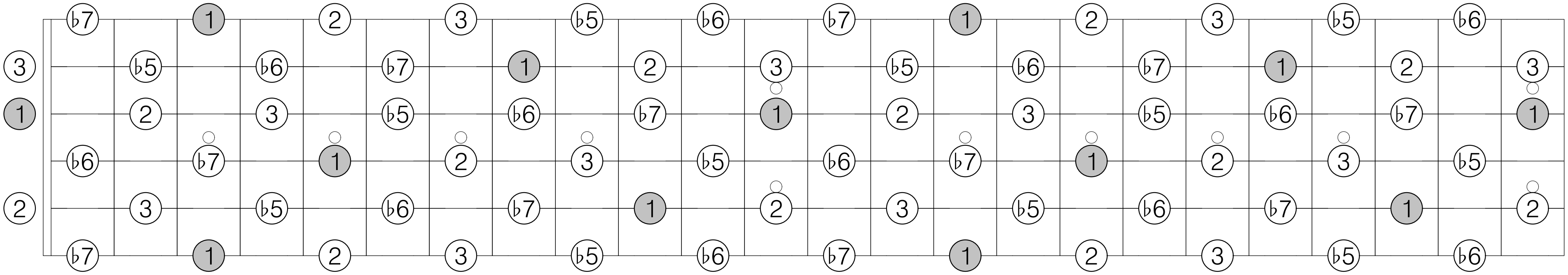

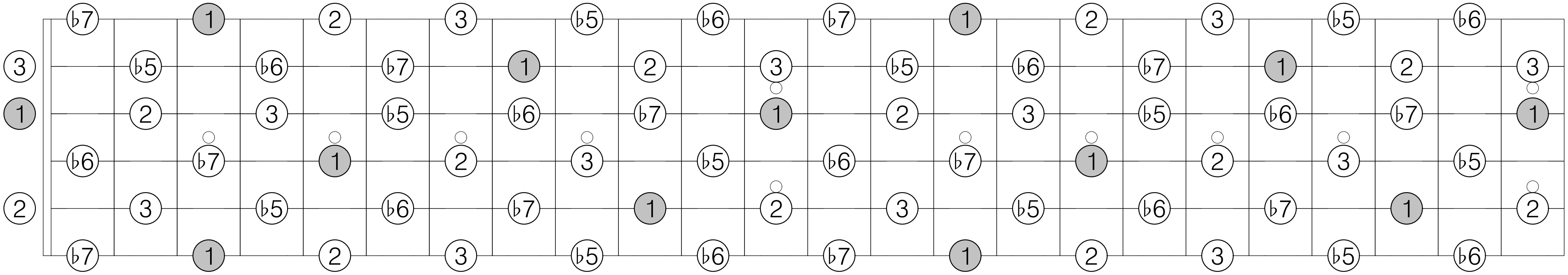

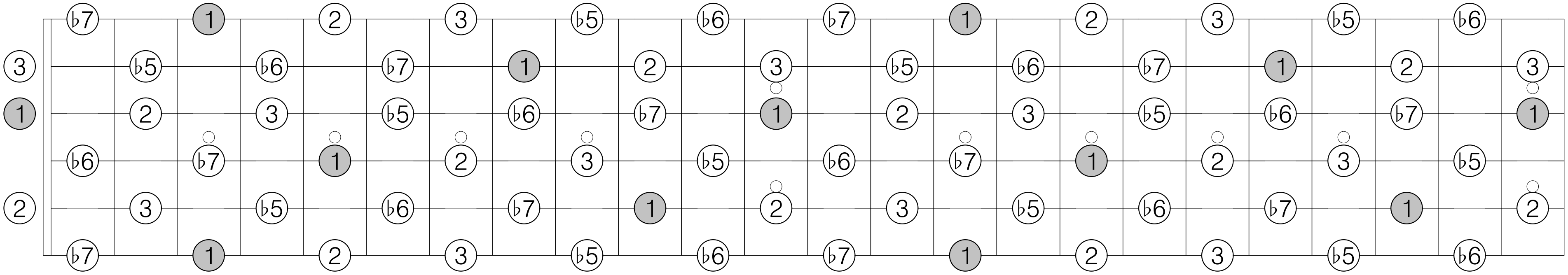

G transposition 1 of Mode 2 [1, 2]

1 ♭2 ♭3 3 ♭5 5 6 ♭7 1 ♭2 ♭3 3 ♭5 5 6 ♭7

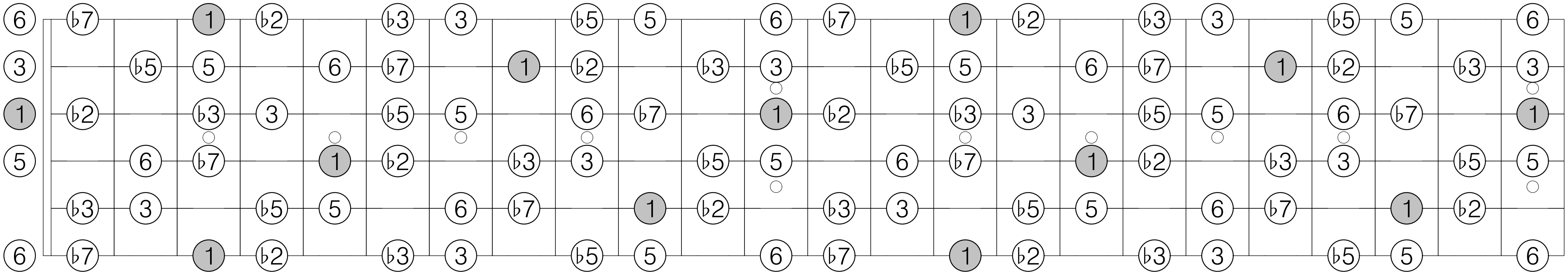

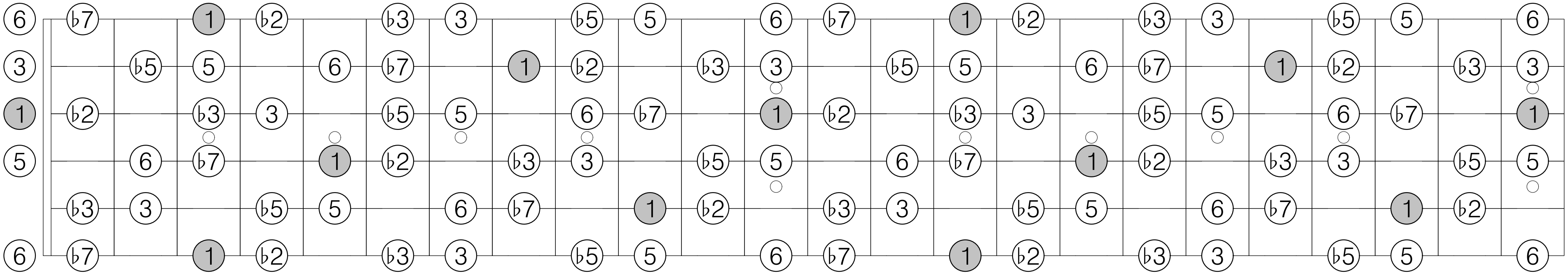

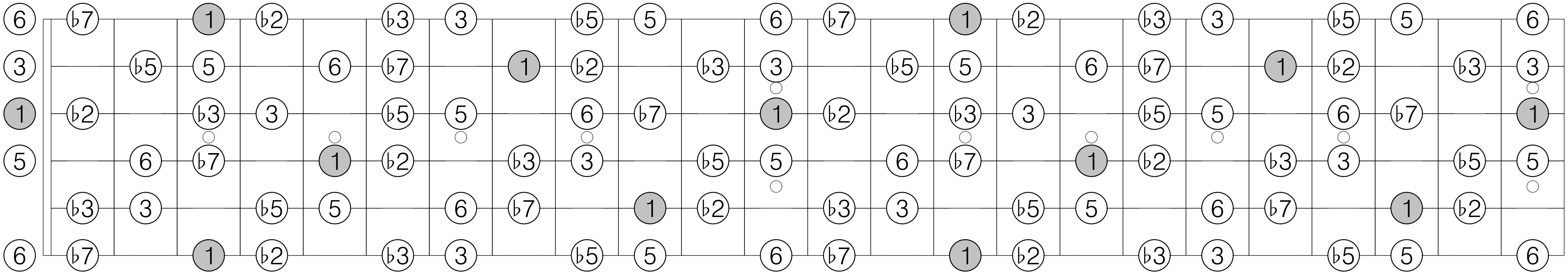

G transposition 2 of Mode 2 [1, 2]

1 2 ♭3 4 ♭5 ♭6 6 7 1 2 ♭3 4 ♭5 ♭6 6 7

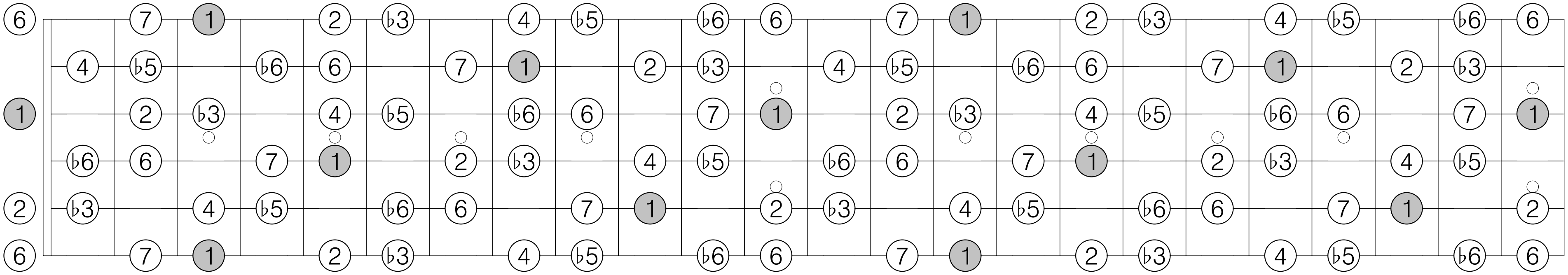

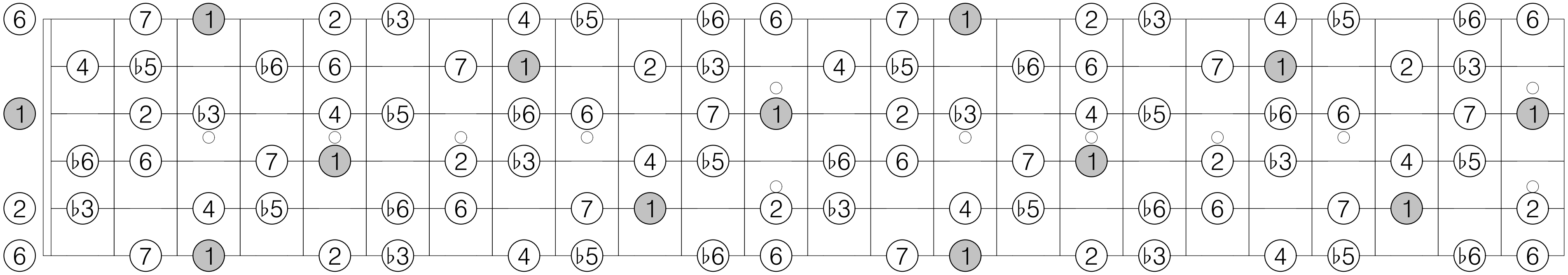

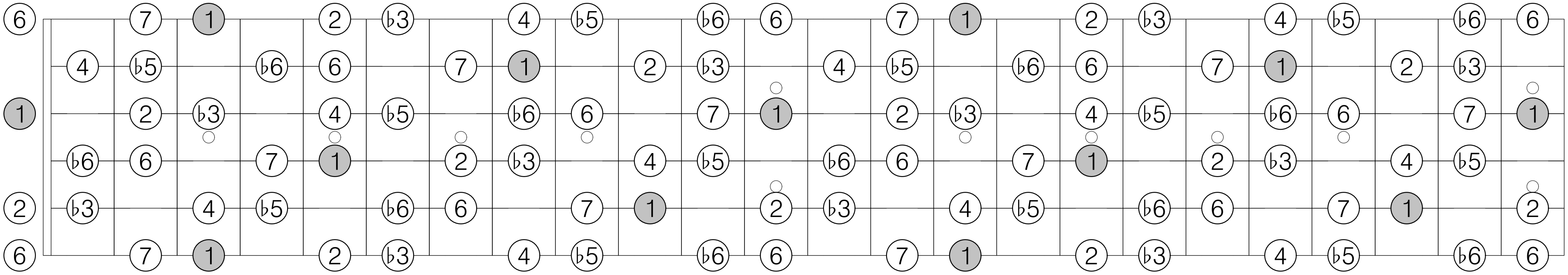

G transposition 1 of Mode 3 [1, 1, 2]

1 ♭2 2 3 4 ♭5 ♭6 6 ♭7 1 ♭2 2 3 4 ♭5 ♭6 6 ♭7

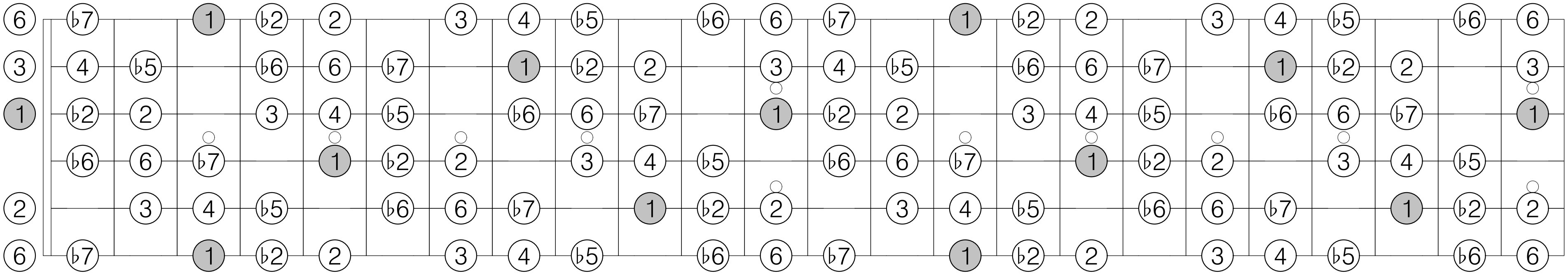

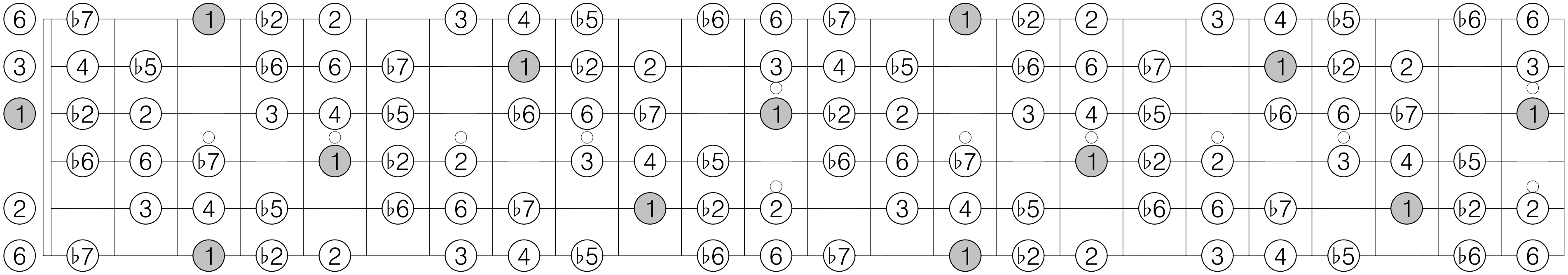

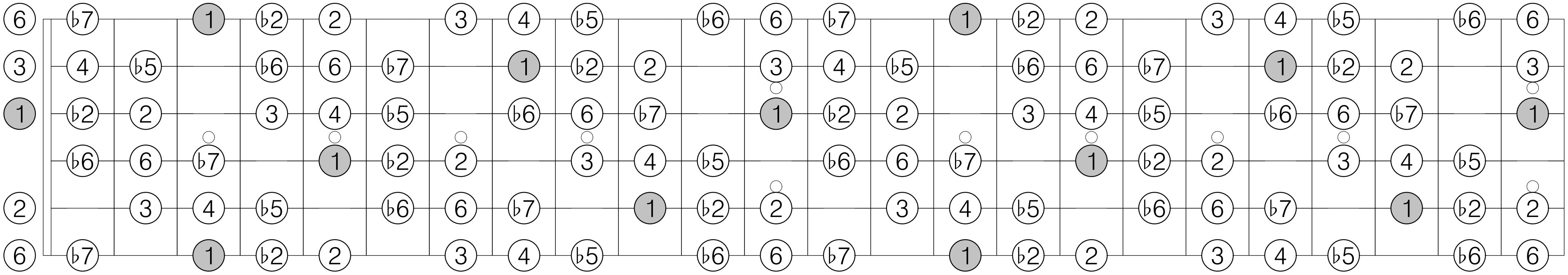

G transposition 2 of Mode 3 [1, 1, 2]

1 ♭2 ♭3 3 4 5 ♭6 6 7 1 ♭2 ♭3 3 4 5 ♭6 6 7

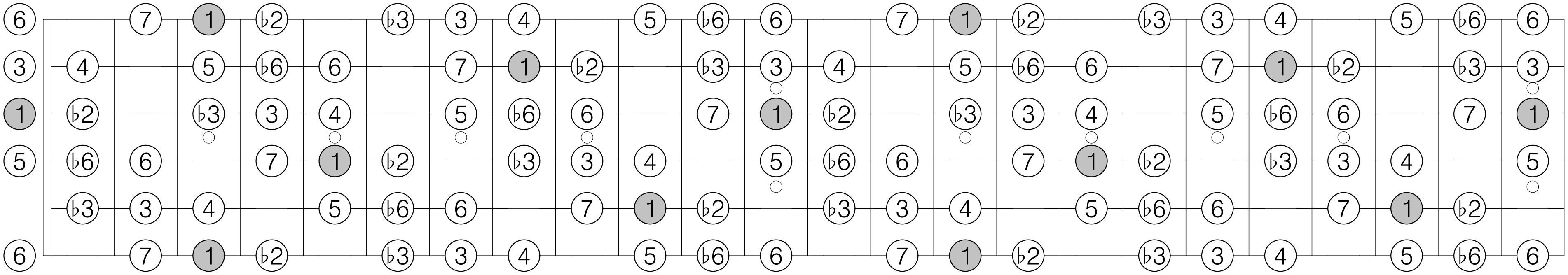

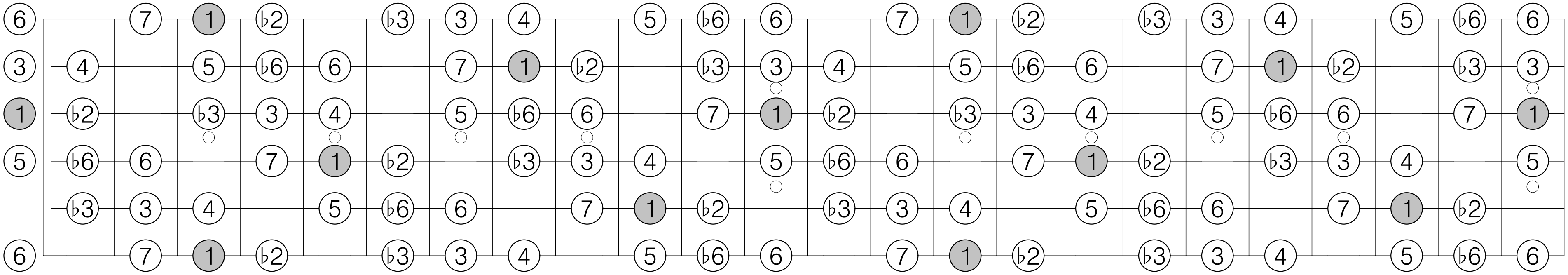

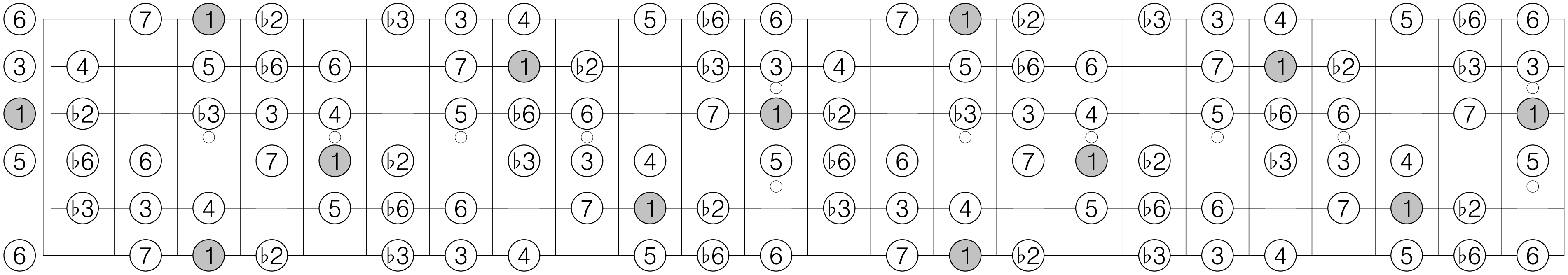

G transposition 3 of Mode 3 [1, 1, 2]

1 2 ♭3 3 ♭5 5 ♭6 ♭7 7 1 2 ♭3 3 ♭5 5 ♭6 ♭7 7

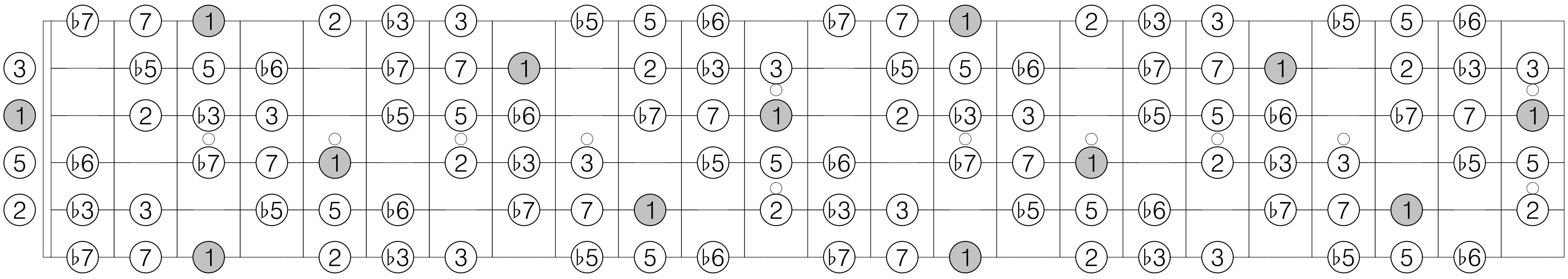

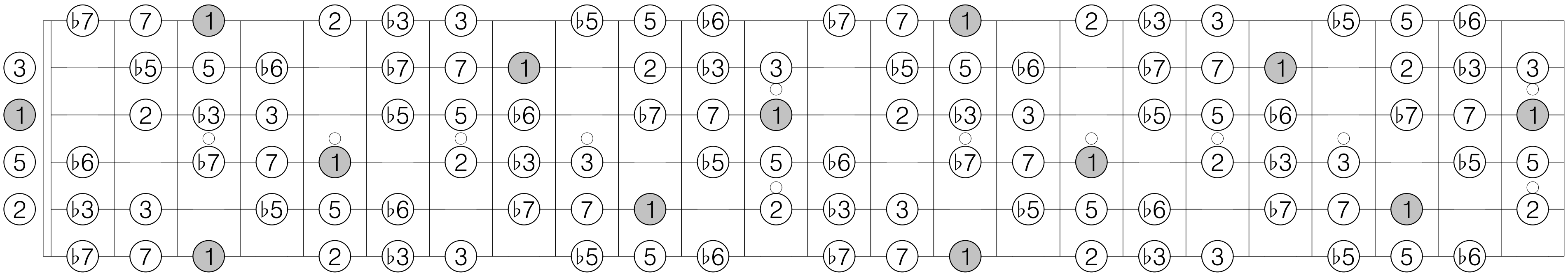

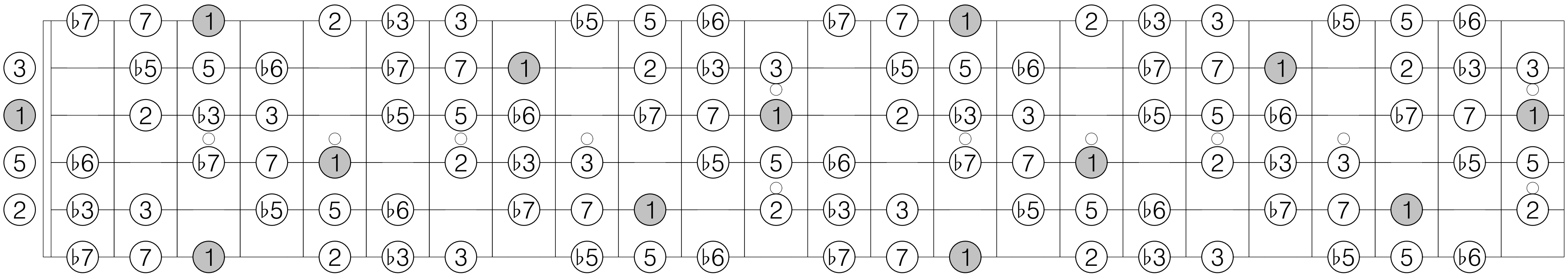

G transposition 1 of Mode 4 [1, 1, 3, 1]

1 ♭2 2 4 ♭5 5 ♭6 7 1 ♭2 2 4 ♭5 5 ♭6 7

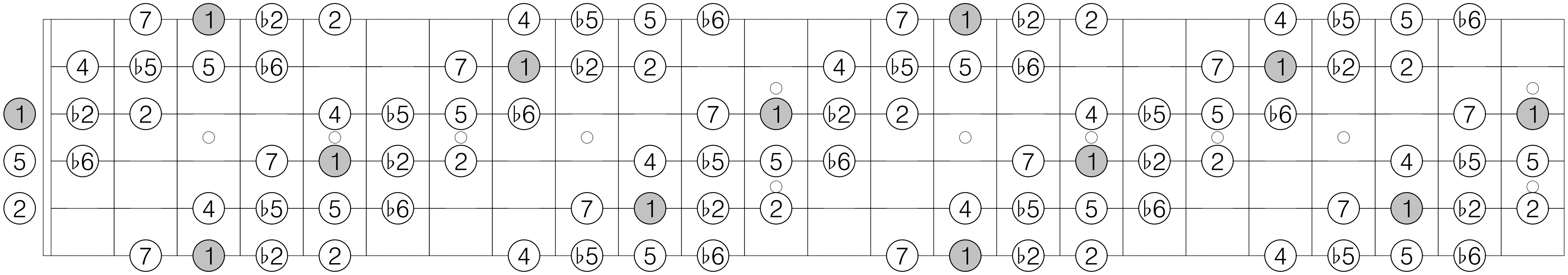

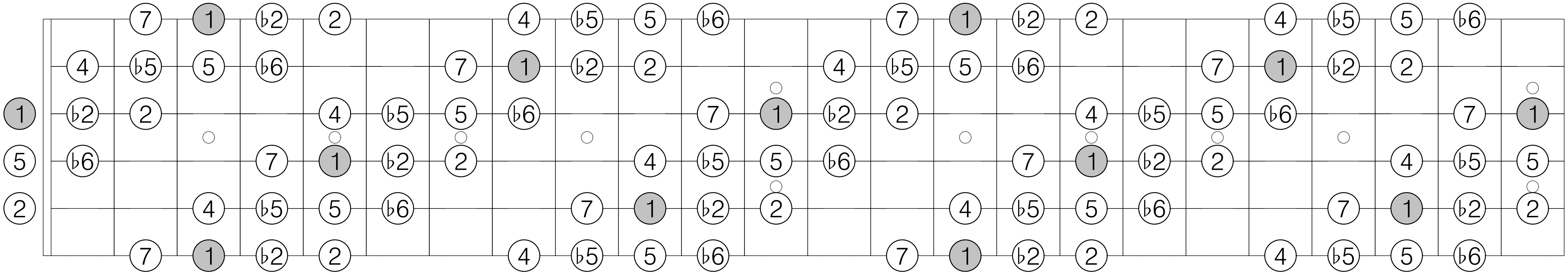

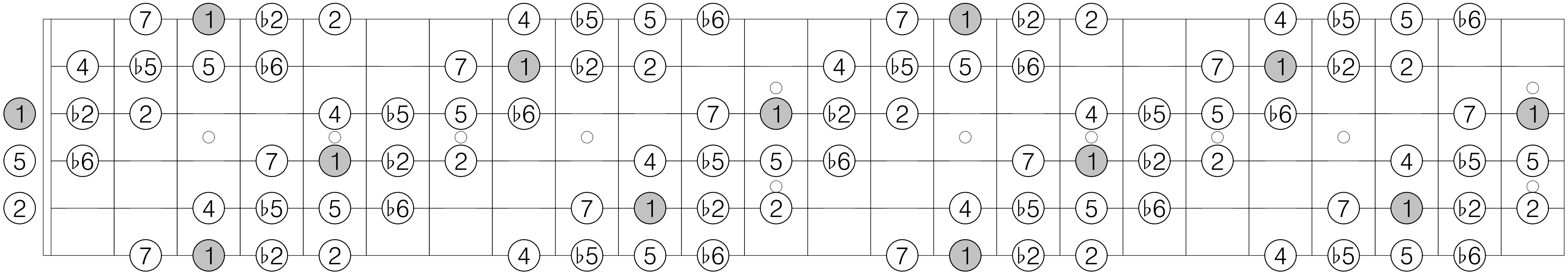

G transposition 2 of Mode 4 [1, 1, 3, 1]

1 ♭2 3 4 ♭5 5 ♭7 7 1 ♭2 3 4 ♭5 5 ♭7 7

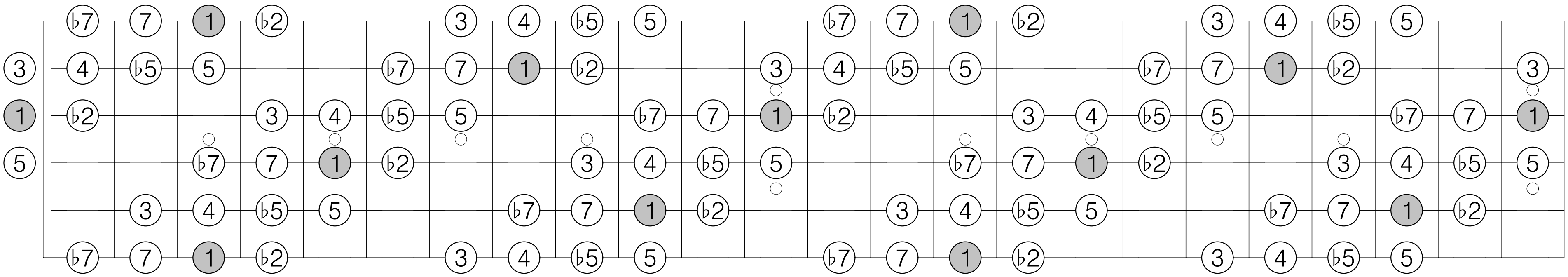

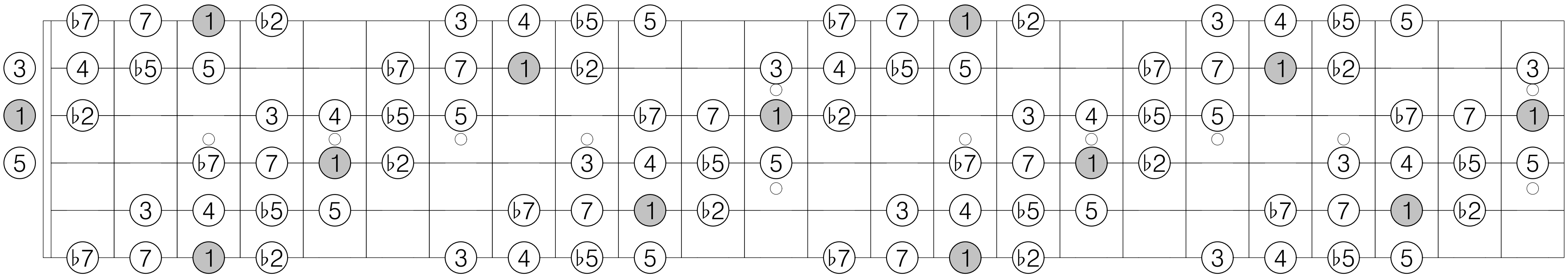

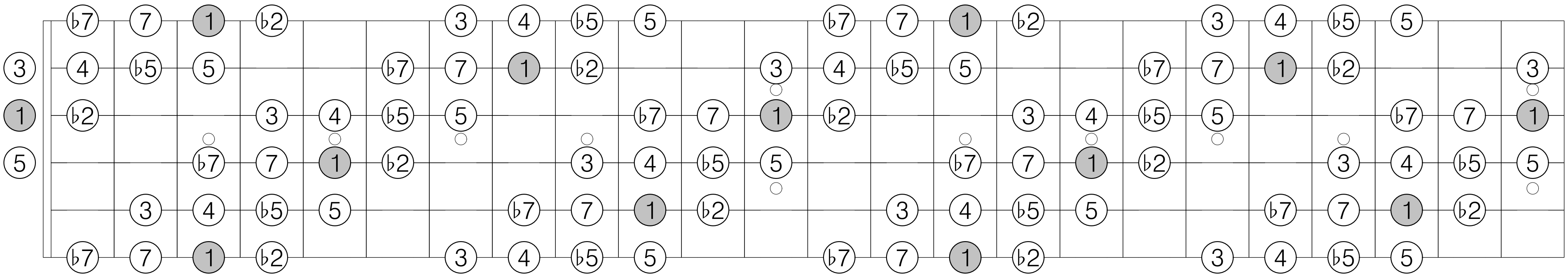

G transposition 3 of Mode 4 [1, 1, 3, 1]

1 ♭3 3 4 ♭5 6 ♭7 7 1 ♭3 3 4 ♭5 6 ♭7 7

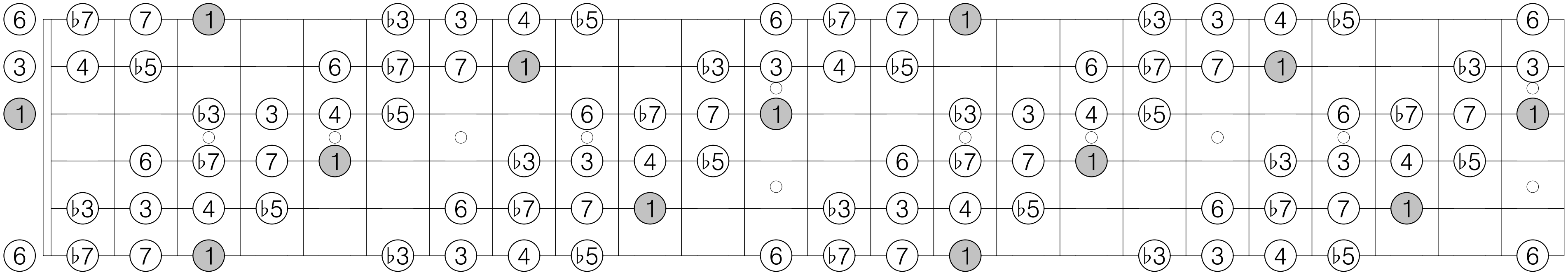

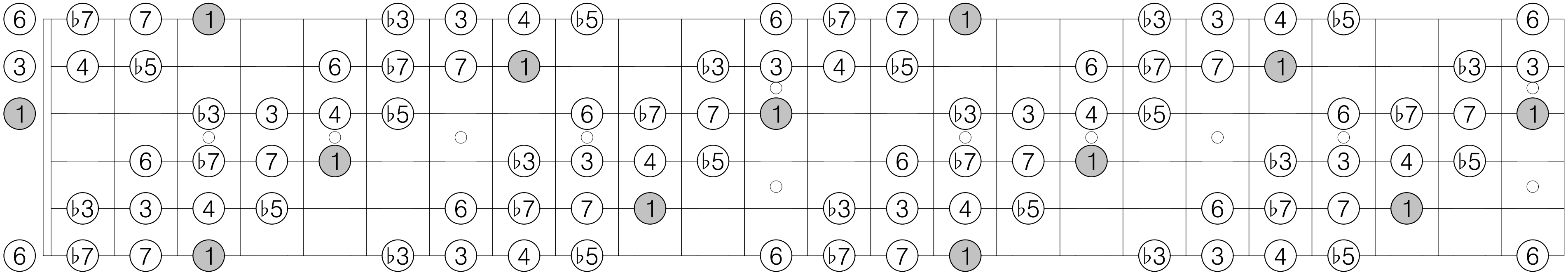

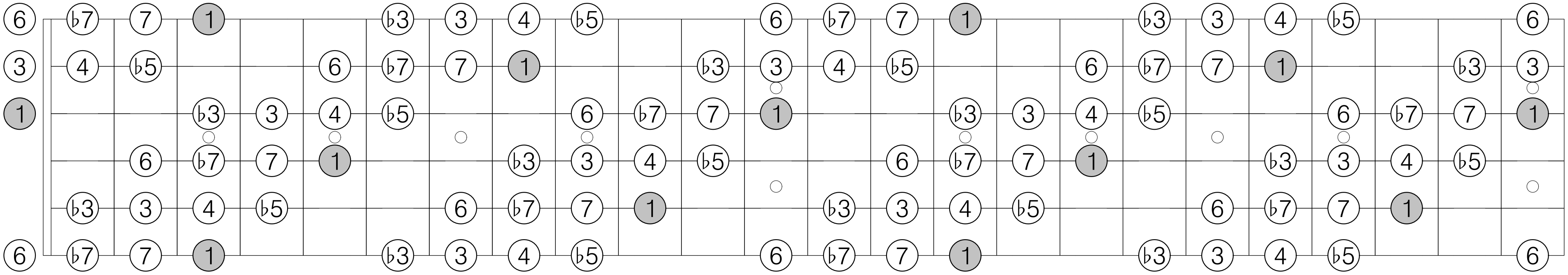

G transposition 4 of Mode 4 [1, 1, 3, 1]

1 ♭2 2 ♭3 ♭5 5 ♭6 6 1 ♭2 2 ♭3 ♭5 5 ♭6 6

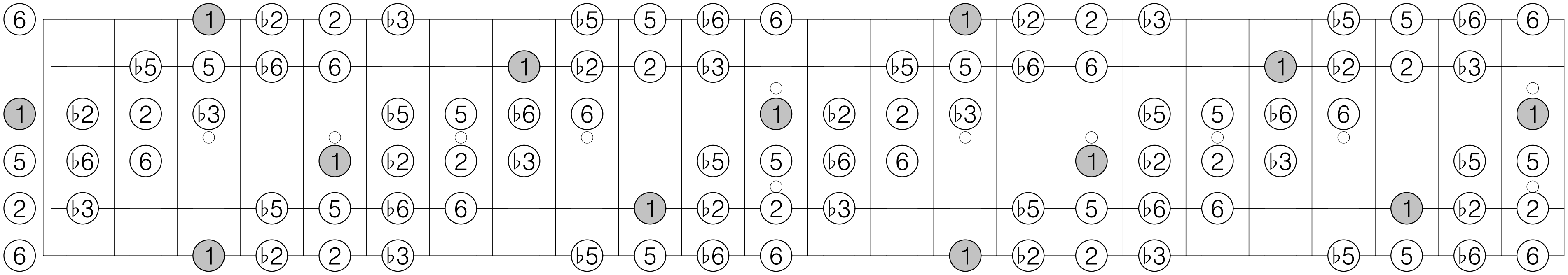

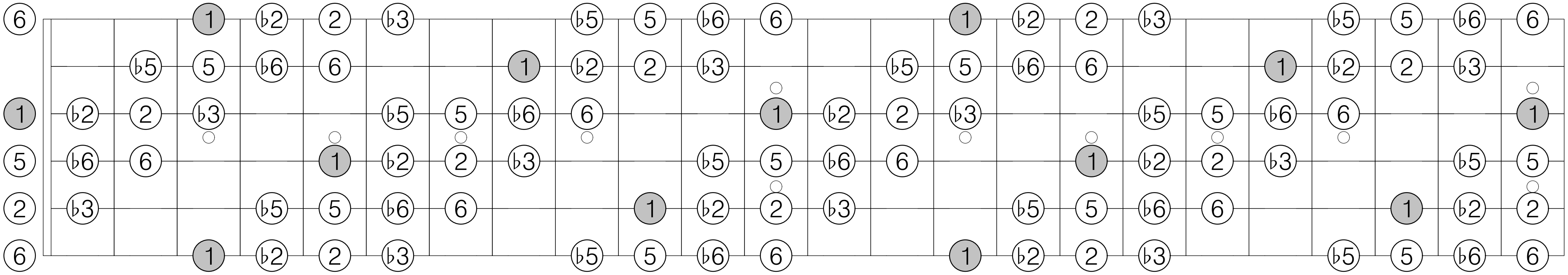

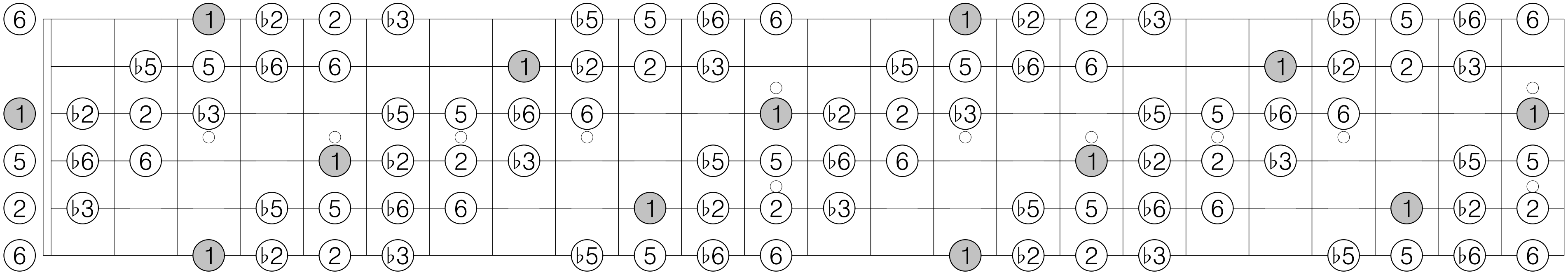

G transposition 1 of Mode 5 [1, 4, 1]

1 ♭2 4 ♭5 5 7 1 ♭2 4 ♭5 5 7

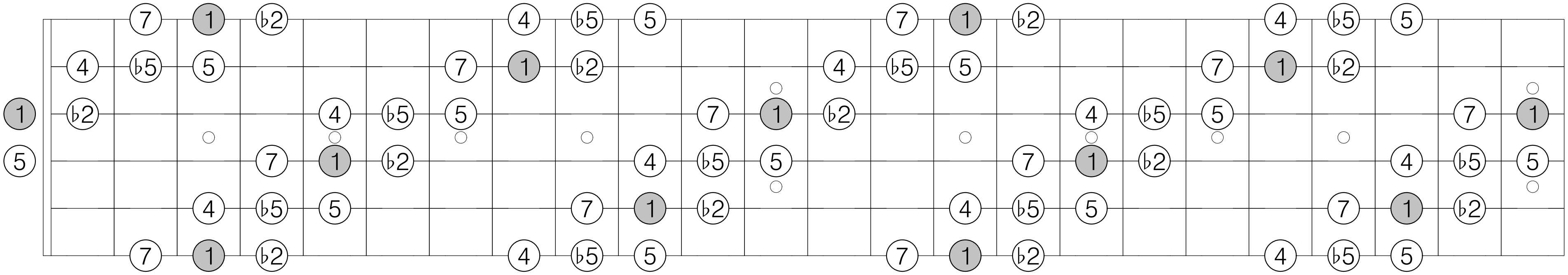

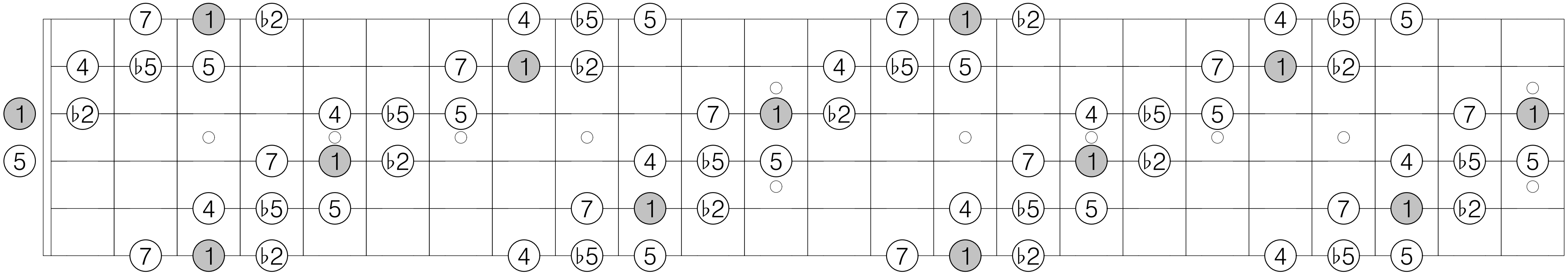

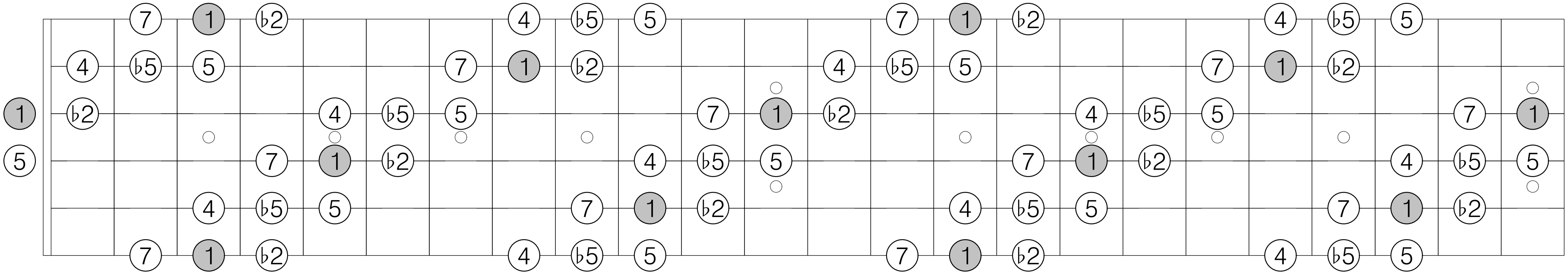

G transposition 2 of Mode 5 [1, 4, 1]

1 3 4 ♭5 ♭7 7 1 3 4 ♭5 ♭7 7

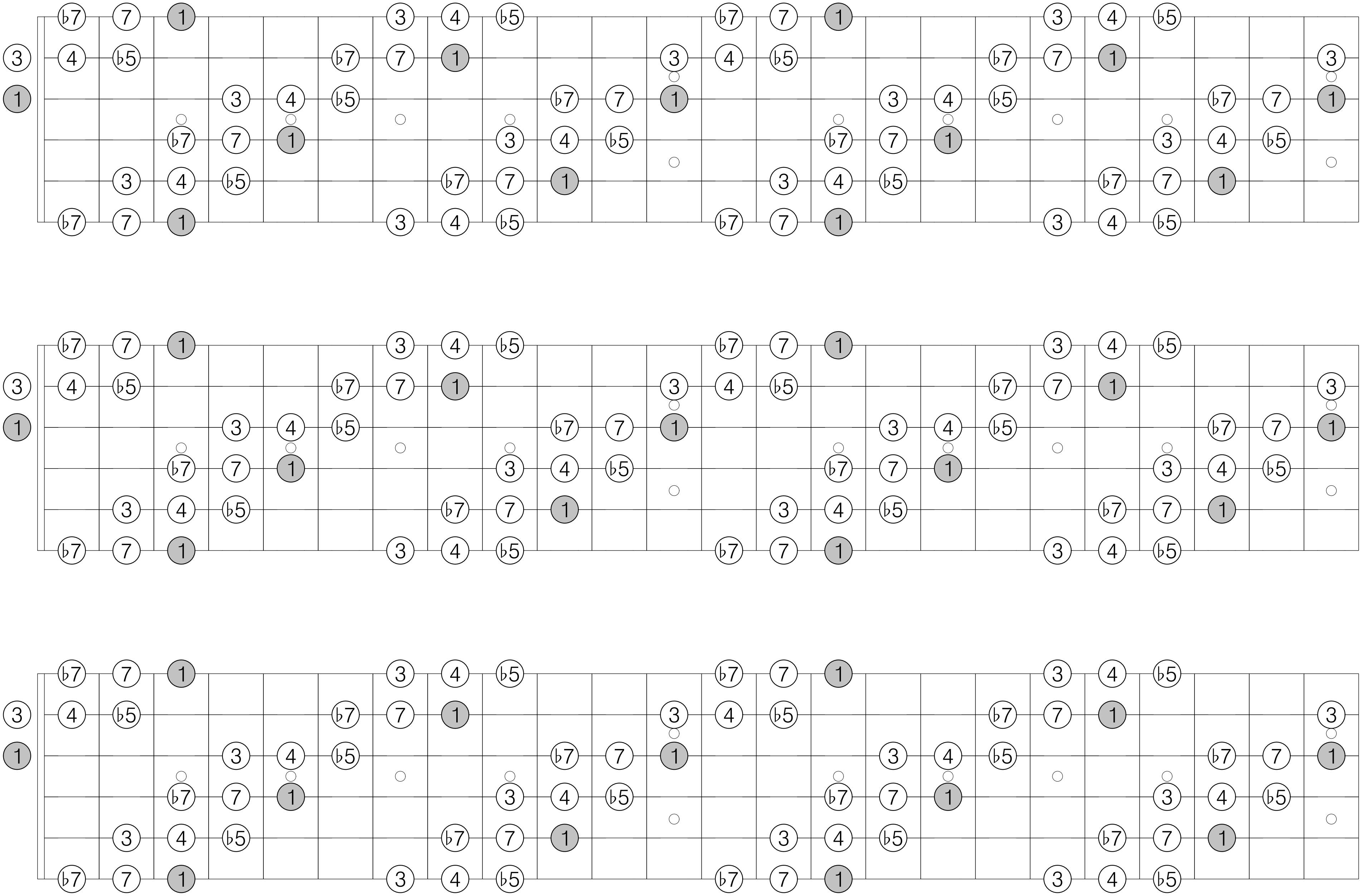

G transposition 3 of Mode 5 [1, 4, 1]

1 ♭2 2 ♭5 5 ♭6 1 ♭2 2 ♭5 5 ♭6

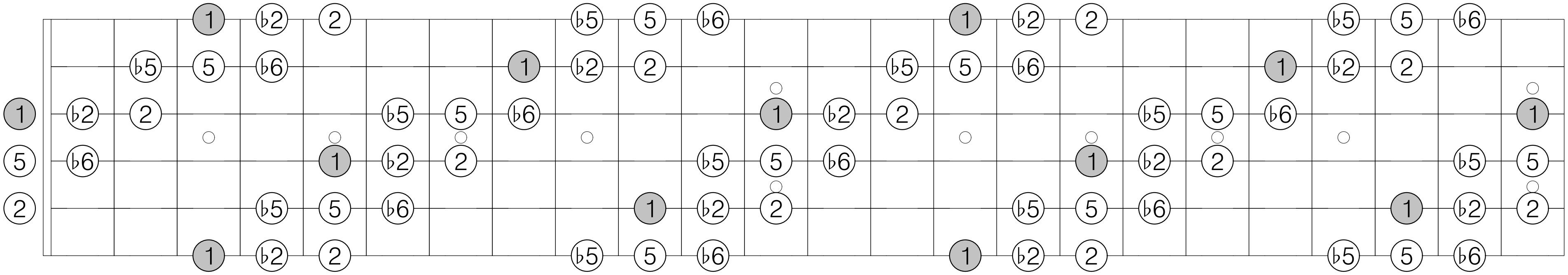

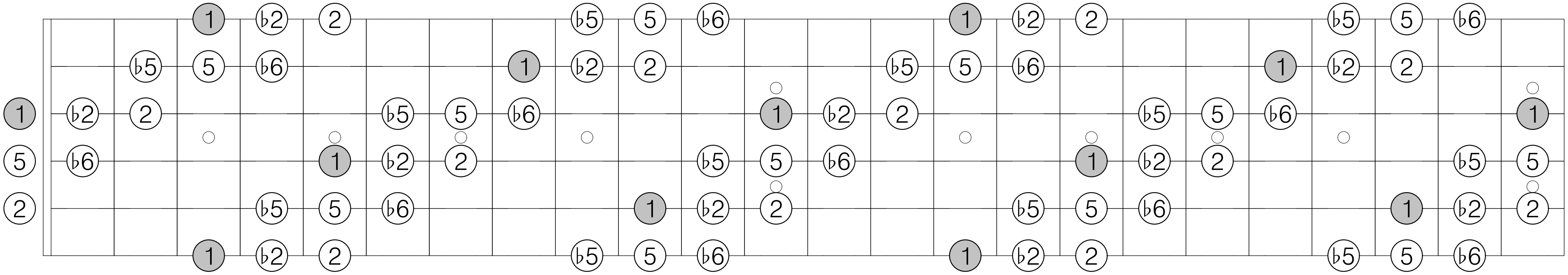

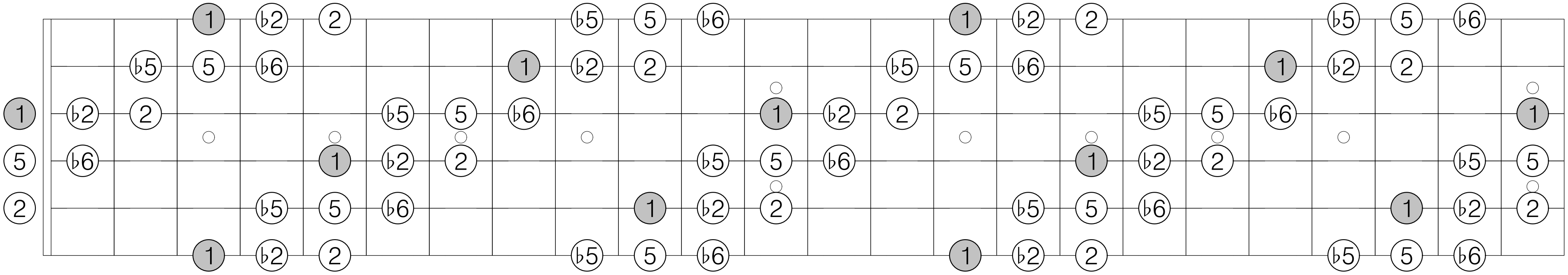

G transposition 1 of Mode 6 [1, 1, 2, 2]

1 ♭2 2 3 ♭5 5 ♭6 ♭7 1 ♭2 2 3 ♭5 5 ♭6 ♭7

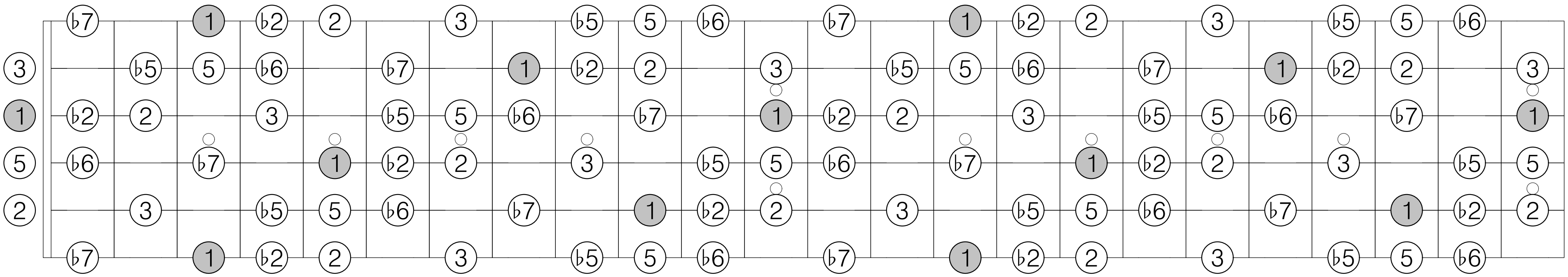

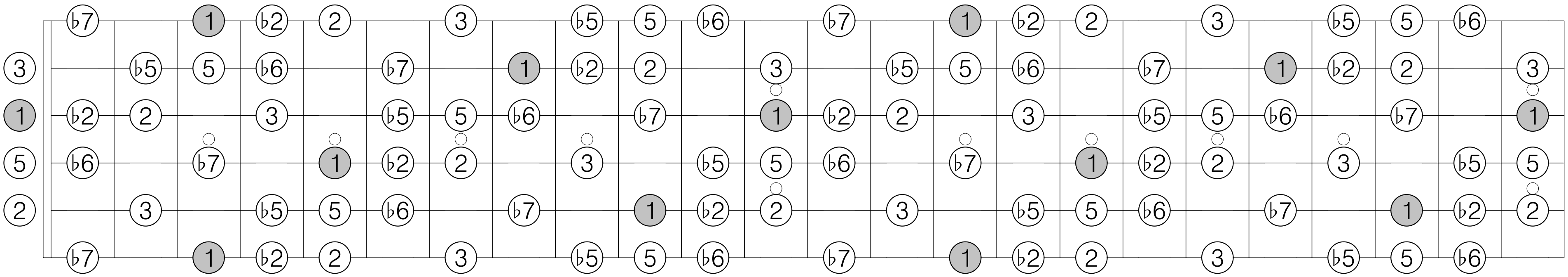

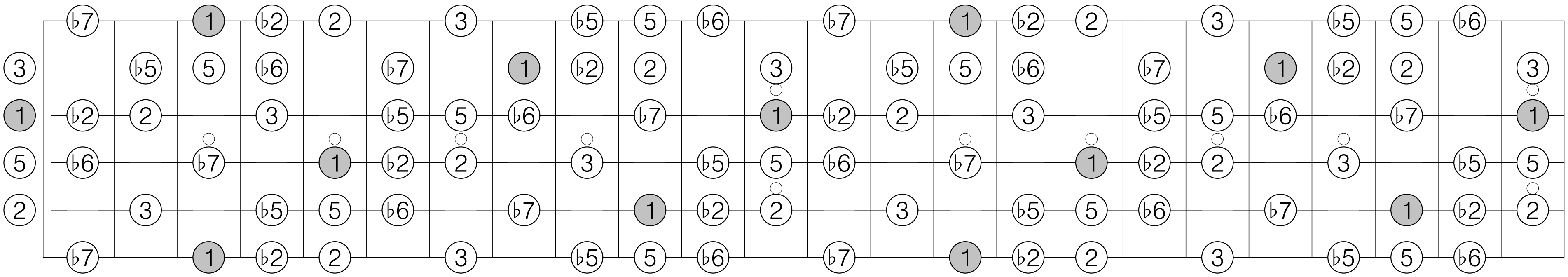

G transposition 2 of Mode 6 [1, 1, 2, 2]

1 ♭2 ♭3 4 ♭5 5 6 7 1 ♭2 ♭3 4 ♭5 5 6 7

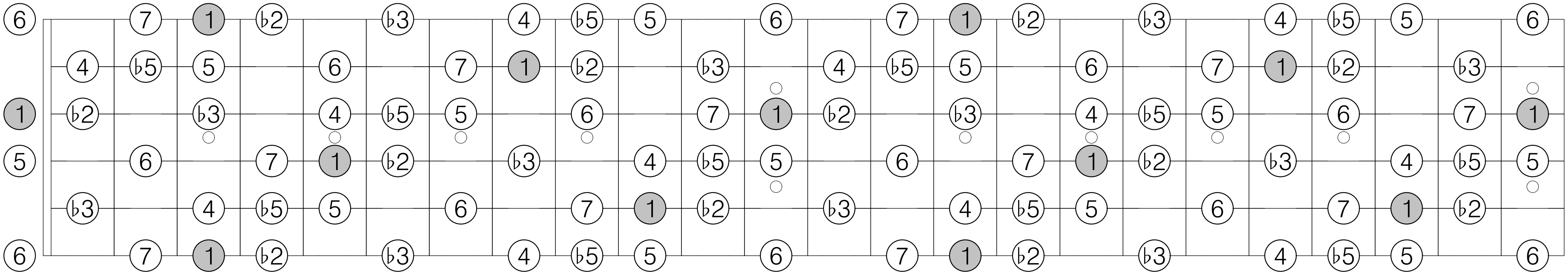

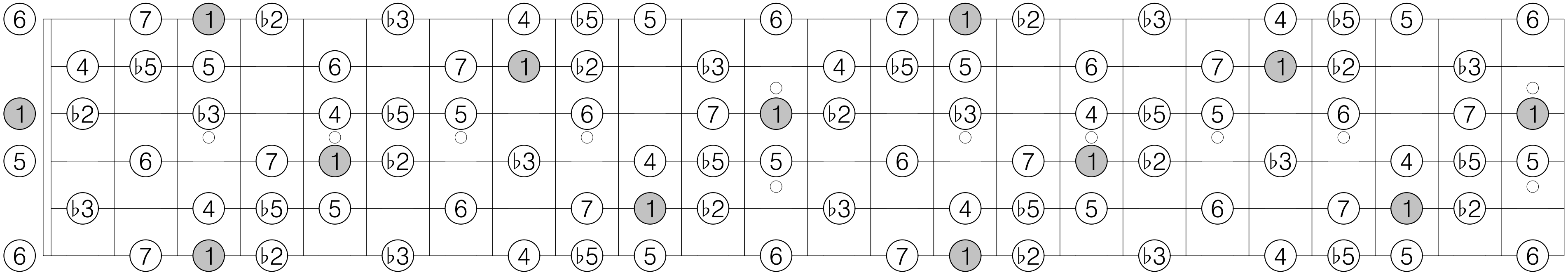

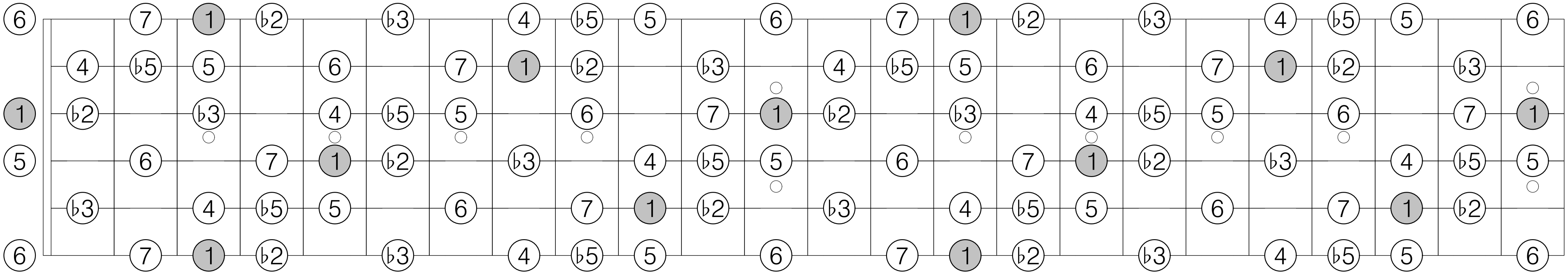

G transposition 3 of Mode 6 [1, 1, 2, 2]

1 2 3 4 ♭5 ♭6 ♭7 7 1 2 3 4 ♭5 ♭6 ♭7 7

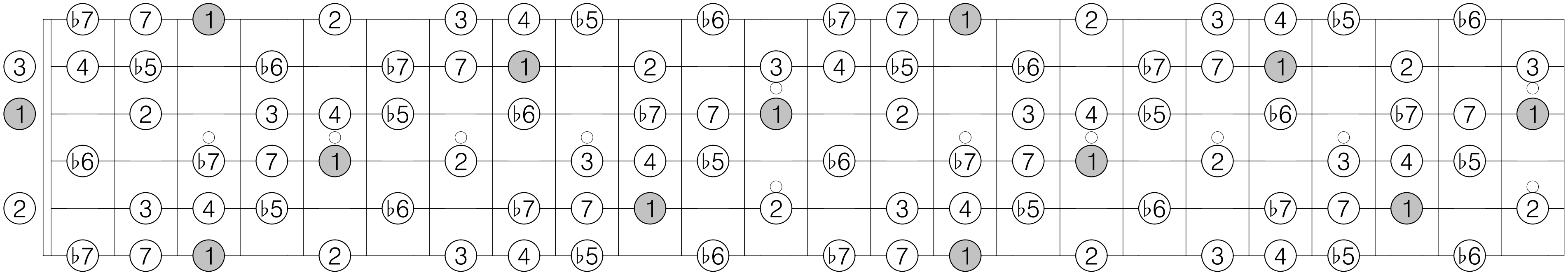

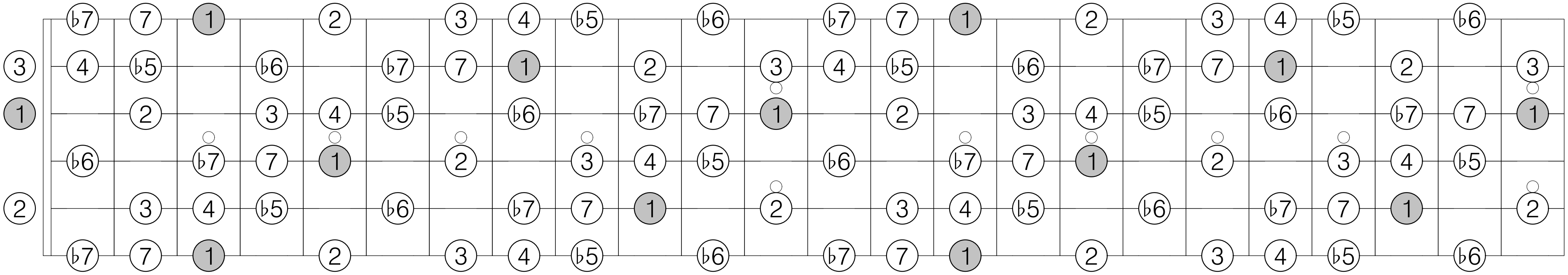

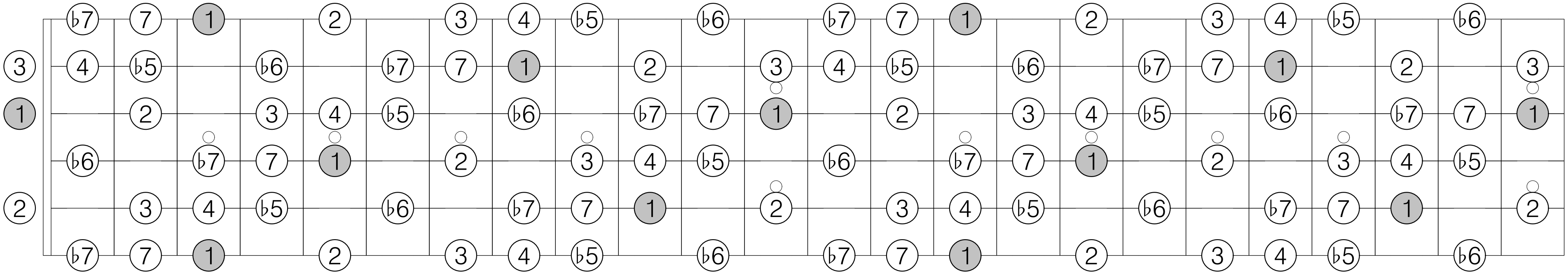

G transposition 4 of Mode 6 [1, 1, 2, 2]

1 2 ♭3 3 ♭5 ♭6 6 ♭7 1 2 ♭3 3 ♭5 ♭6 6 ♭7

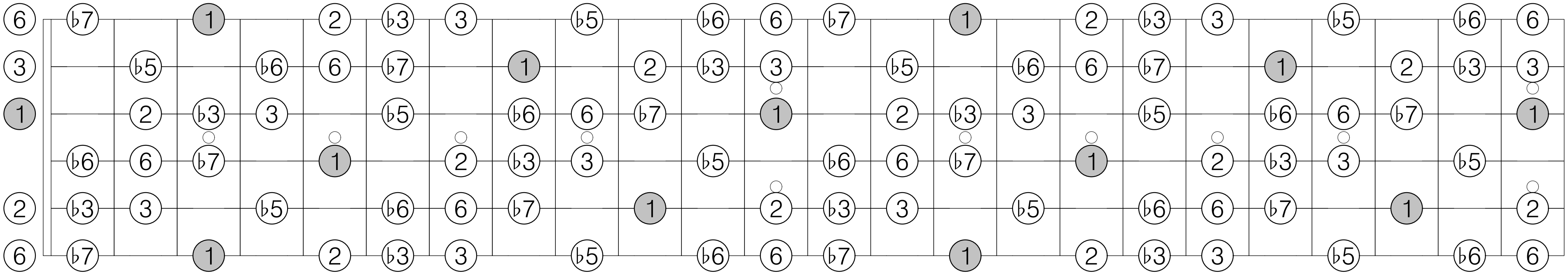

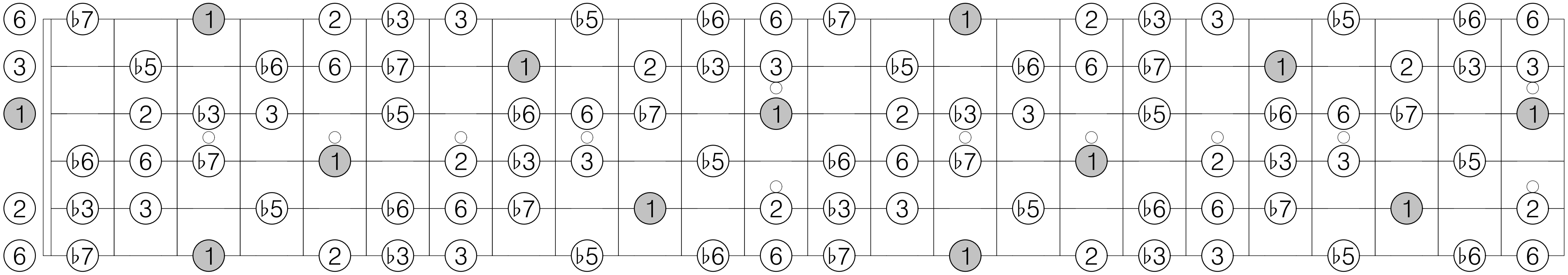

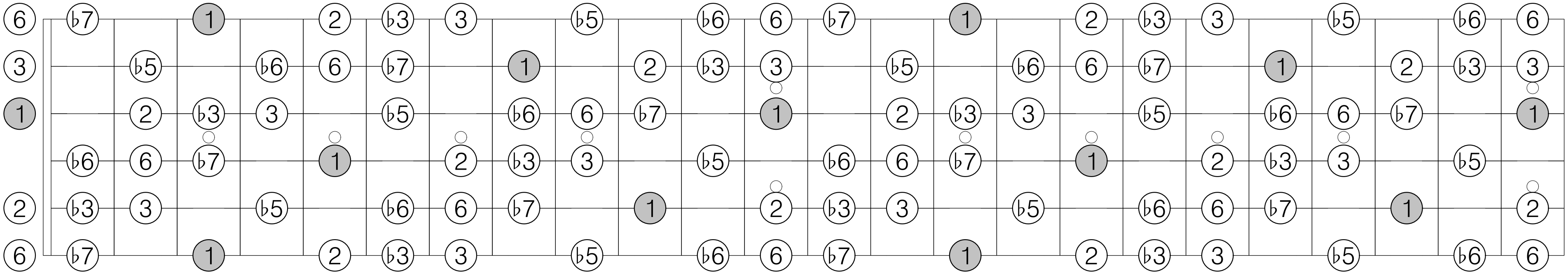

G transposition 1 of Mode 7 [1, 1, 1, 2, 1]

1 ♭2 2 ♭3 4 ♭5 5 ♭6 6 7 1 ♭2 2 ♭3 4 ♭5 5 ♭6 6 7

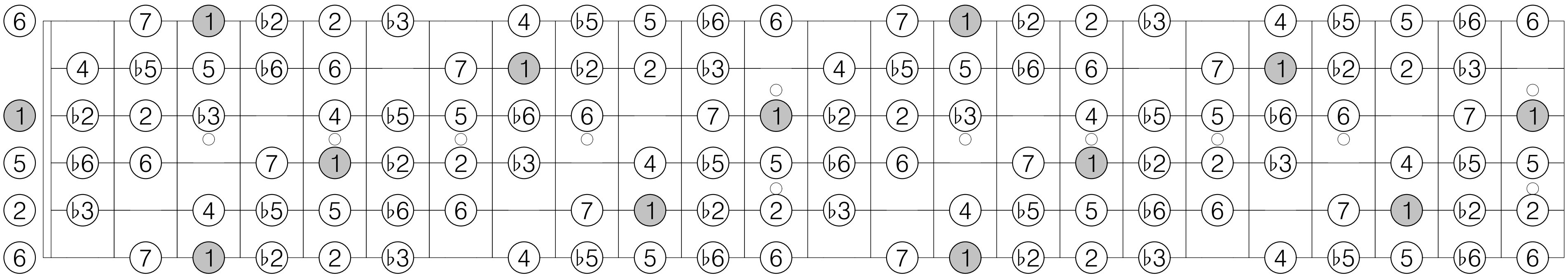

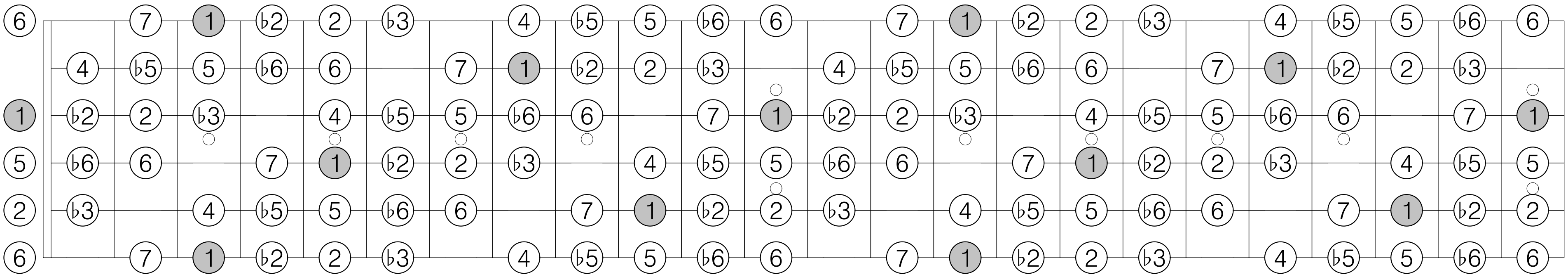

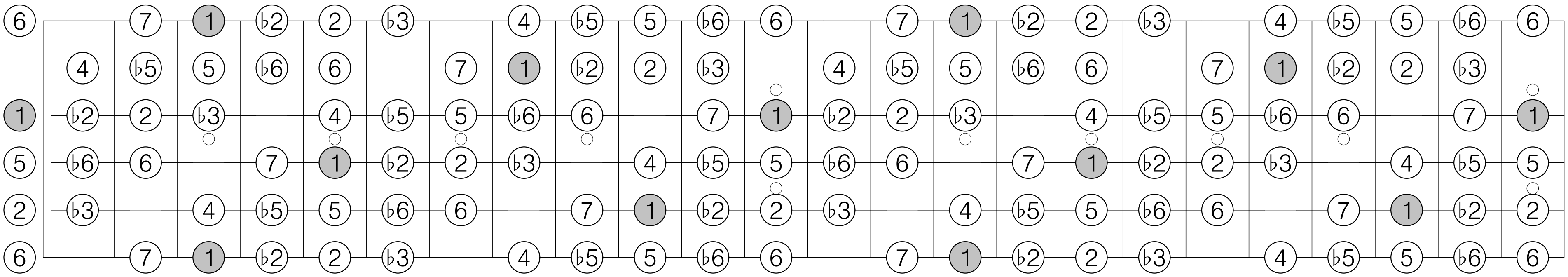

G transposition 2 of Mode 7 [1, 1, 1, 2, 1]

1 ♭2 2 3 4 ♭5 5 ♭6 ♭7 7 1 ♭2 2 3 4 ♭5 5 ♭6 ♭7 7

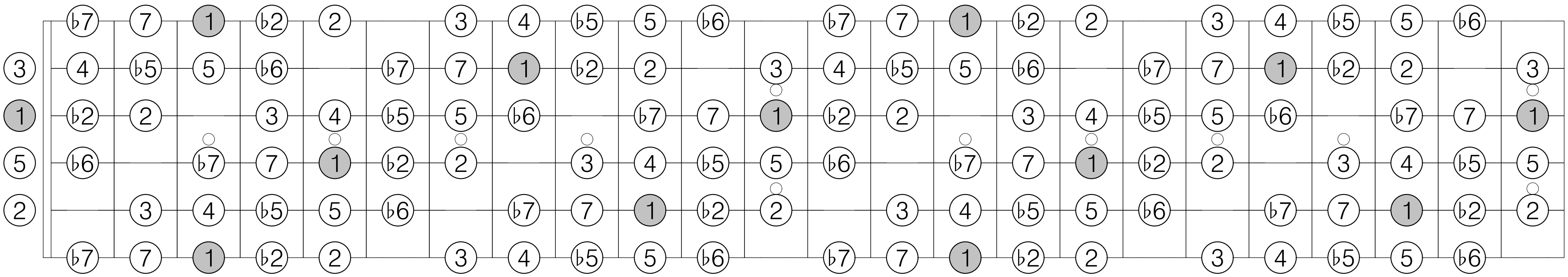

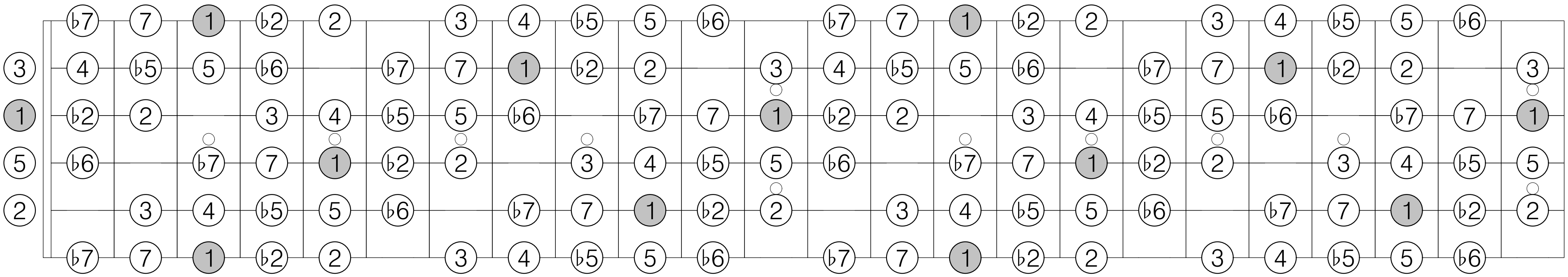

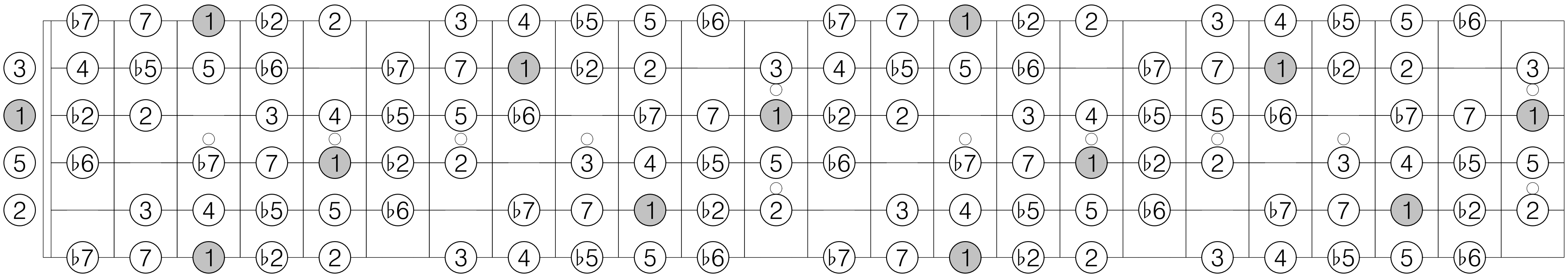

G transposition 3 of Mode 7 [1, 1, 1, 2, 1]

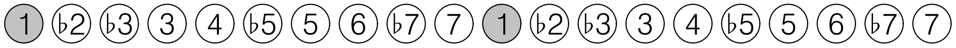

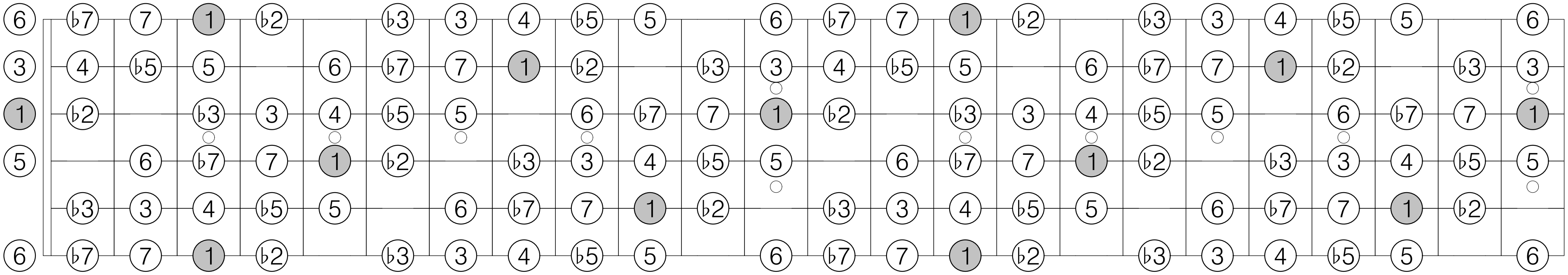

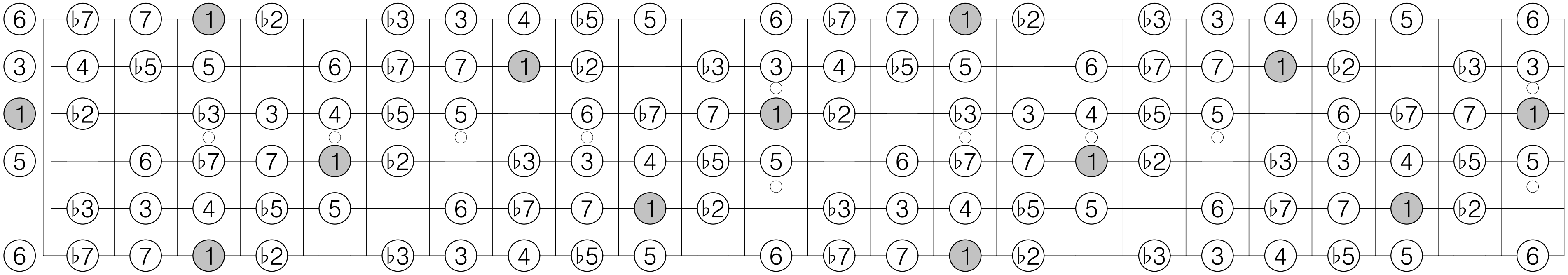

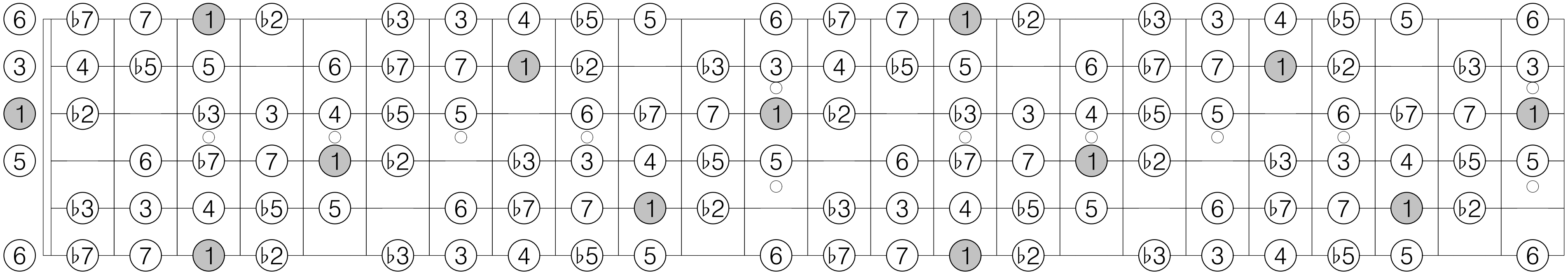

G transposition 4 of Mode 7 [1, 1, 1, 2, 1]

1 2 ♭3 3 4 ♭5 ♭6 6 ♭7 7 1 2 ♭3 3 4 ♭5 ♭6 6 ♭7 7

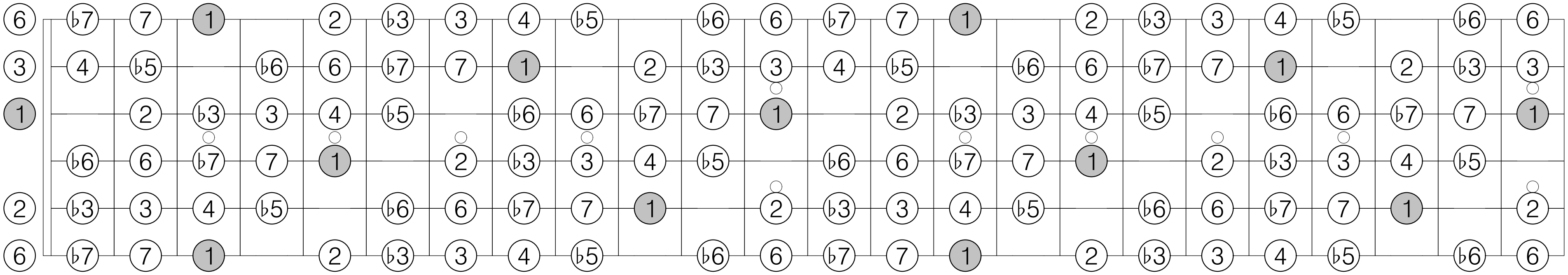

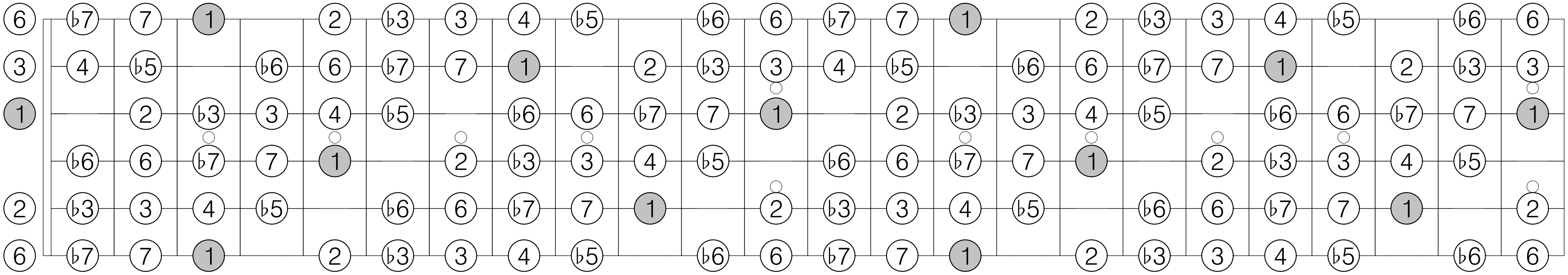

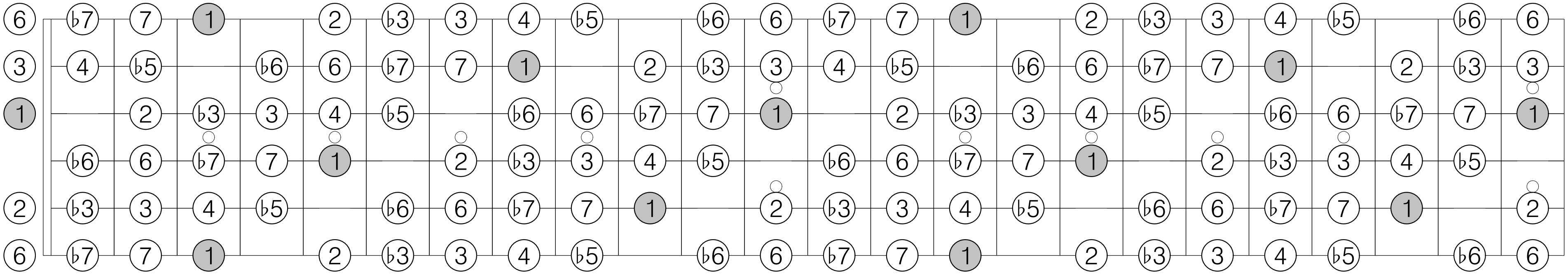

G transposition 5 of Mode 7 [1, 1, 1, 2, 1]

1 ♭2 2 ♭3 3 ♭5 5 ♭6 6 ♭7 1 ♭2 2 ♭3 3 ♭5 5 ♭6 6 ♭7

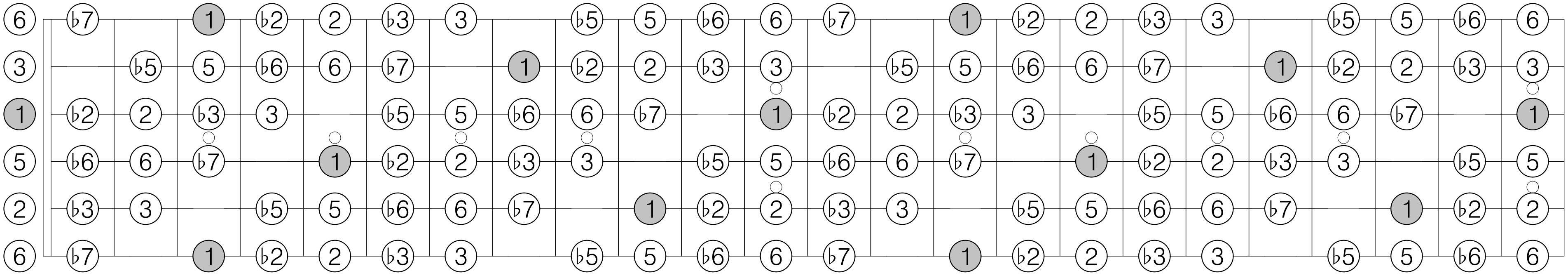

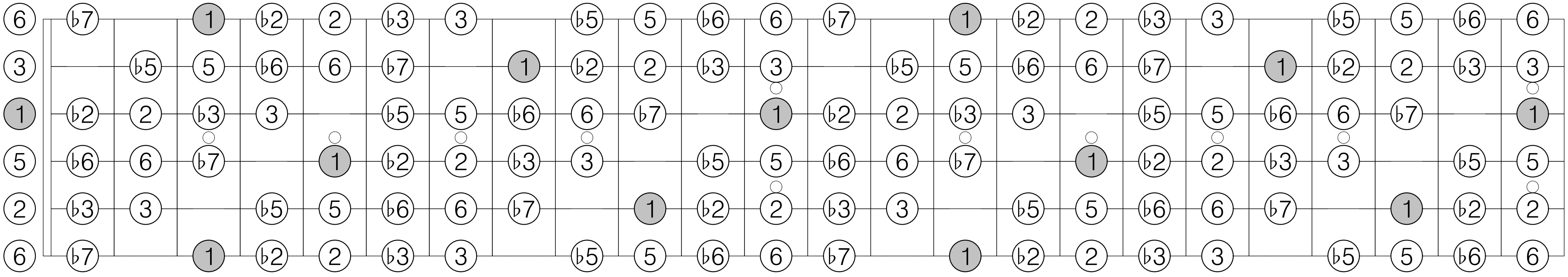

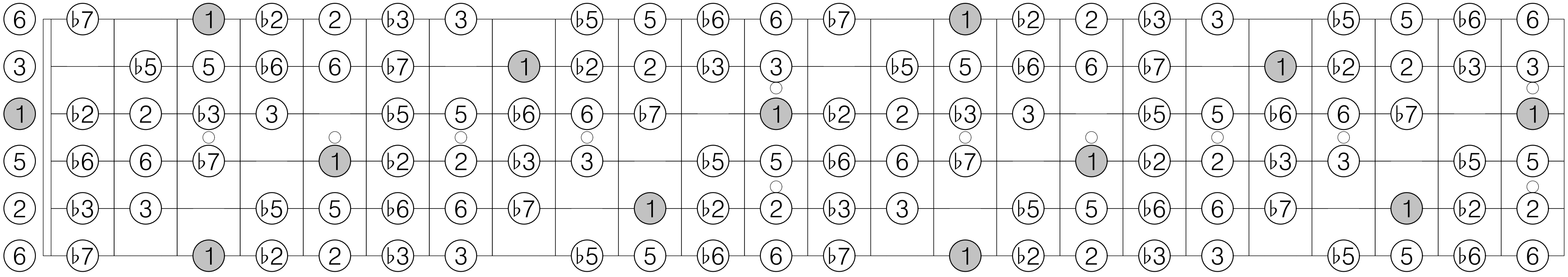

Ab transposition 1 of Mode 1 [2]

1 2 3 ♭5 ♭6 ♭7 1 2 3 ♭5 ♭6 ♭7

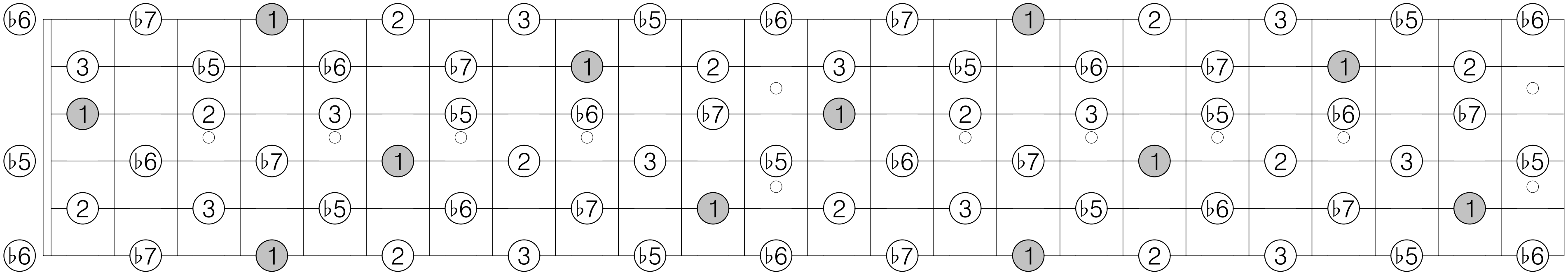

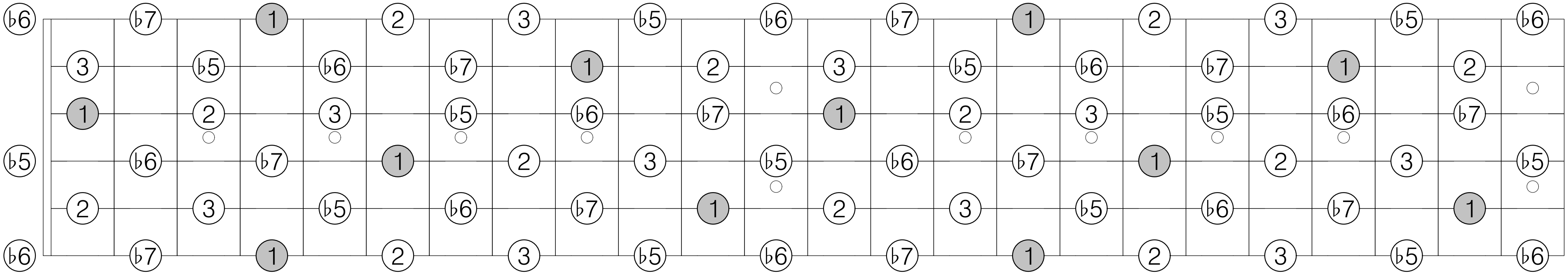

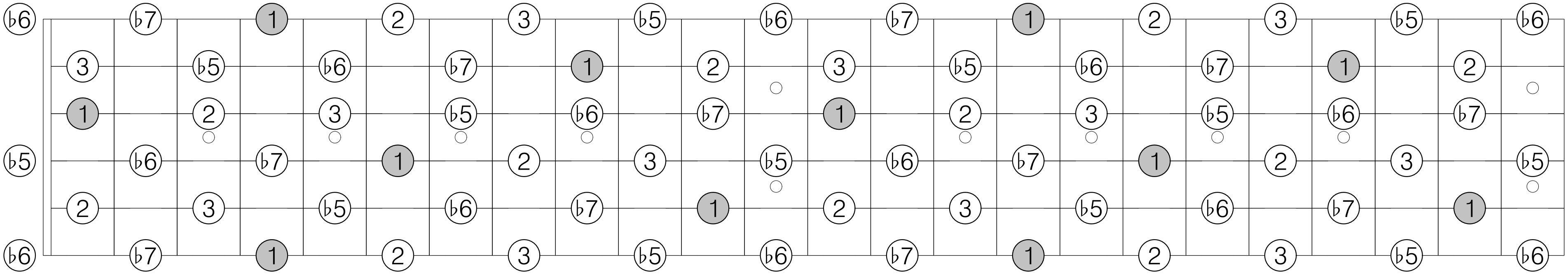

Ab transposition 1 of Mode 2 [1, 2]

1 ♭2 ♭3 3 ♭5 5 6 ♭7 1 ♭2 ♭3 3 ♭5 5 6 ♭7

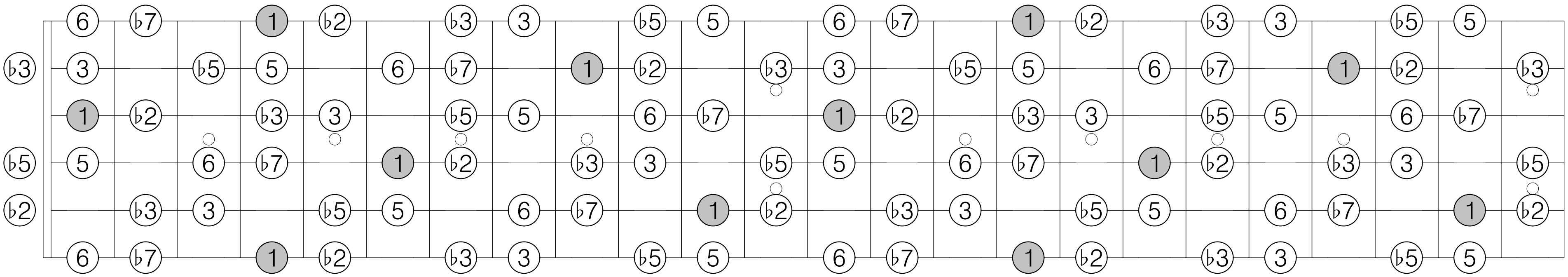

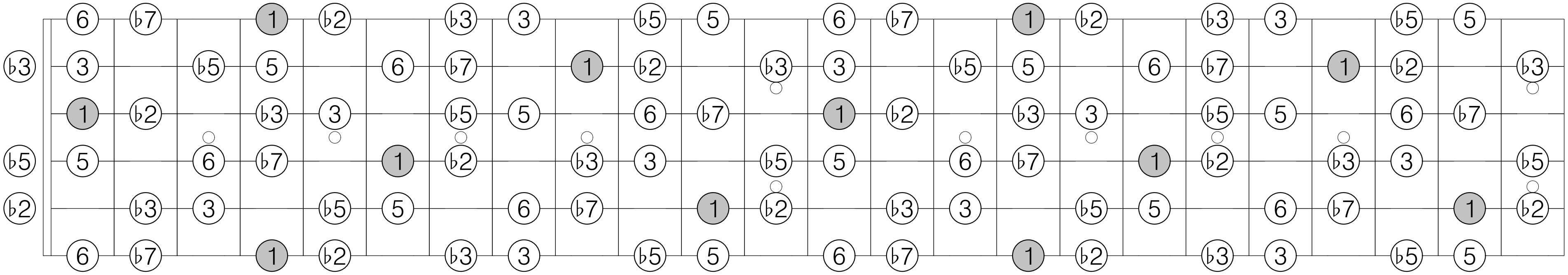

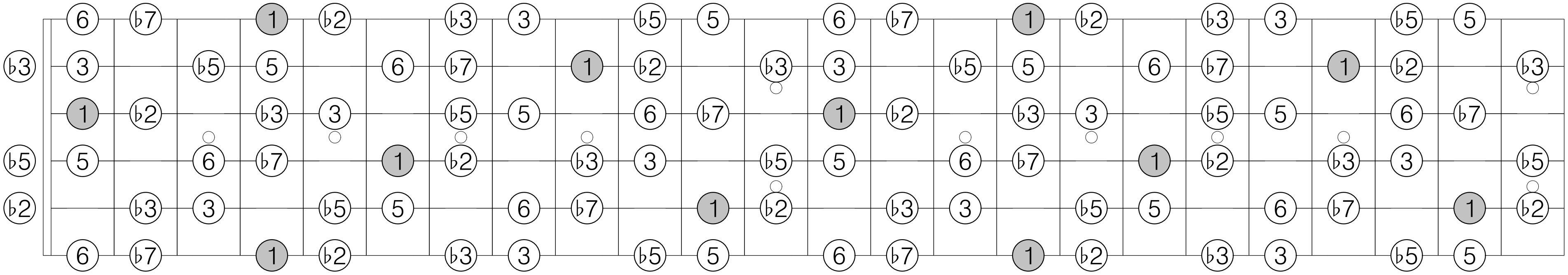

Ab transposition 2 of Mode 2 [1, 2]

1 2 ♭3 4 ♭5 ♭6 6 7 1 2 ♭3 4 ♭5 ♭6 6 7

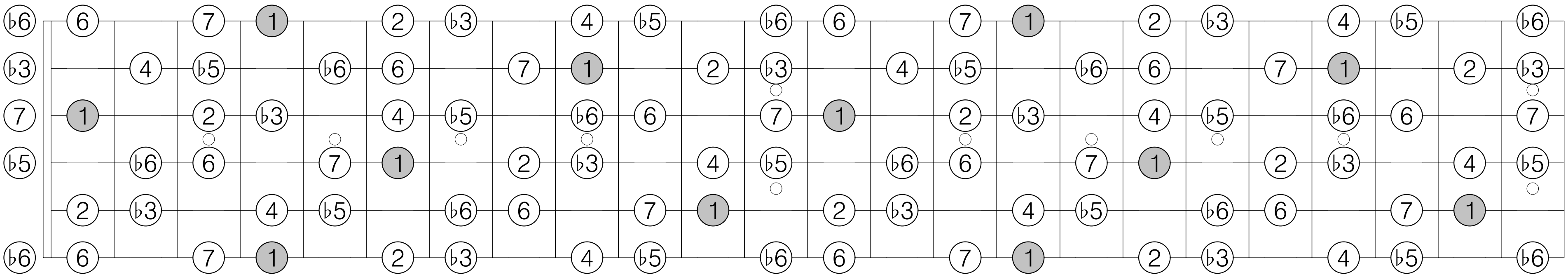

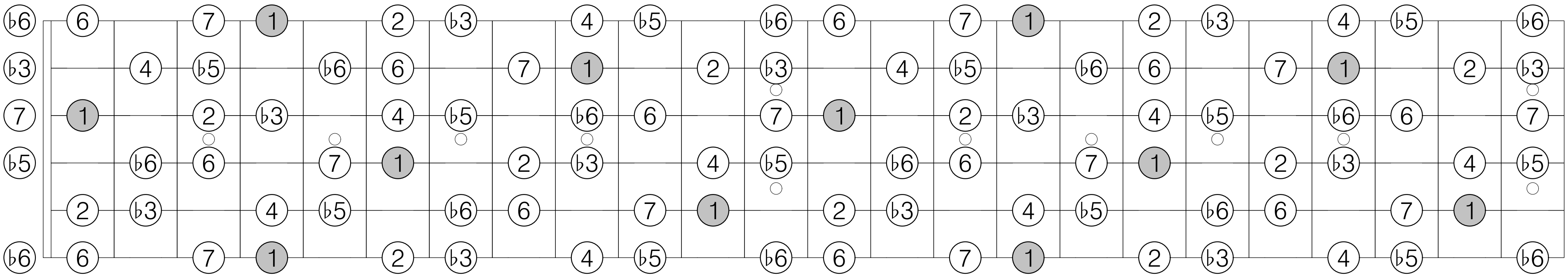

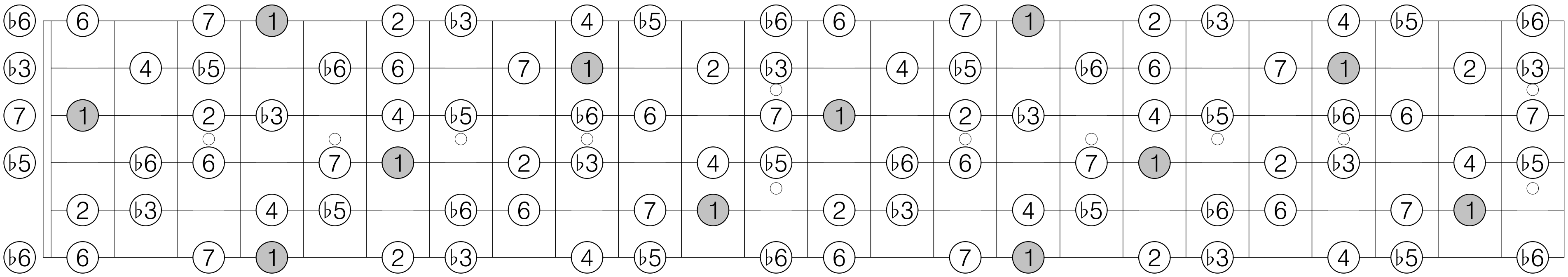

Ab transposition 1 of Mode 3 [1, 1, 2]

1 ♭2 2 3 4 ♭5 ♭6 6 ♭7 1 ♭2 2 3 4 ♭5 ♭6 6 ♭7

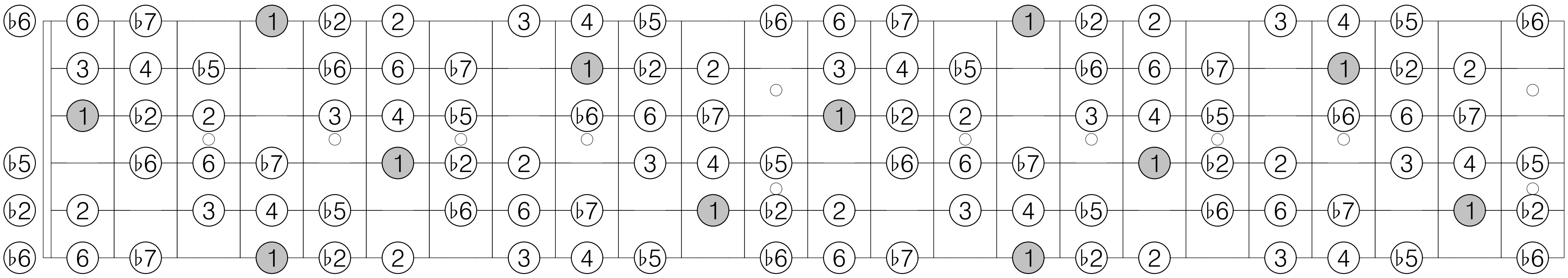

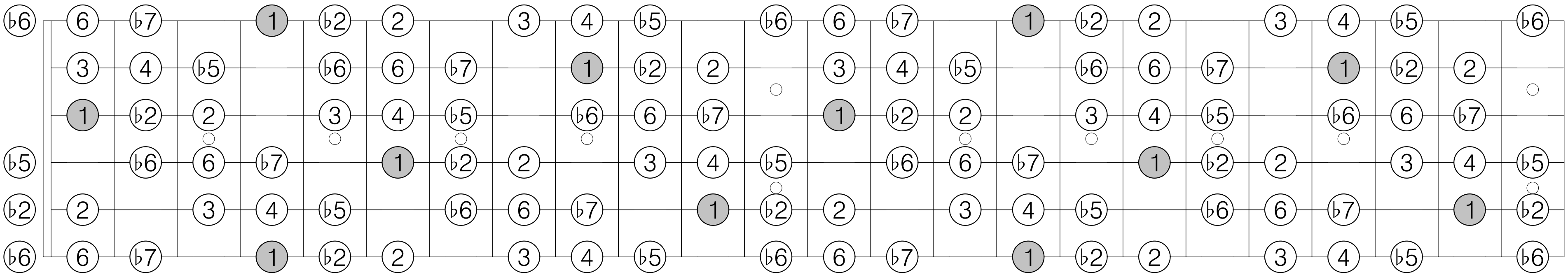

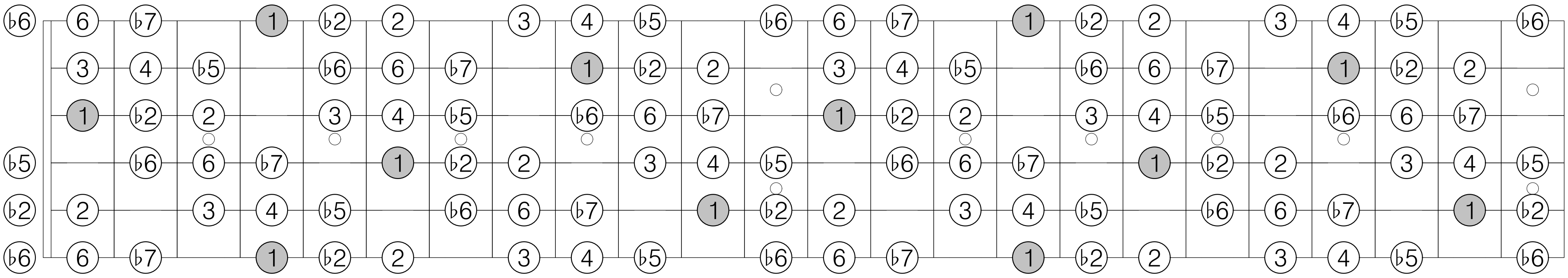

Ab transposition 2 of Mode 3 [1, 1, 2]

1 ♭2 ♭3 3 4 5 ♭6 6 7 1 ♭2 ♭3 3 4 5 ♭6 6 7

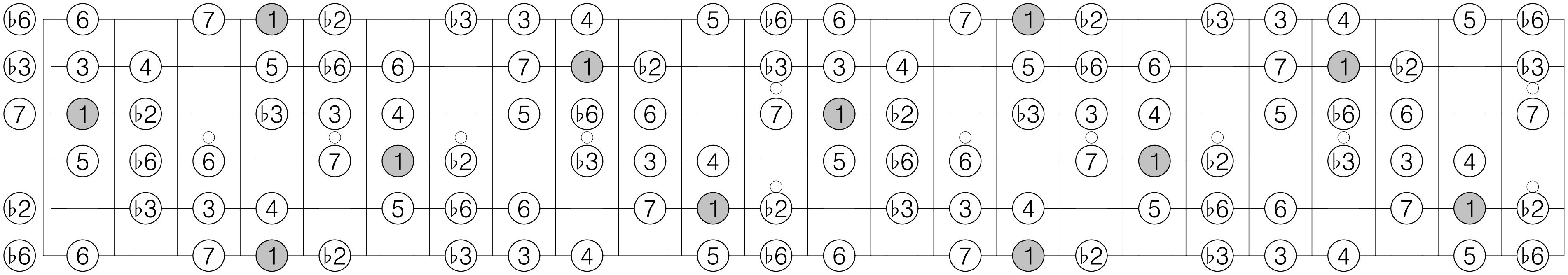

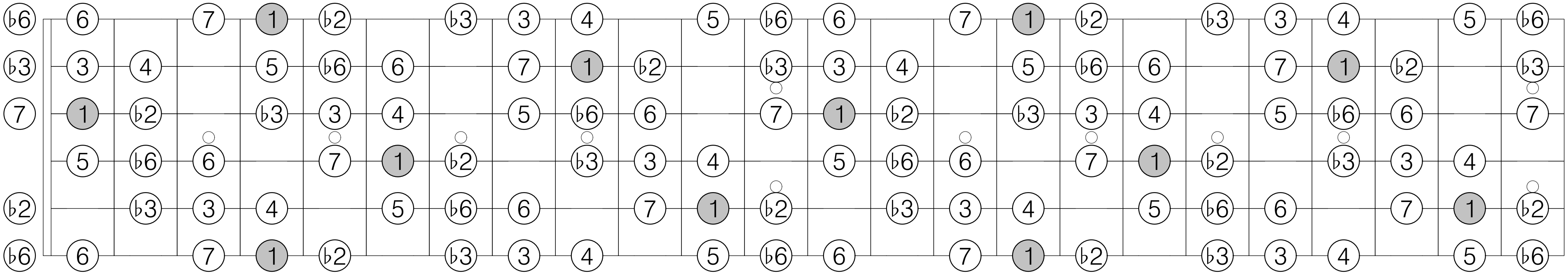

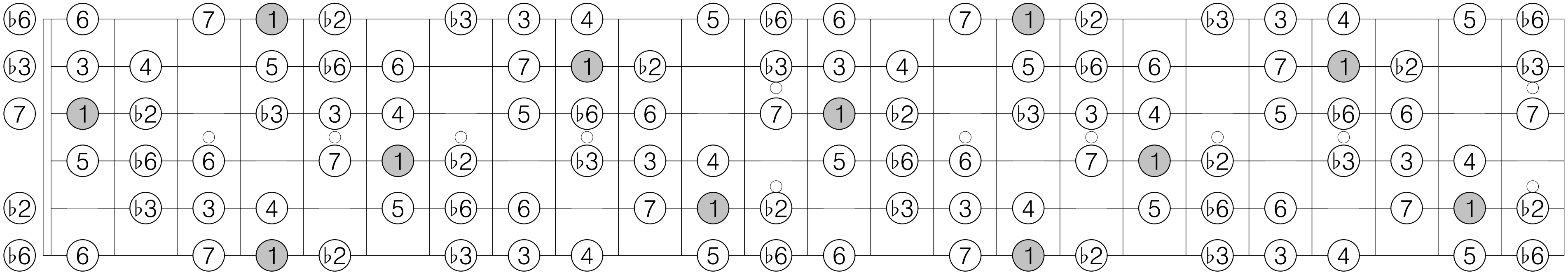

Ab transposition 3 of Mode 3 [1, 1, 2]

1 2 ♭3 3 ♭5 5 ♭6 ♭7 7 1 2 ♭3 3 ♭5 5 ♭6 ♭7 7

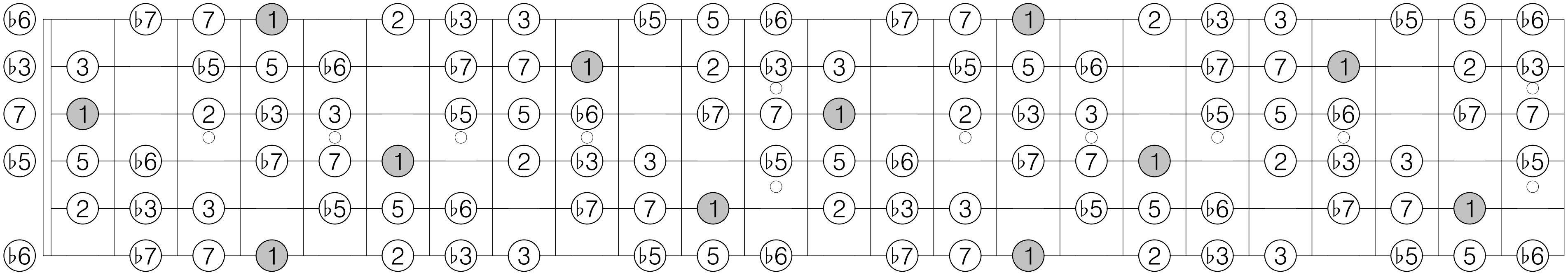

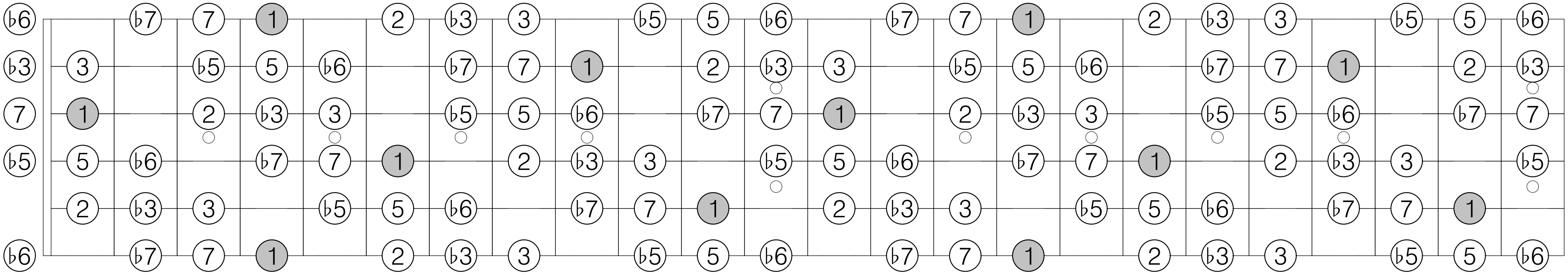

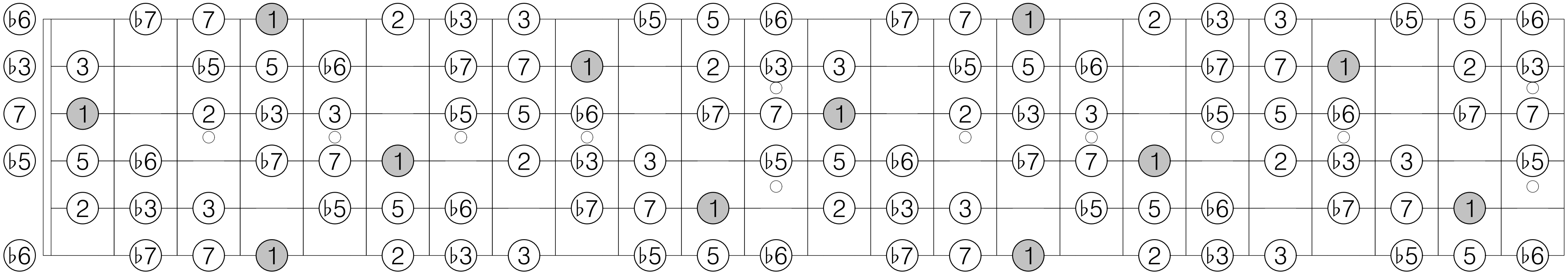

Ab transposition 1 of Mode 4 [1, 1, 3, 1]

1 ♭2 2 4 ♭5 5 ♭6 7 1 ♭2 2 4 ♭5 5 ♭6 7

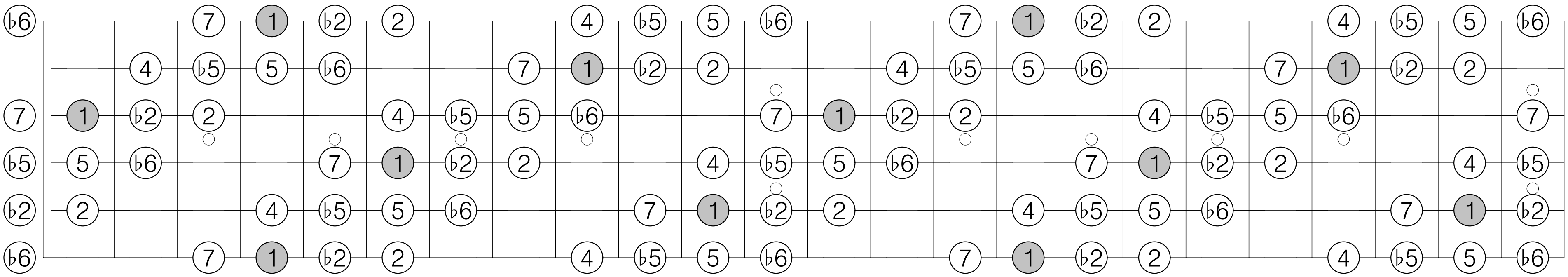

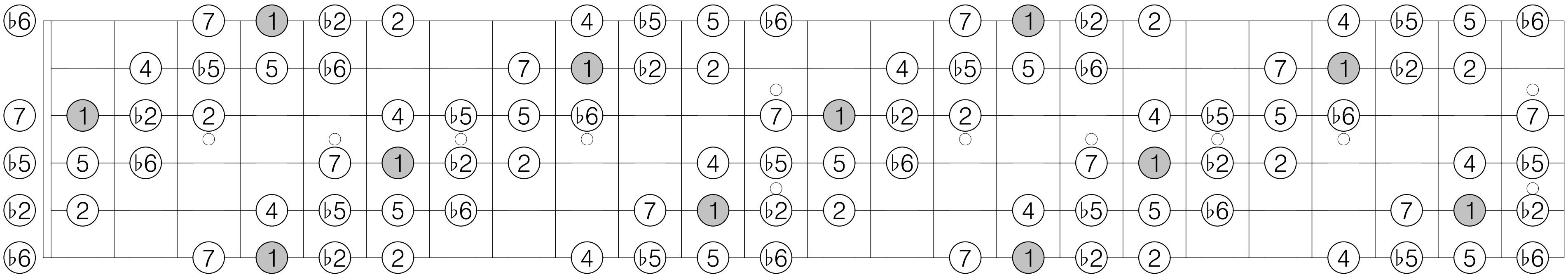

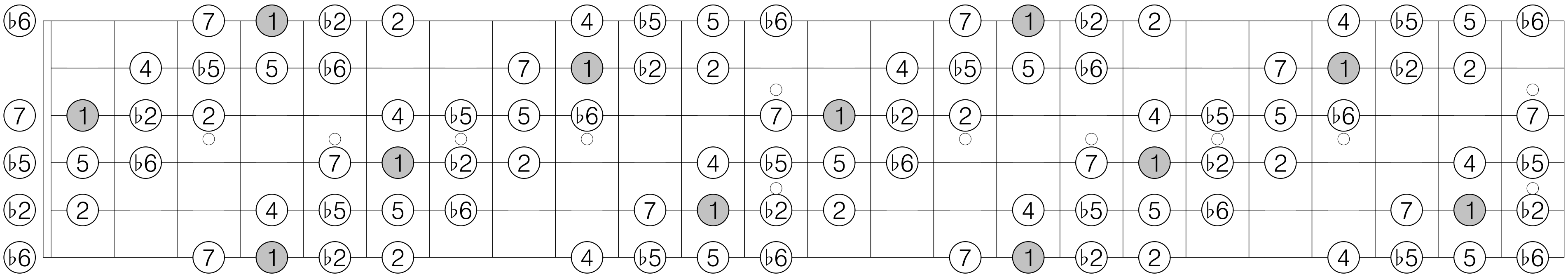

Ab transposition 2 of Mode 4 [1, 1, 3, 1]

1 ♭2 3 4 ♭5 5 ♭7 7 1 ♭2 3 4 ♭5 5 ♭7 7

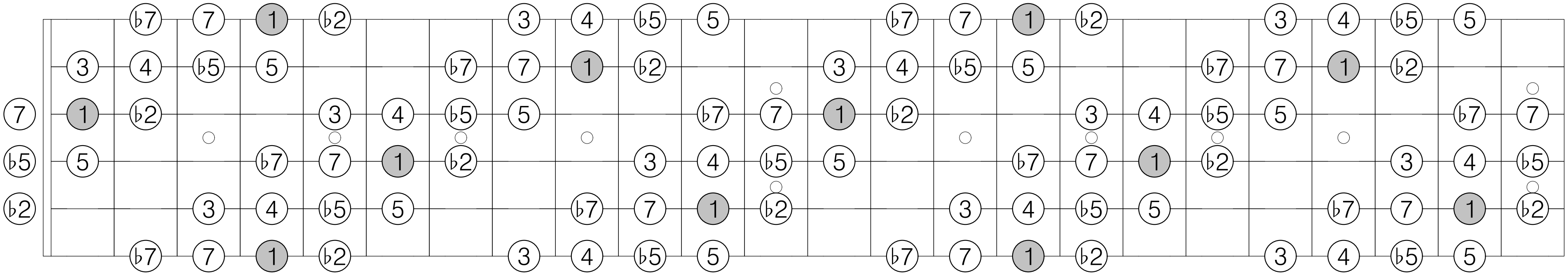

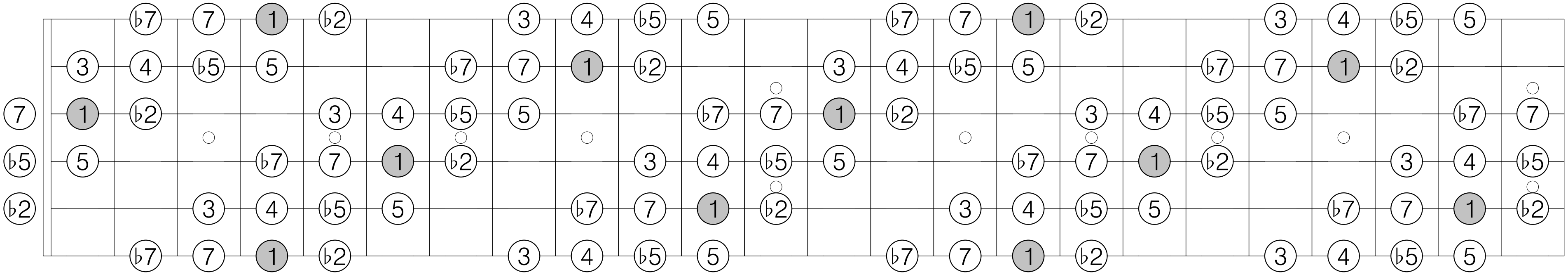

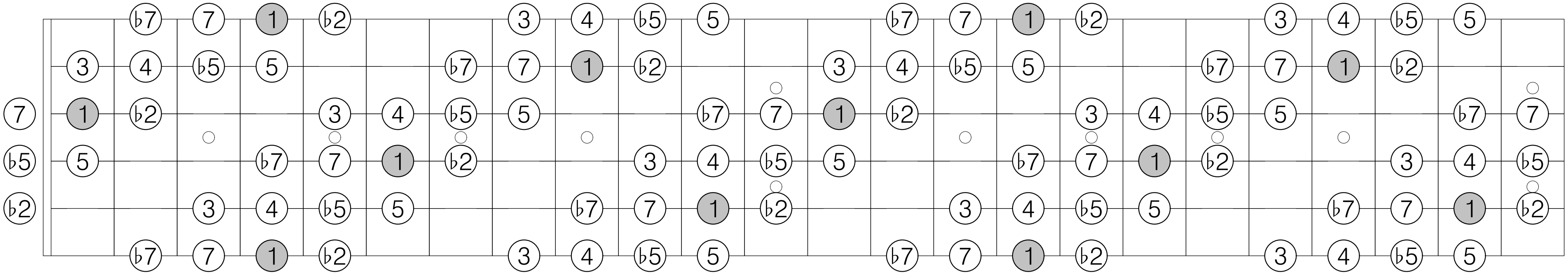

Ab transposition 3 of Mode 4 [1, 1, 3, 1]

1 ♭3 3 4 ♭5 6 ♭7 7 1 ♭3 3 4 ♭5 6 ♭7 7

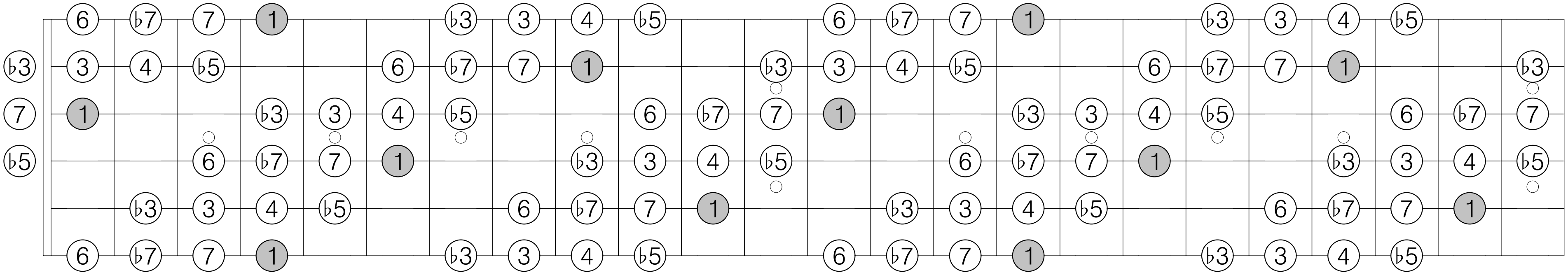

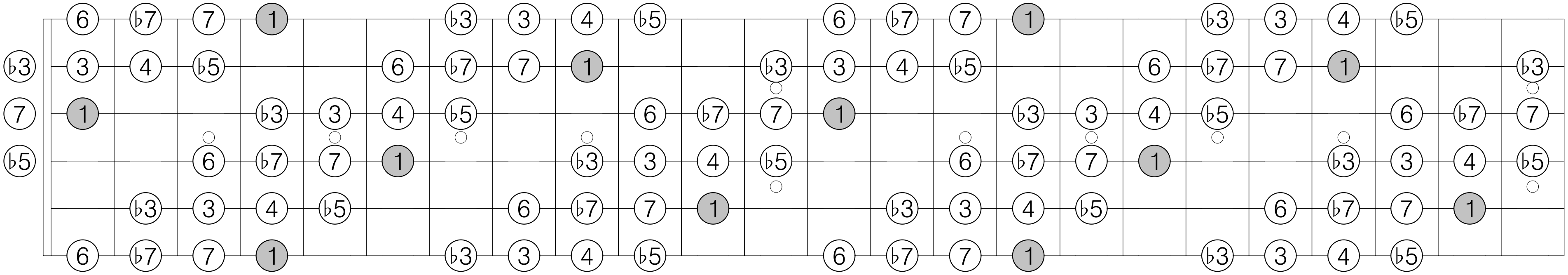

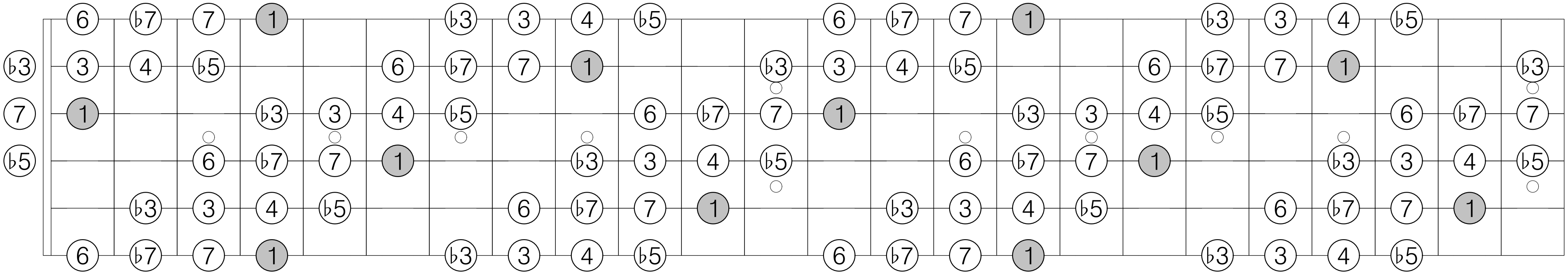

Ab transposition 4 of Mode 4 [1, 1, 3, 1]

1 ♭2 2 ♭3 ♭5 5 ♭6 6 1 ♭2 2 ♭3 ♭5 5 ♭6 6

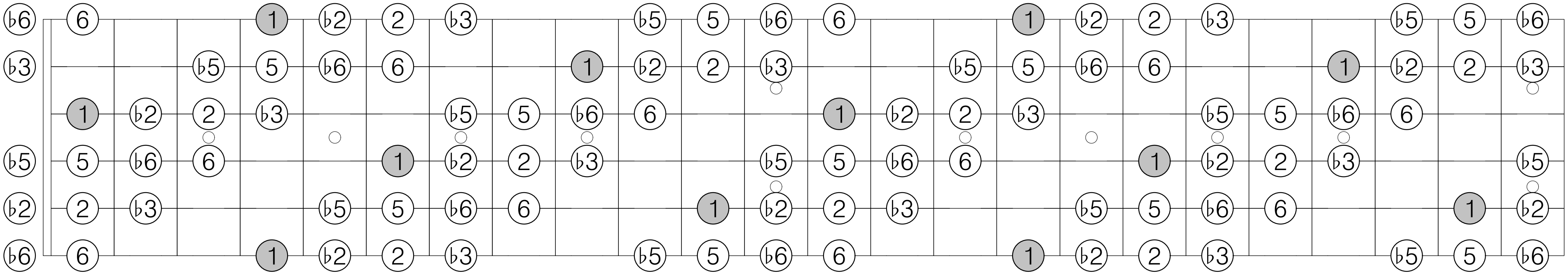

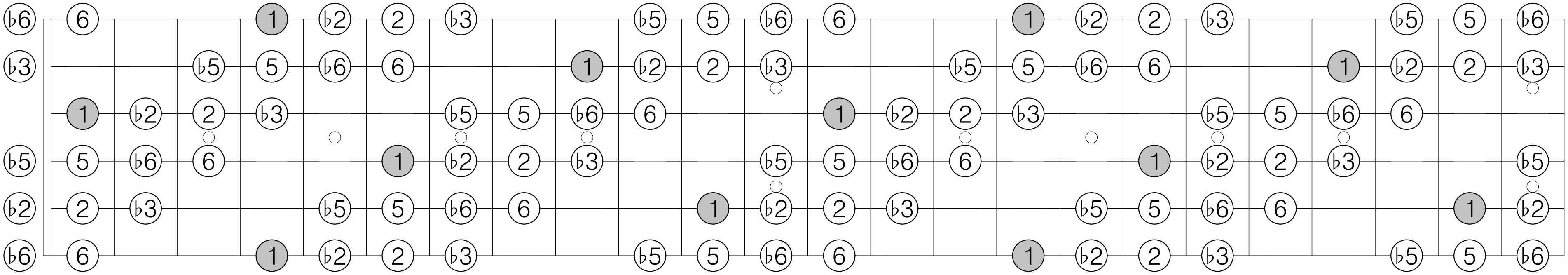

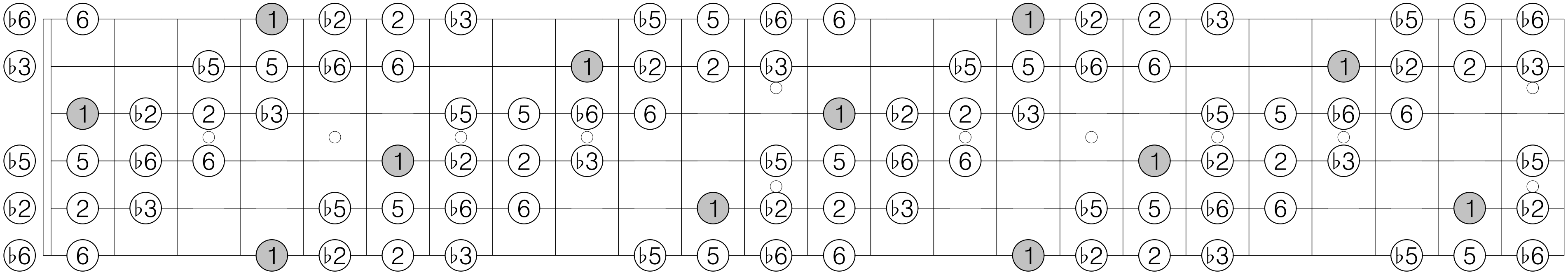

Ab transposition 1 of Mode 5 [1, 4, 1]

1 ♭2 4 ♭5 5 7 1 ♭2 4 ♭5 5 7

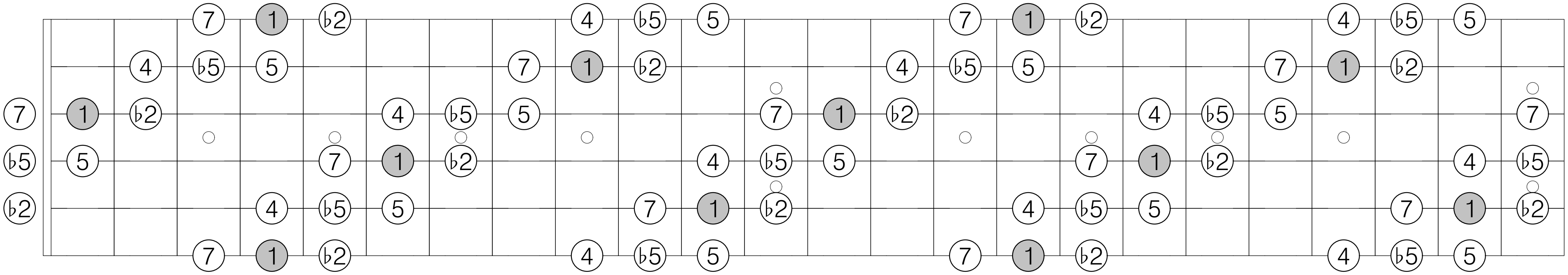

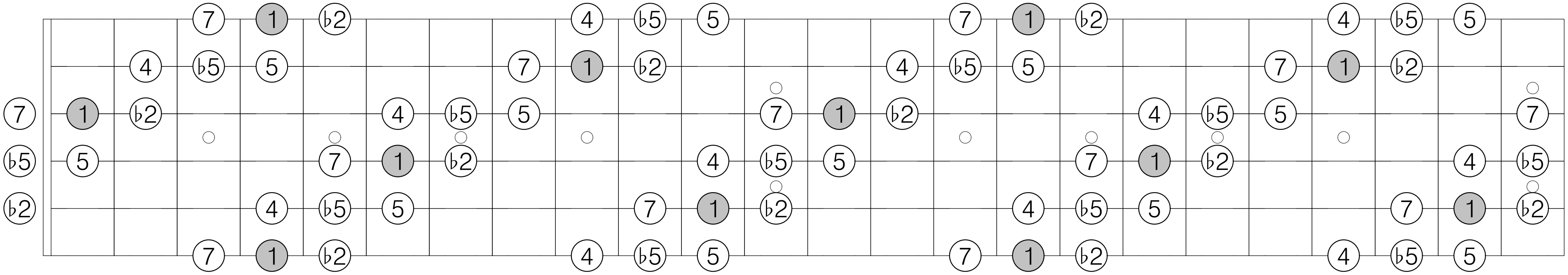

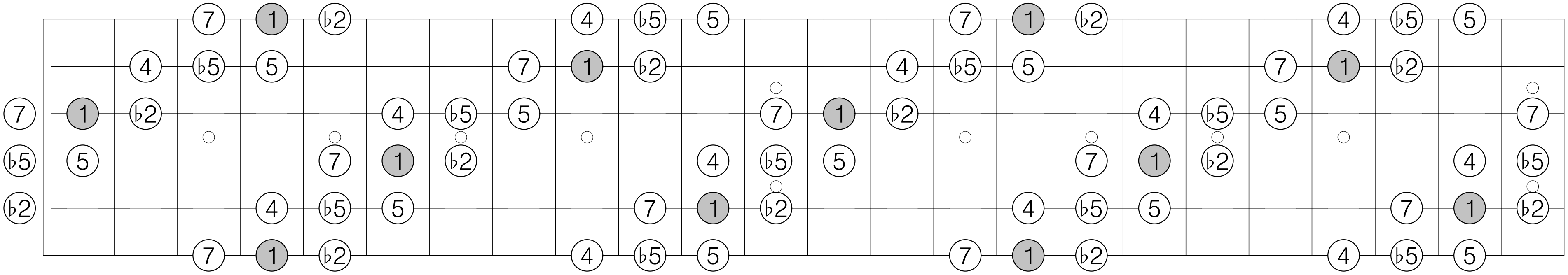

Ab transposition 2 of Mode 5 [1, 4, 1]

1 3 4 ♭5 ♭7 7 1 3 4 ♭5 ♭7 7

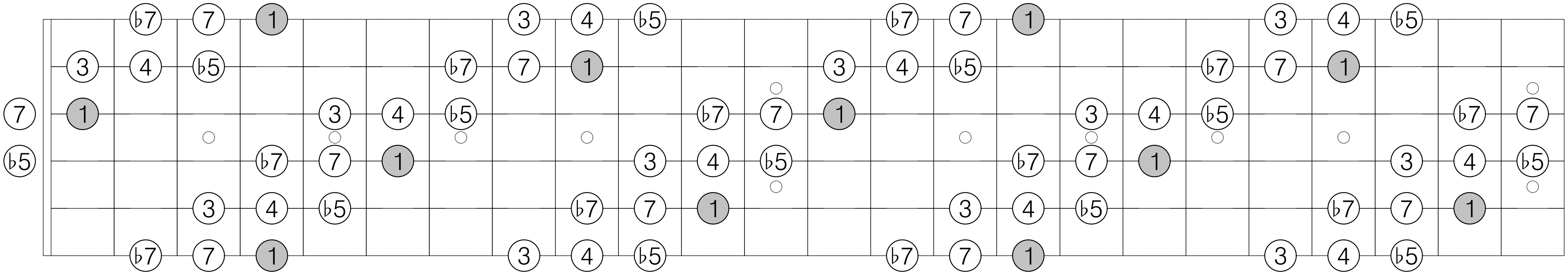

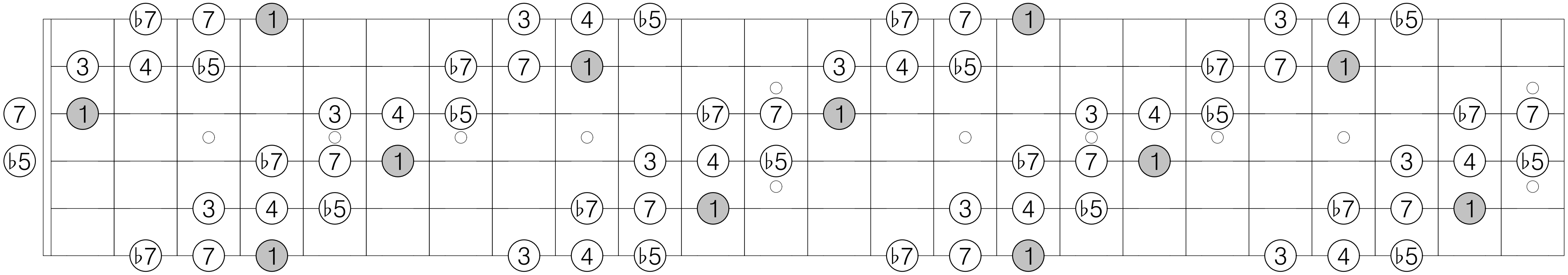

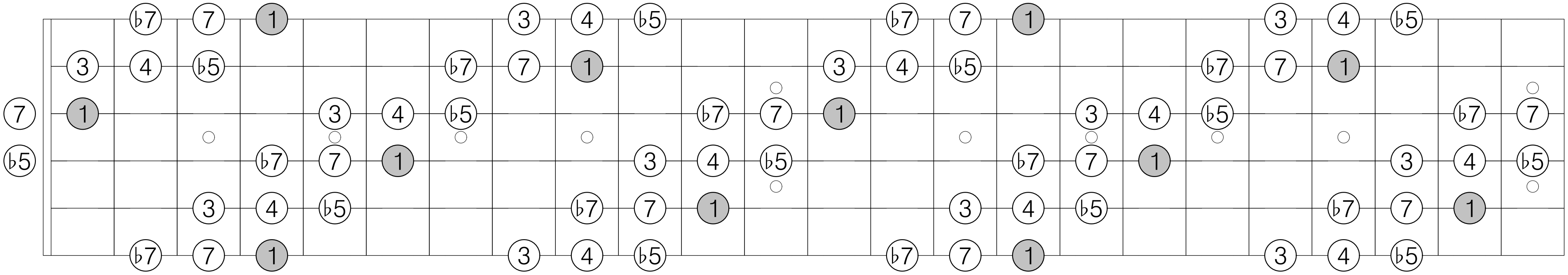

Ab transposition 3 of Mode 5 [1, 4, 1]

1 ♭2 2 ♭5 5 ♭6 1 ♭2 2 ♭5 5 ♭6

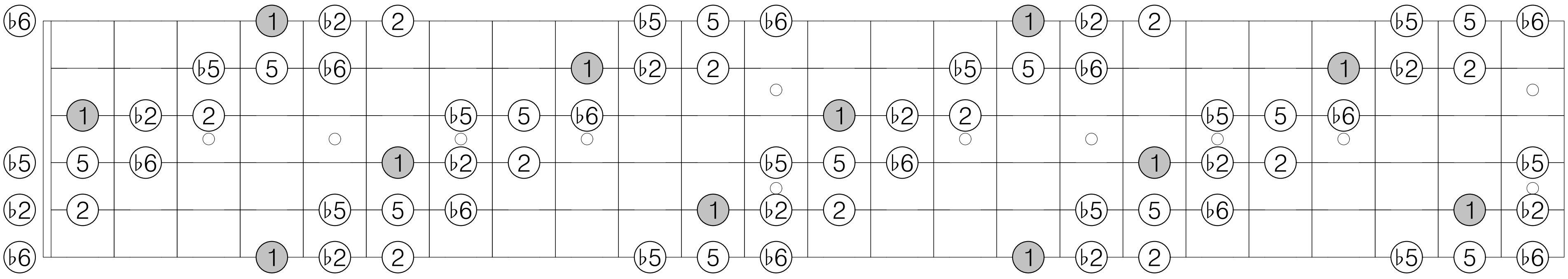

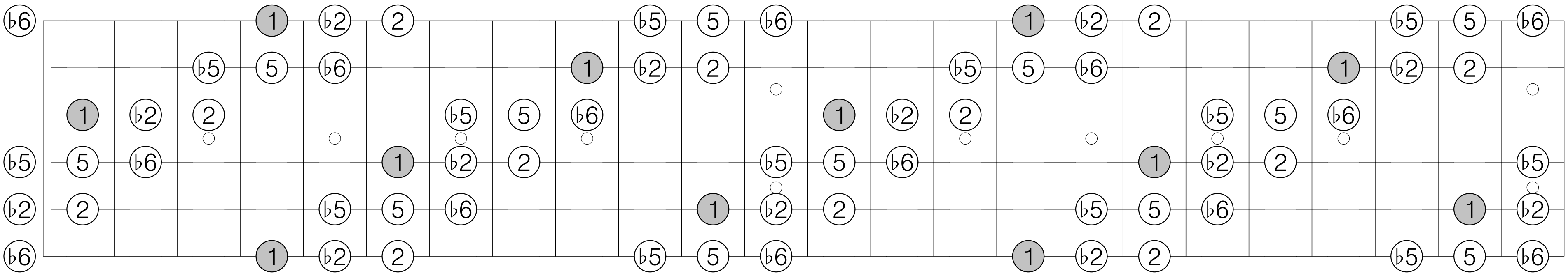

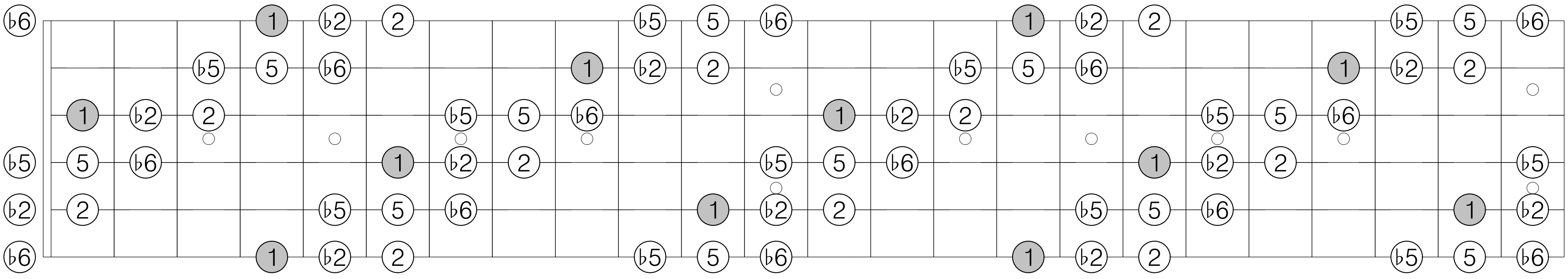

Ab transposition 1 of Mode 6 [1, 1, 2, 2]

1 ♭2 2 3 ♭5 5 ♭6 ♭7 1 ♭2 2 3 ♭5 5 ♭6 ♭7

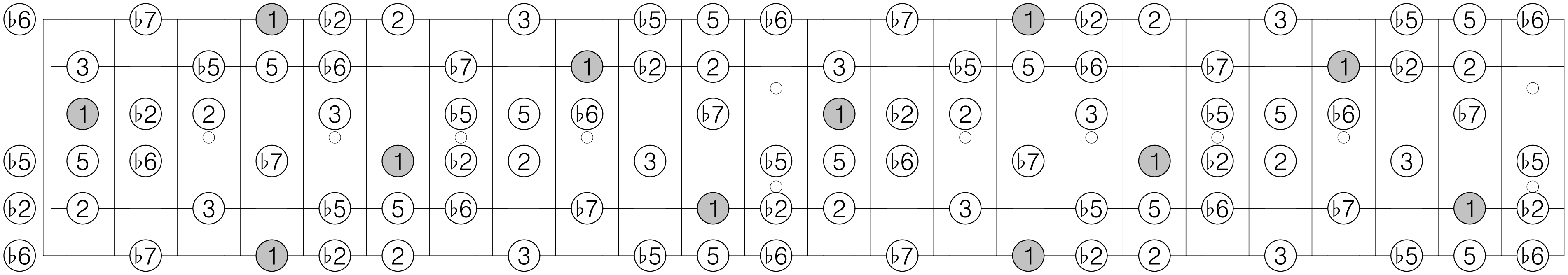

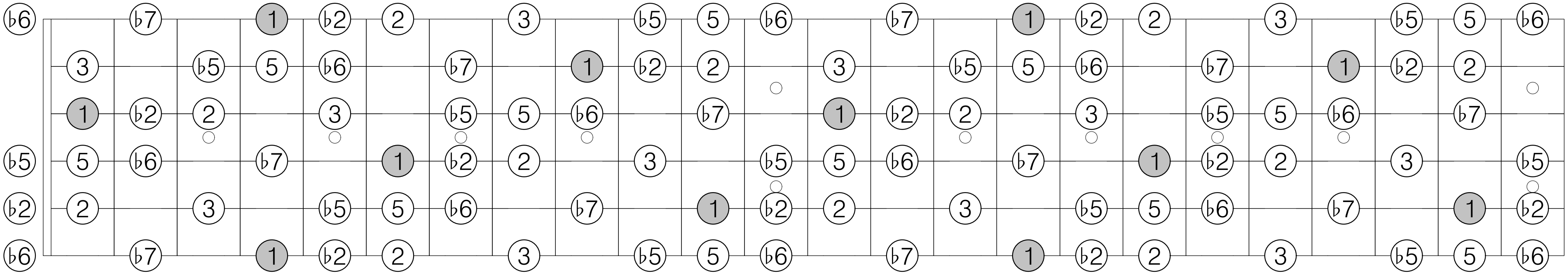

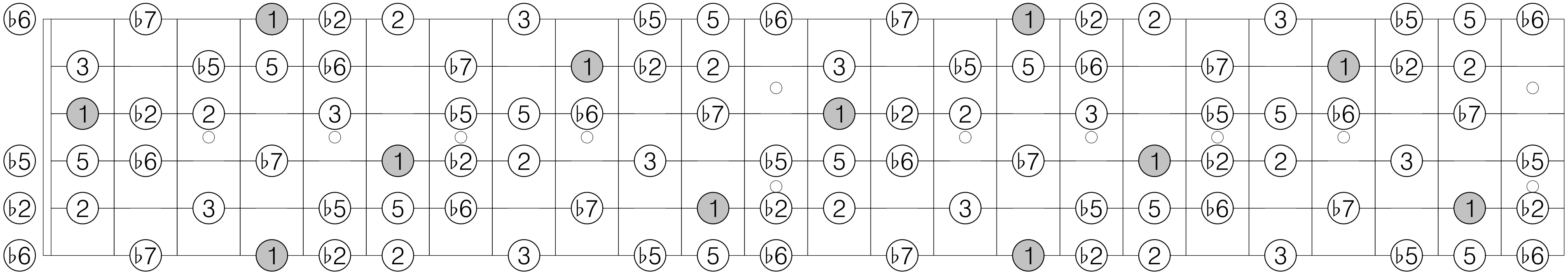

Ab transposition 2 of Mode 6 [1, 1, 2, 2]

1 ♭2 ♭3 4 ♭5 5 6 7 1 ♭2 ♭3 4 ♭5 5 6 7

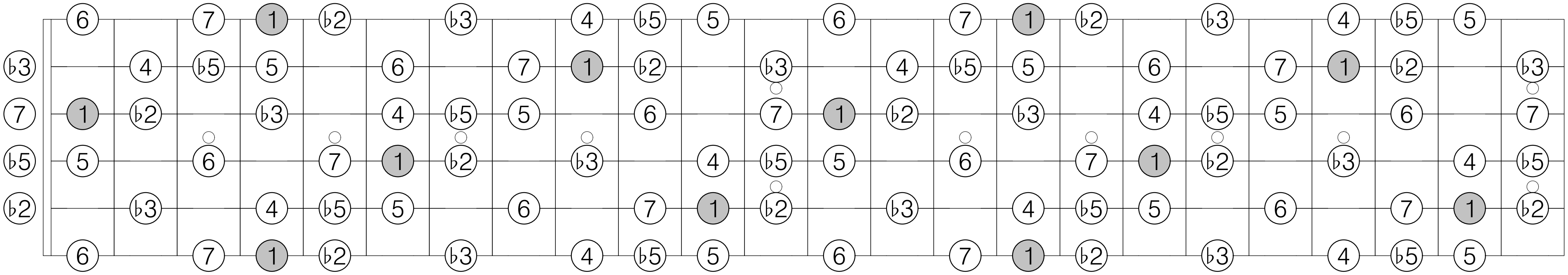

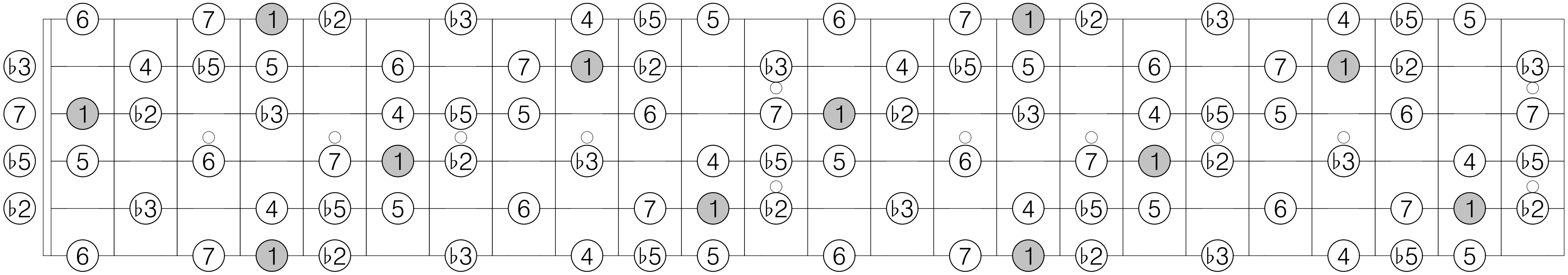

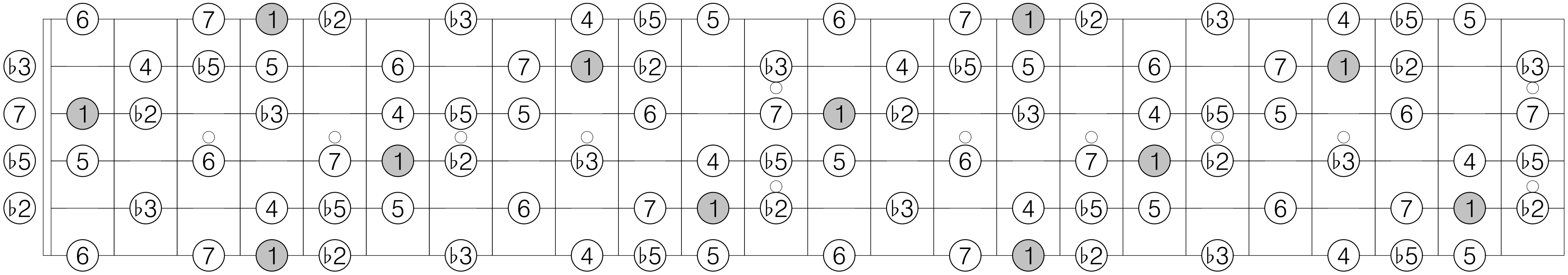

Ab transposition 3 of Mode 6 [1, 1, 2, 2]

1 2 3 4 ♭5 ♭6 ♭7 7 1 2 3 4 ♭5 ♭6 ♭7 7

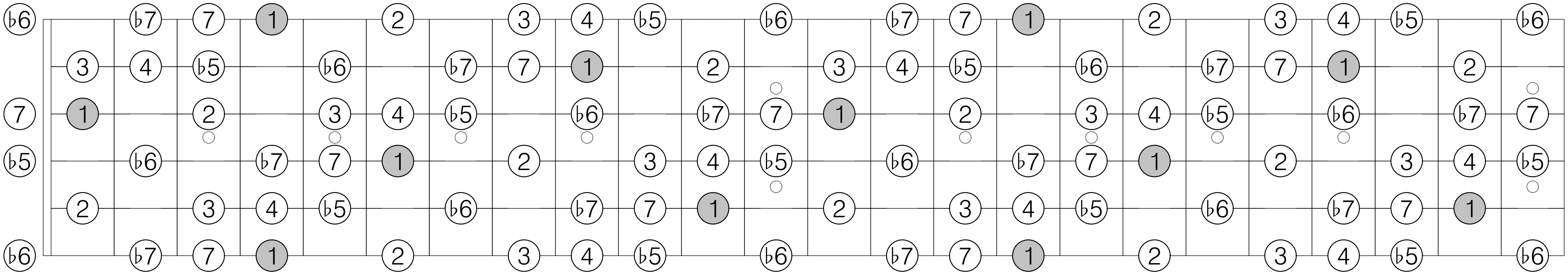

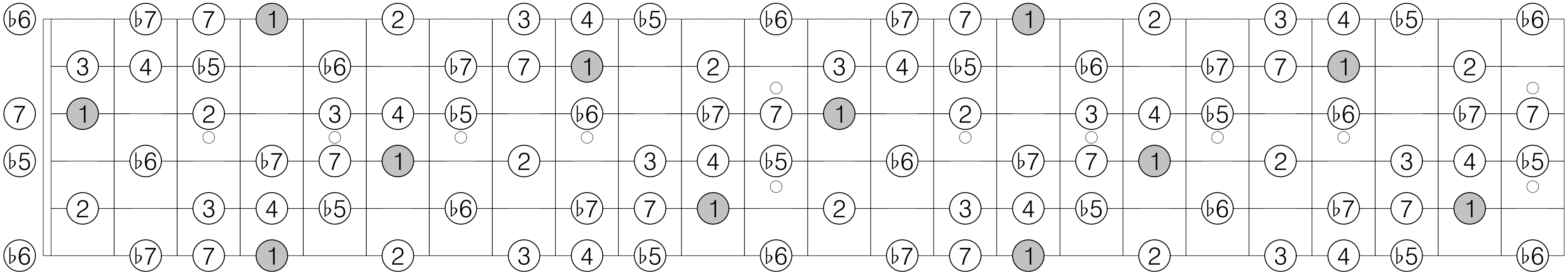

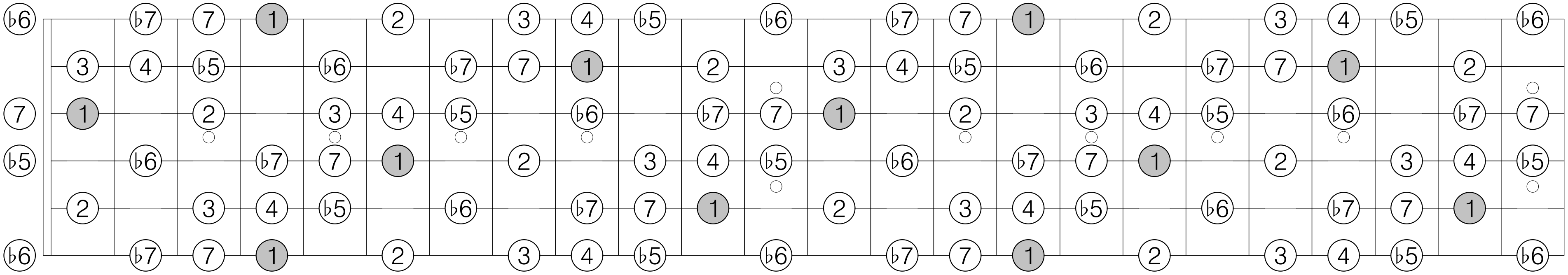

Ab transposition 4 of Mode 6 [1, 1, 2, 2]

1 2 ♭3 3 ♭5 ♭6 6 ♭7 1 2 ♭3 3 ♭5 ♭6 6 ♭7

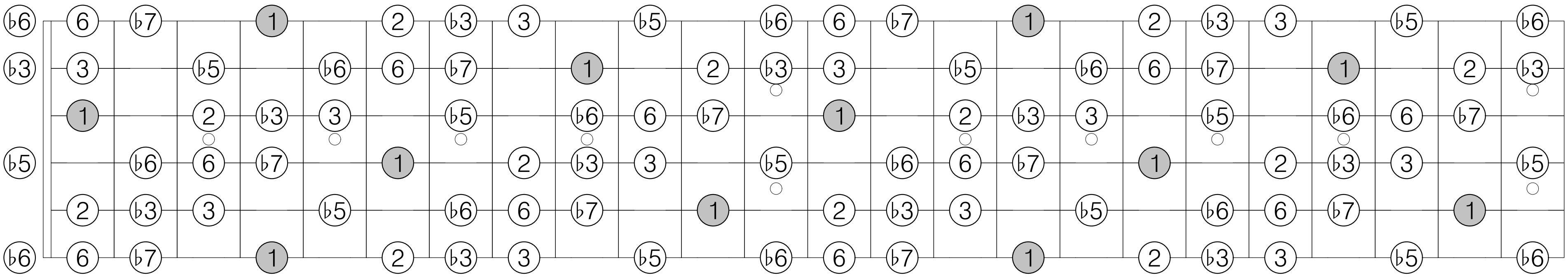

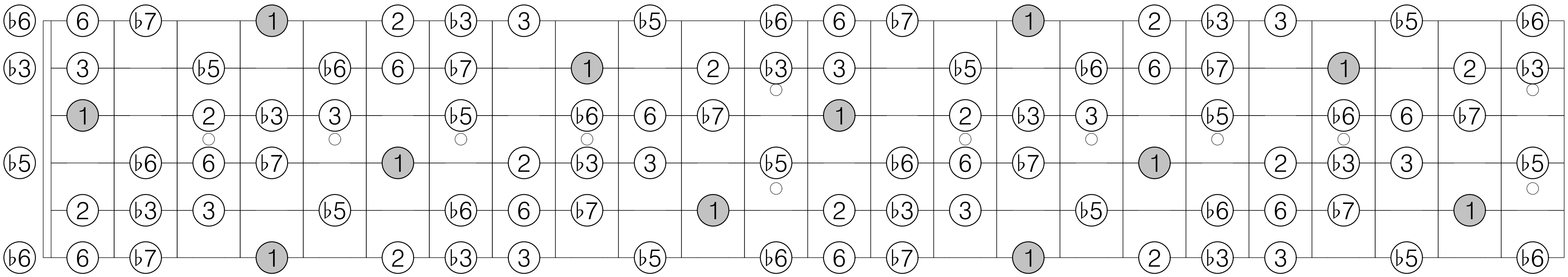

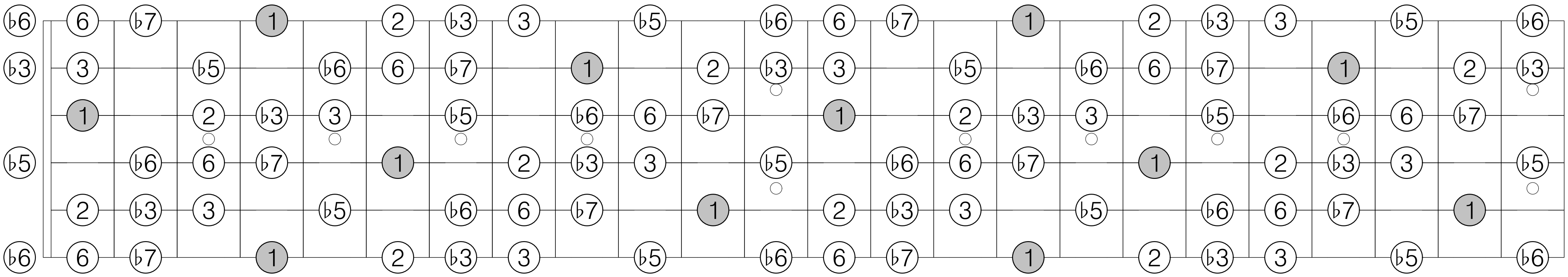

Ab transposition 1 of Mode 7 [1, 1, 1, 2, 1]

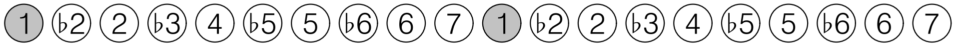

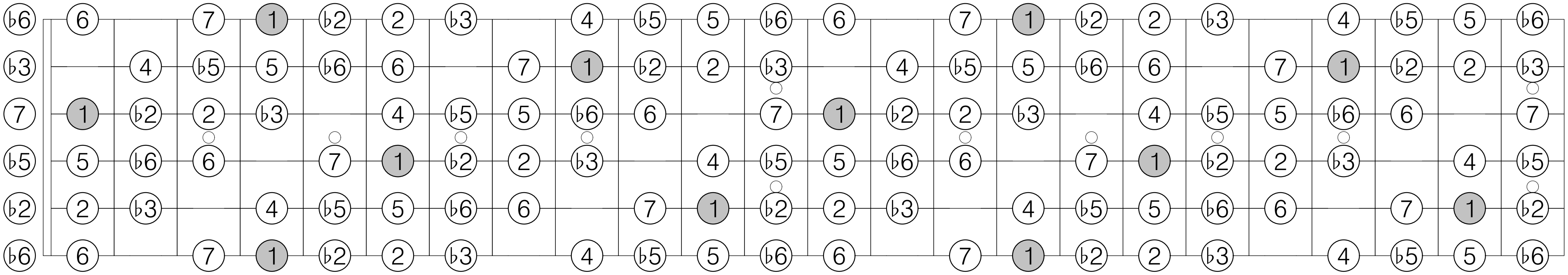

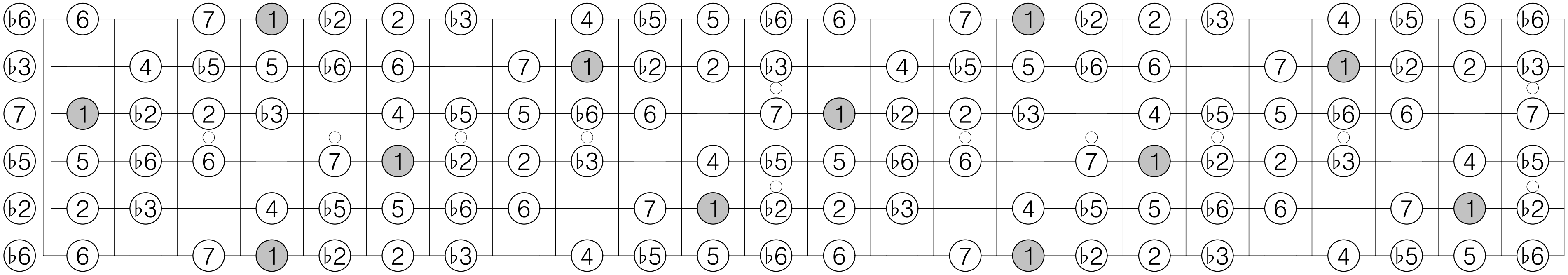

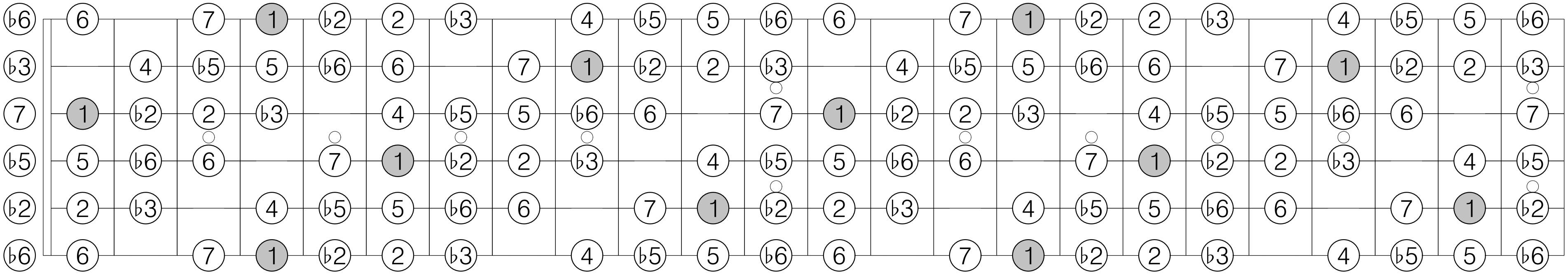

Ab transposition 2 of Mode 7 [1, 1, 1, 2, 1]

1 ♭2 2 3 4 ♭5 5 ♭6 ♭7 7 1 ♭2 2 3 4 ♭5 5 ♭6 ♭7 7

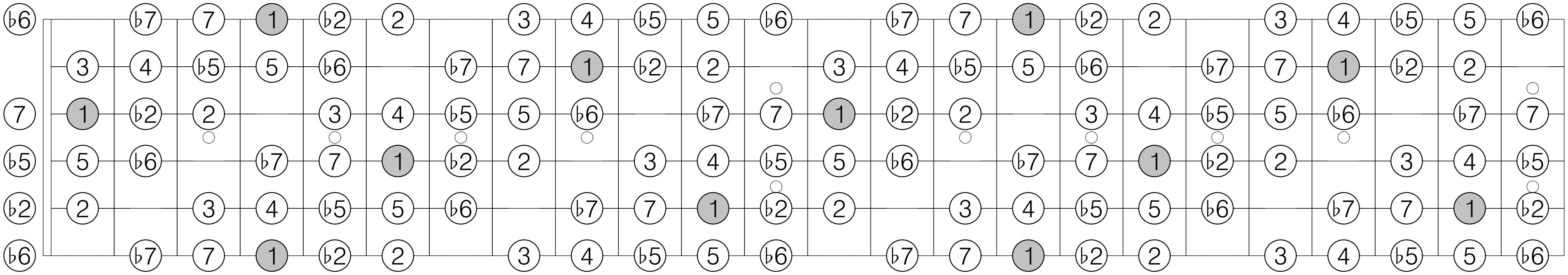

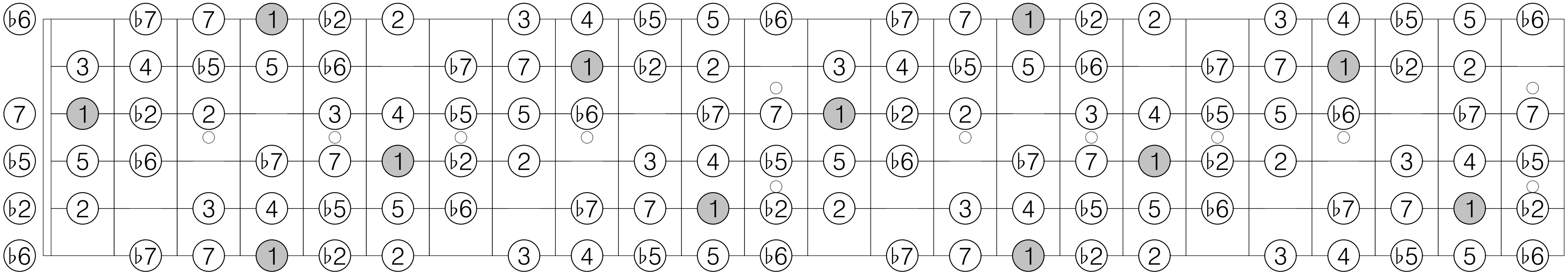

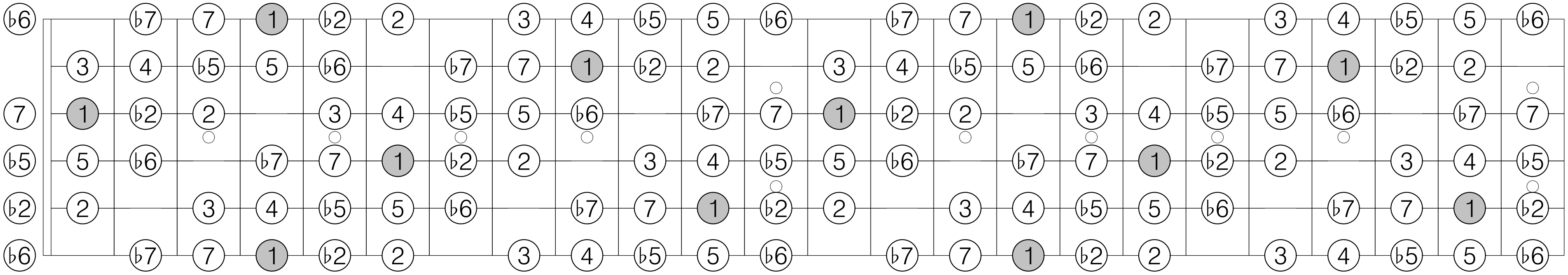

Ab transposition 3 of Mode 7 [1, 1, 1, 2, 1]

1 ♭2 ♭3 3 4 ♭5 5 6 ♭7 7 1 ♭2 ♭3 3 4 ♭5 5 6 ♭7 7

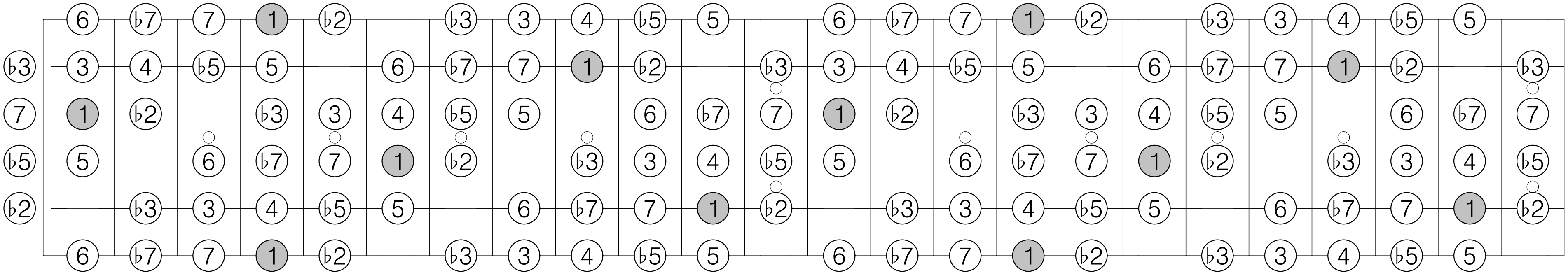

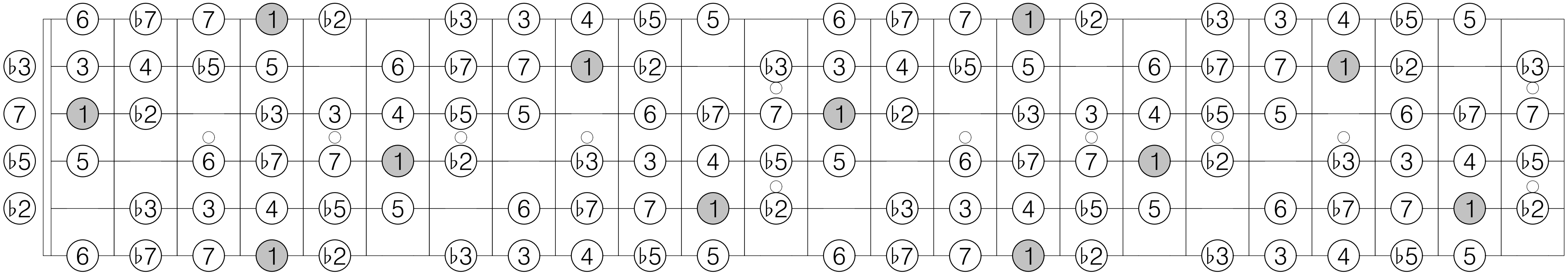

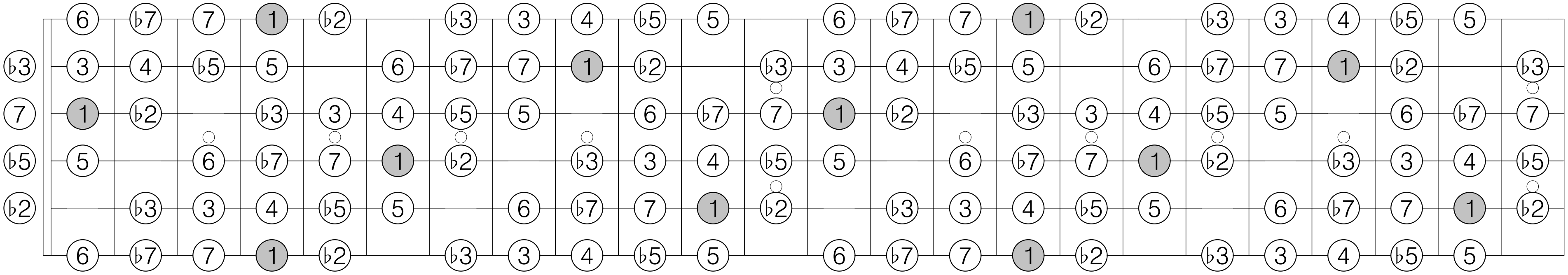

Ab transposition 4 of Mode 7 [1, 1, 1, 2, 1]

1 2 ♭3 3 4 ♭5 ♭6 6 ♭7 7 1 2 ♭3 3 4 ♭5 ♭6 6 ♭7 7

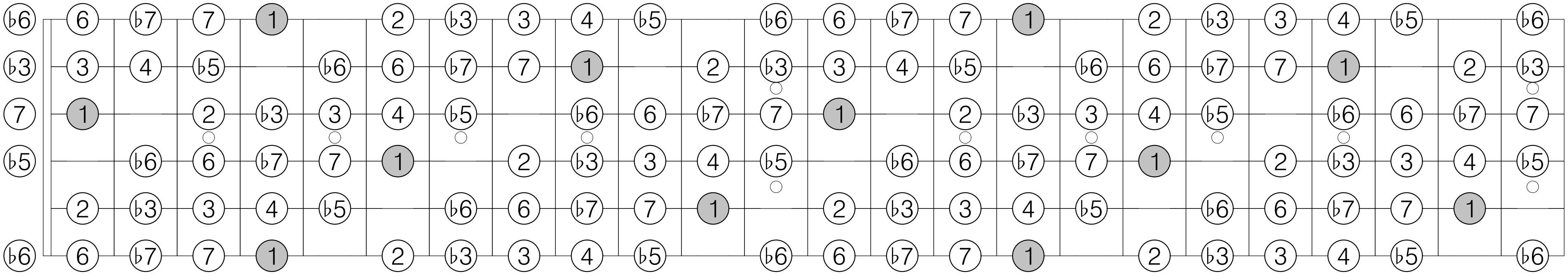

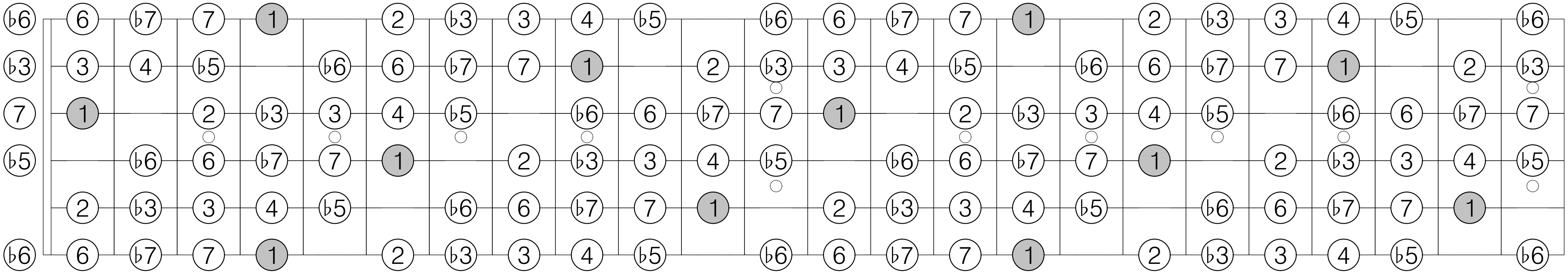

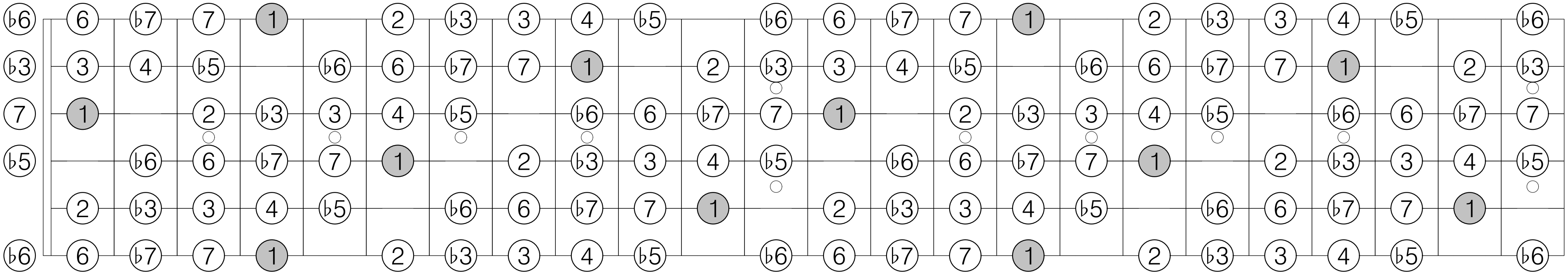

Ab transposition 5 of Mode 7 [1, 1, 1, 2, 1]

1 ♭2 2 ♭3 3 ♭5 5 ♭6 6 ♭7 1 ♭2 2 ♭3 3 ♭5 5 ♭6 6 ♭7

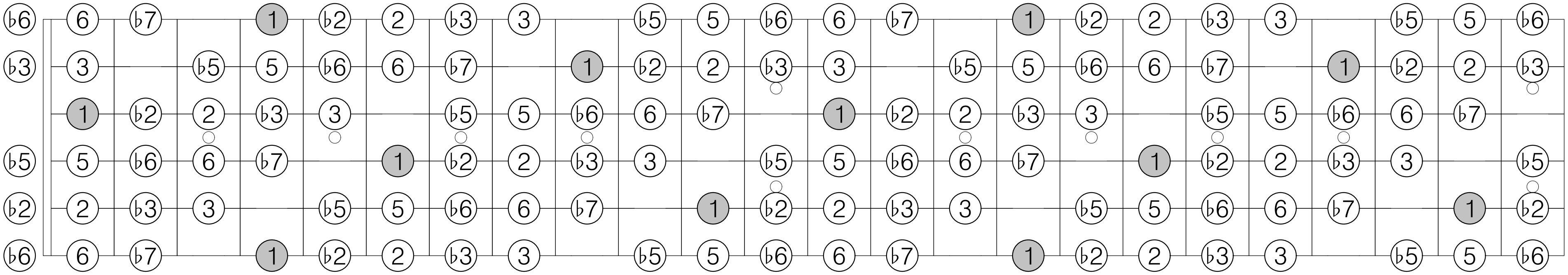

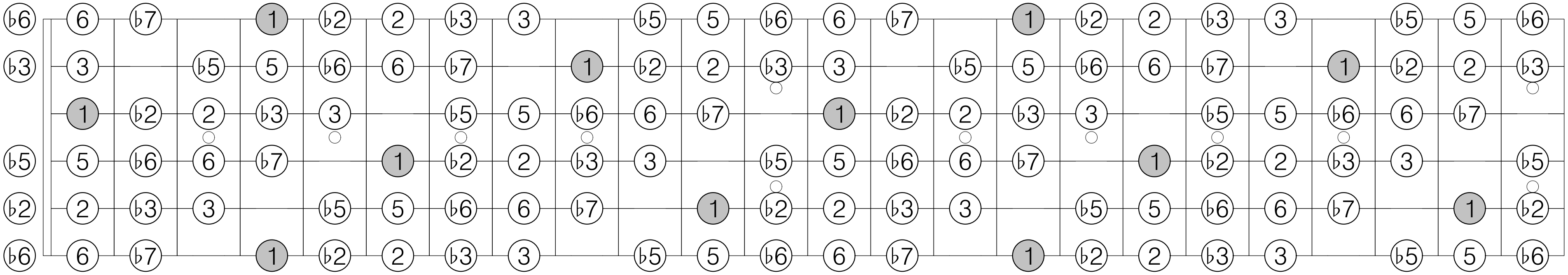

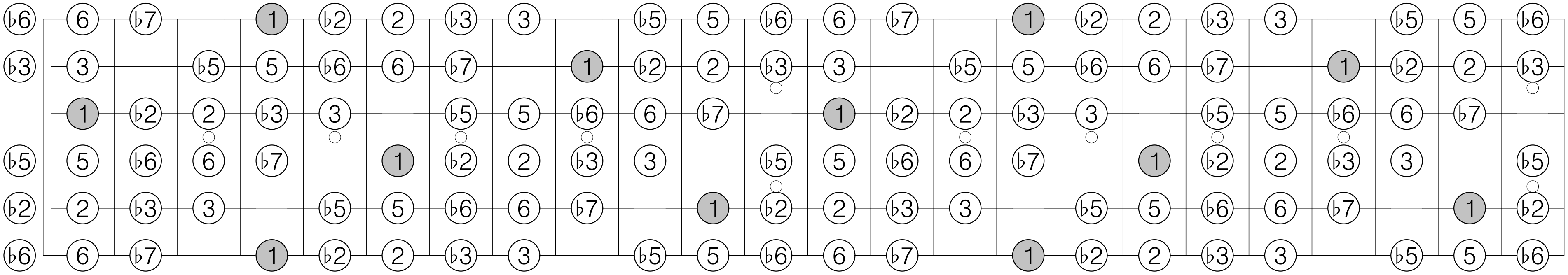

A transposition 1 of Mode 1 [2]

1 2 3 ♭5 ♭6 ♭7 1 2 3 ♭5 ♭6 ♭7

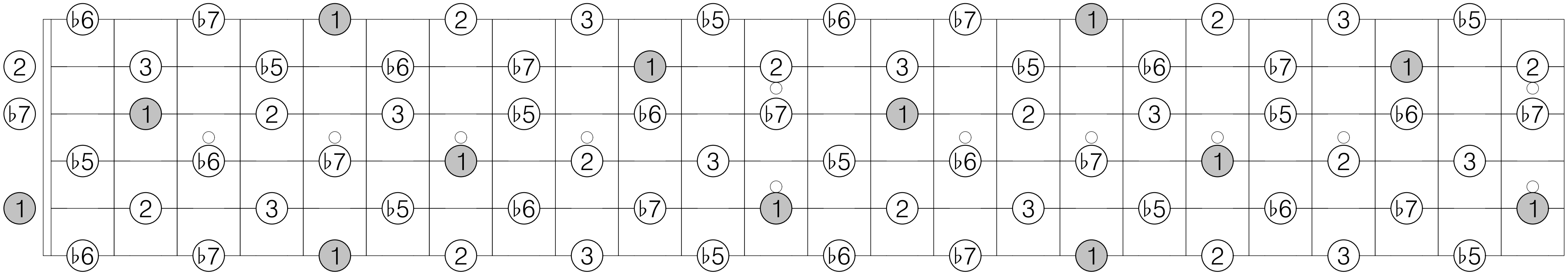

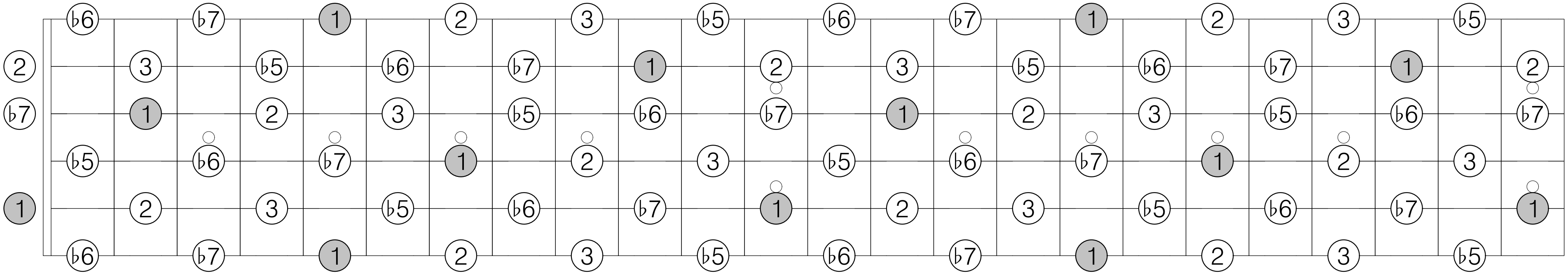

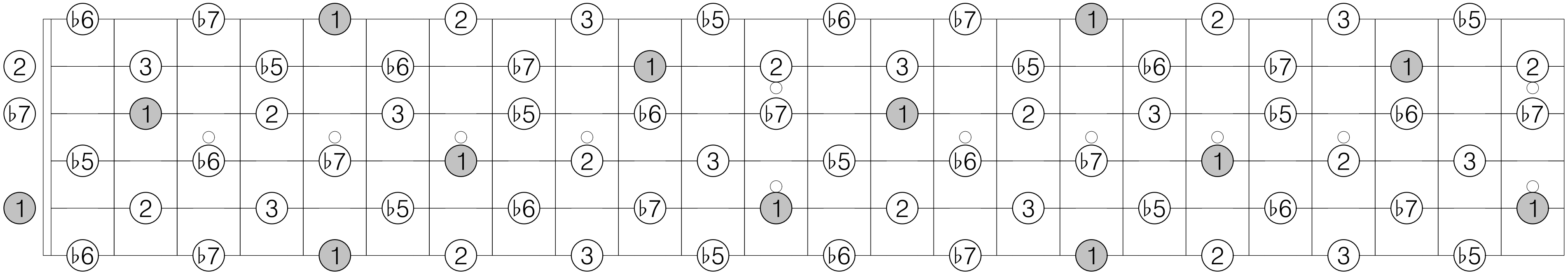

A transposition 1 of Mode 2 [1, 2]

1 ♭2 ♭3 3 ♭5 5 6 ♭7 1 ♭2 ♭3 3 ♭5 5 6 ♭7

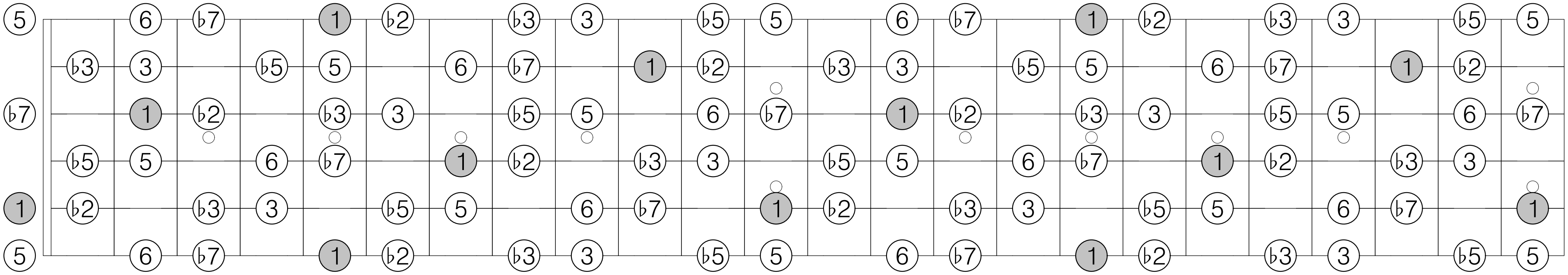

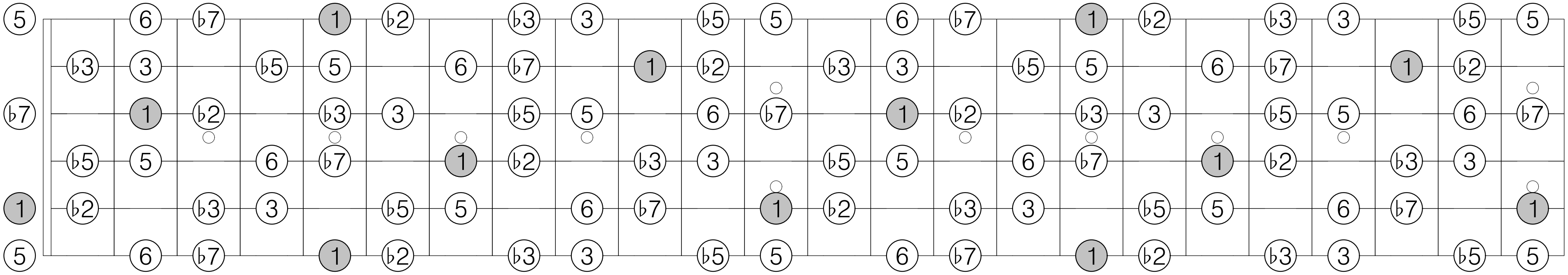

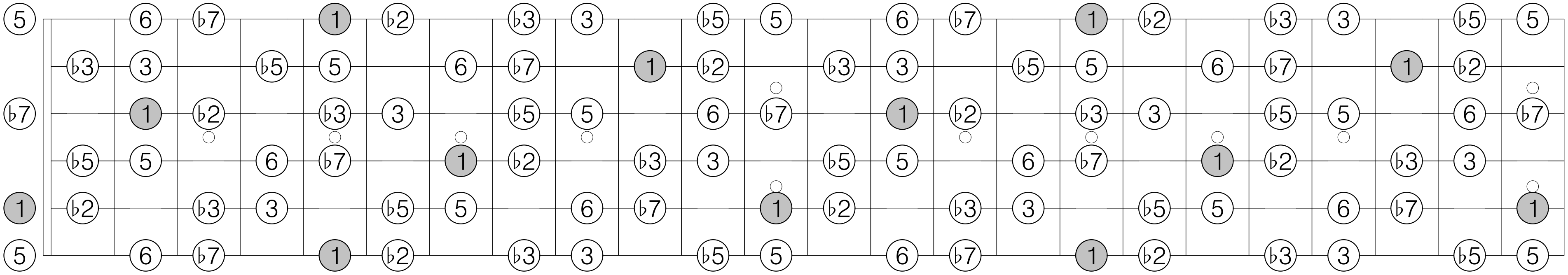

A transposition 2 of Mode 2 [1, 2]

1 2 ♭3 4 ♭5 ♭6 6 7 1 2 ♭3 4 ♭5 ♭6 6 7

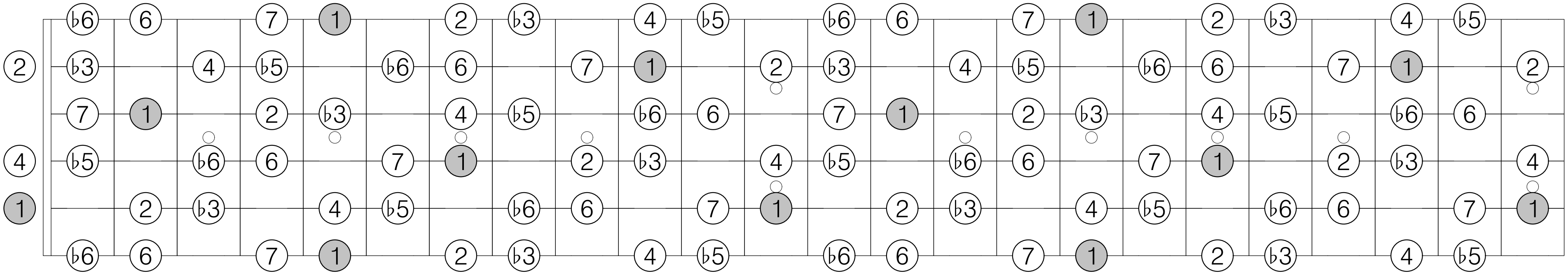

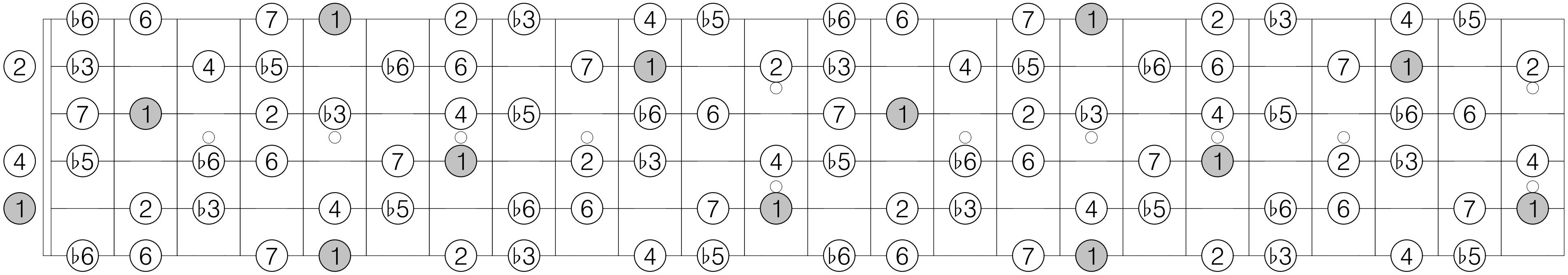

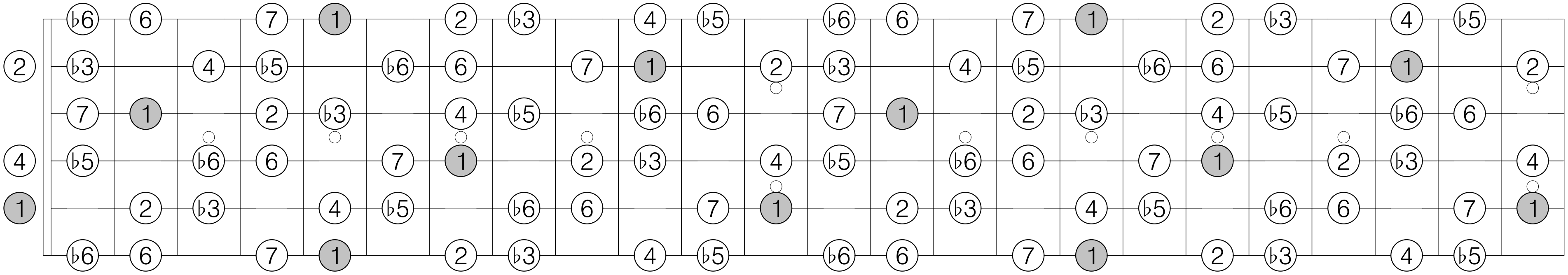

A transposition 1 of Mode 3 [1, 1, 2]

1 ♭2 2 3 4 ♭5 ♭6 6 ♭7 1 ♭2 2 3 4 ♭5 ♭6 6 ♭7

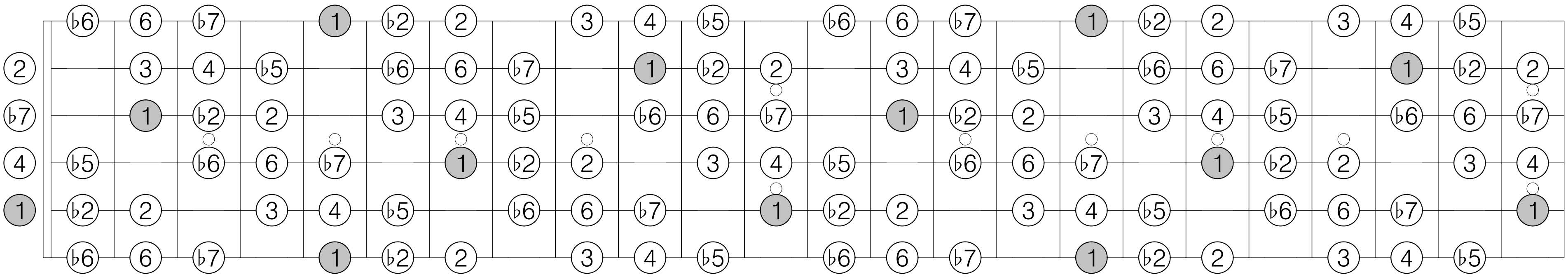

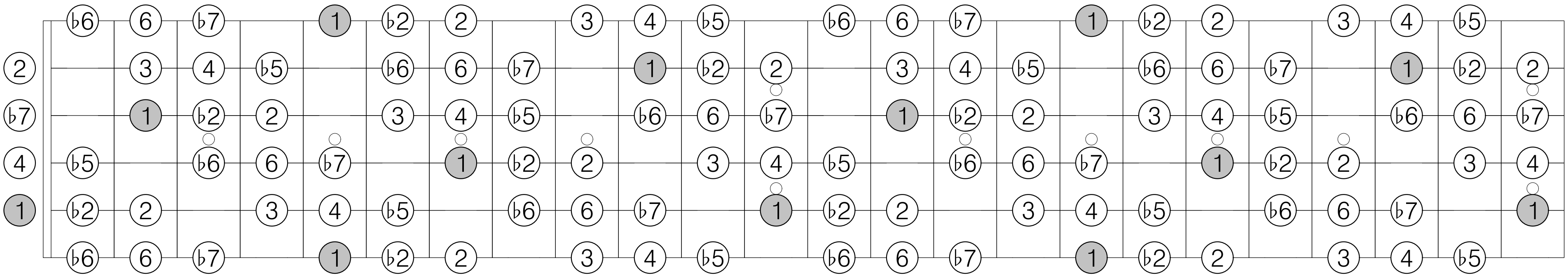

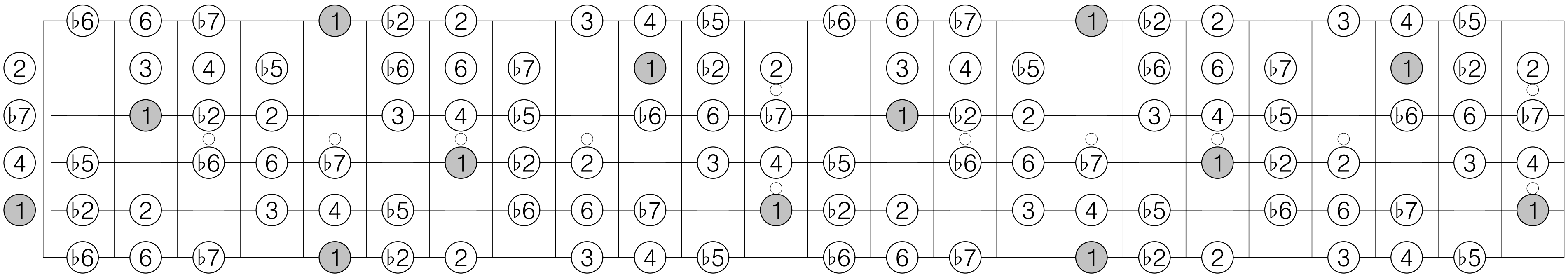

A transposition 2 of Mode 3 [1, 1, 2]

1 ♭2 ♭3 3 4 5 ♭6 6 7 1 ♭2 ♭3 3 4 5 ♭6 6 7

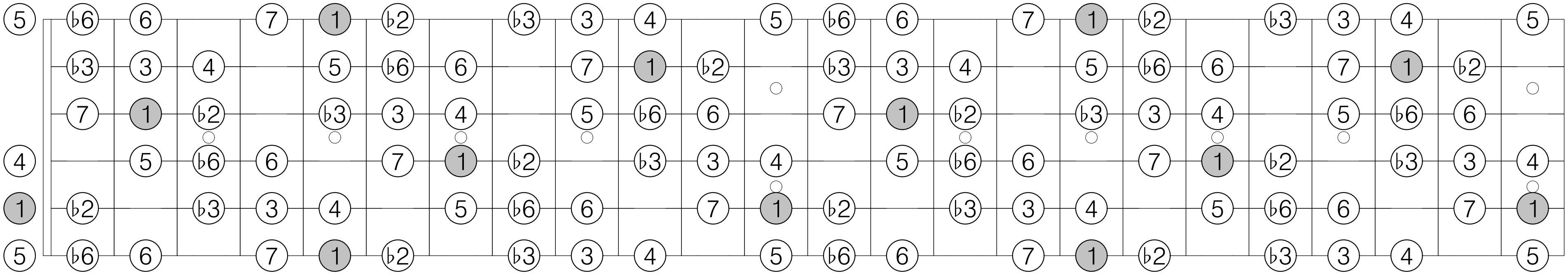

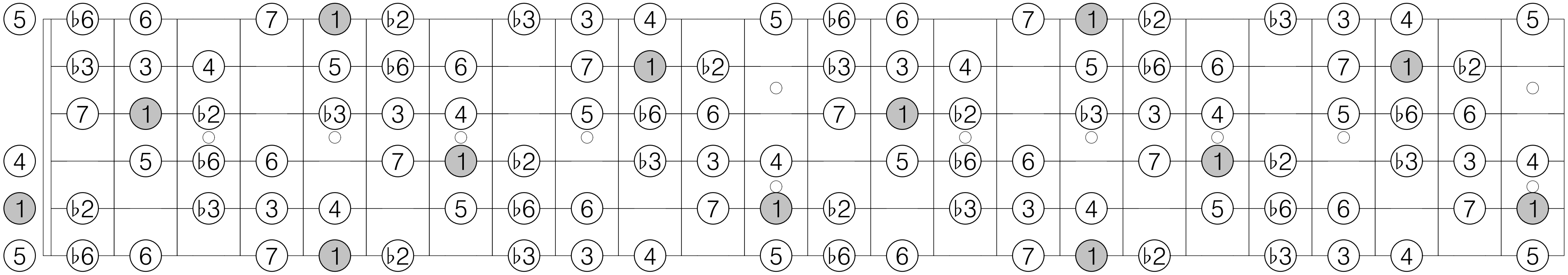

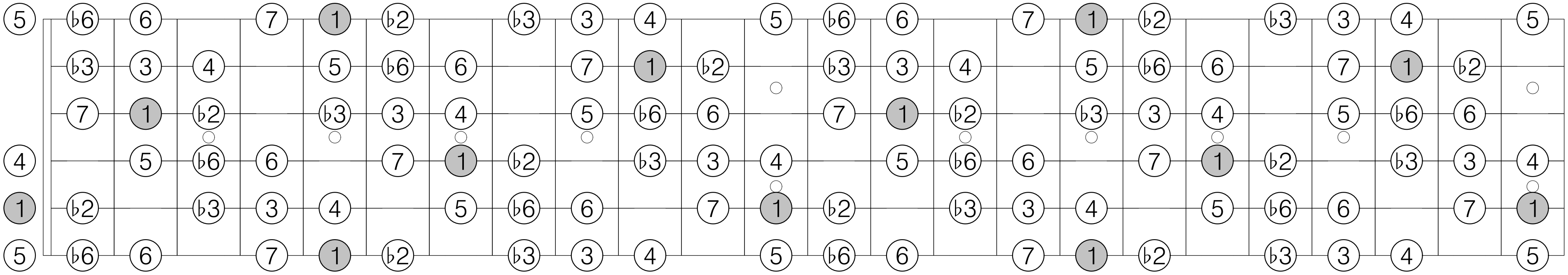

A transposition 3 of Mode 3 [1, 1, 2]

1 2 ♭3 3 ♭5 5 ♭6 ♭7 7 1 2 ♭3 3 ♭5 5 ♭6 ♭7 7

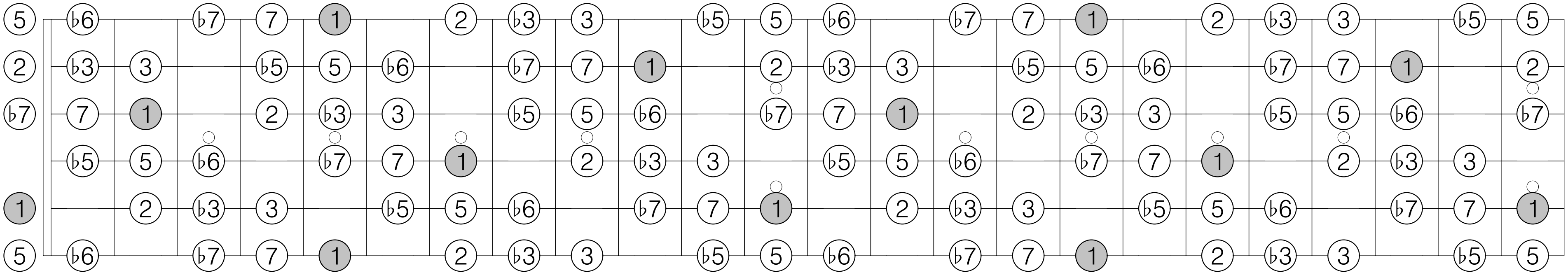

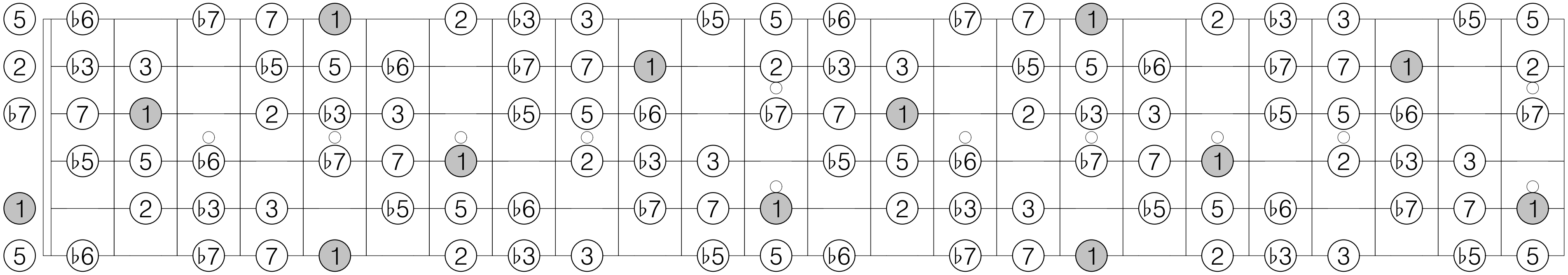

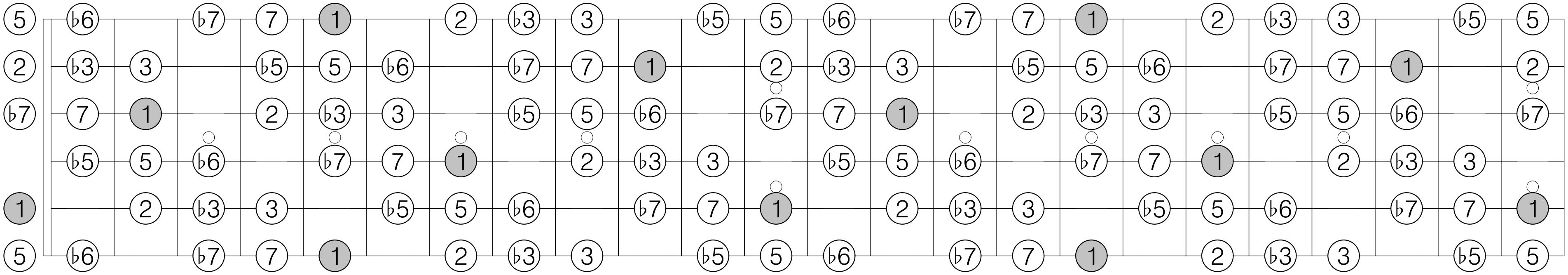

A transposition 1 of Mode 4 [1, 1, 3, 1]

1 ♭2 2 4 ♭5 5 ♭6 7 1 ♭2 2 4 ♭5 5 ♭6 7

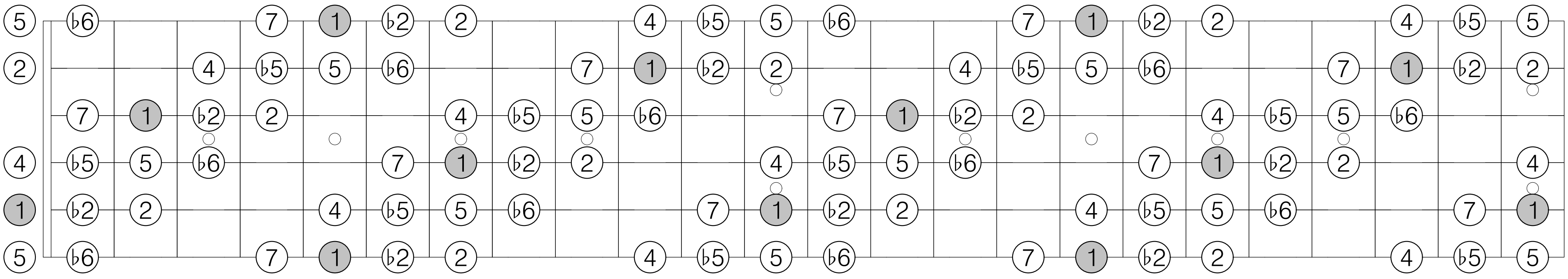

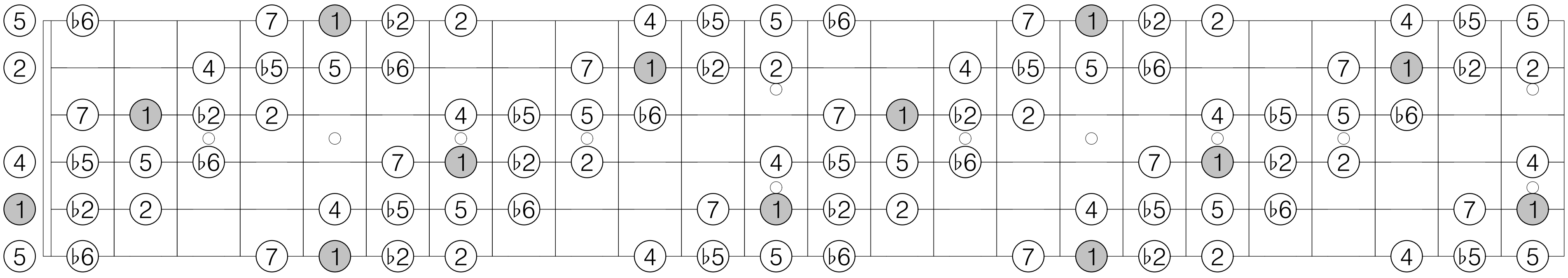

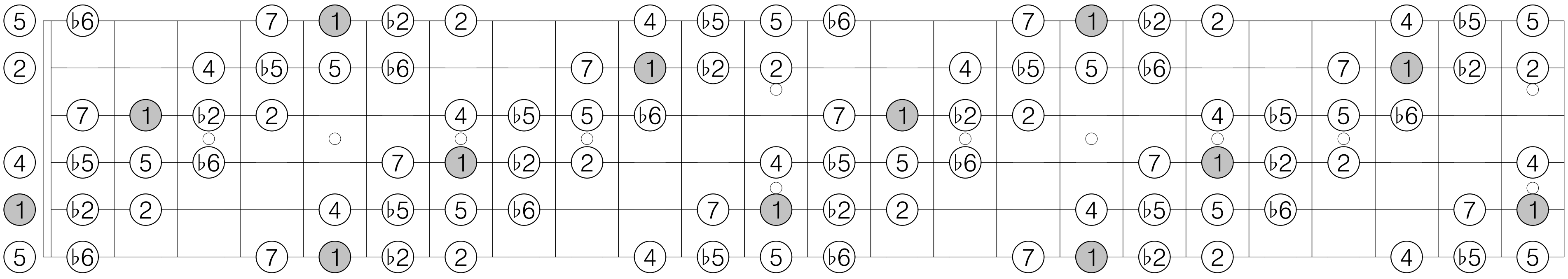

A transposition 2 of Mode 4 [1, 1, 3, 1]

1 ♭2 3 4 ♭5 5 ♭7 7 1 ♭2 3 4 ♭5 5 ♭7 7

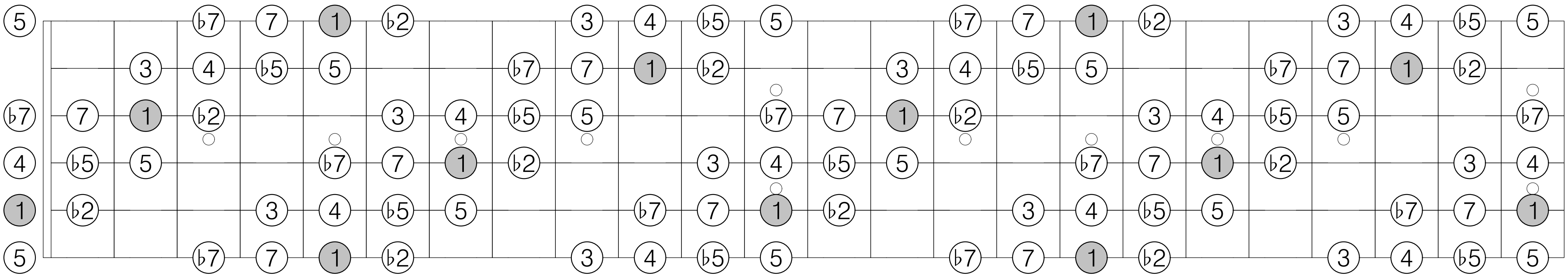

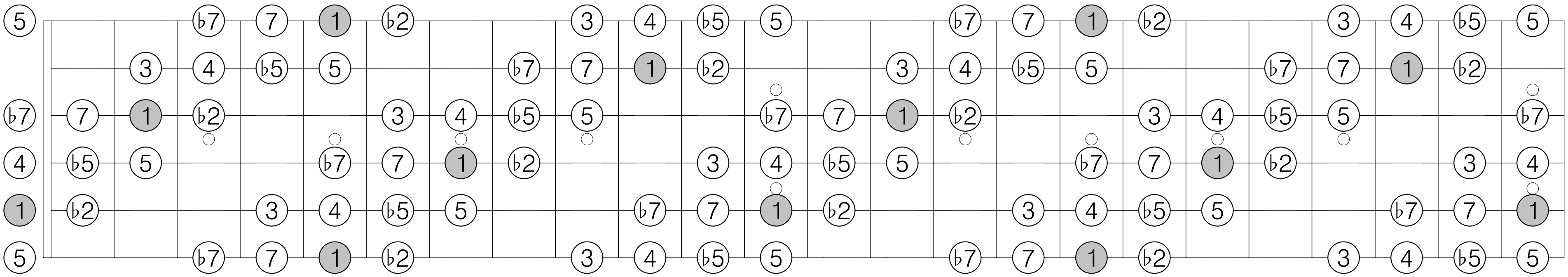

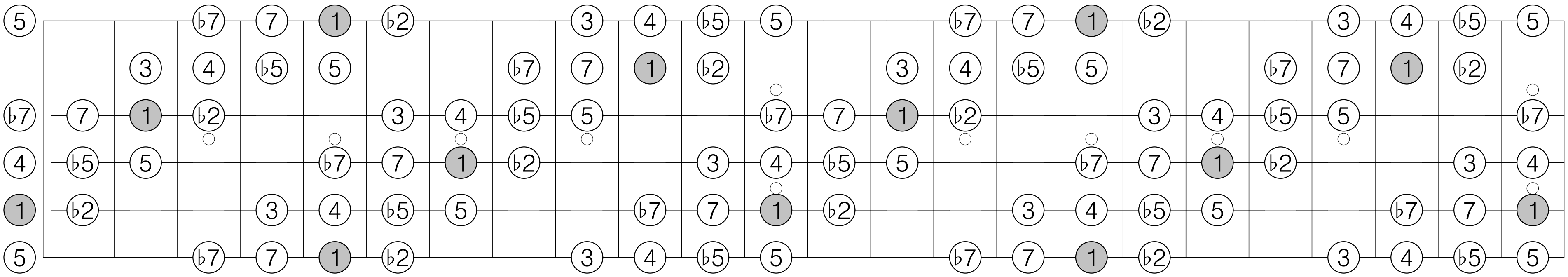

A transposition 3 of Mode 4 [1, 1, 3, 1]

1 ♭3 3 4 ♭5 6 ♭7 7 1 ♭3 3 4 ♭5 6 ♭7 7

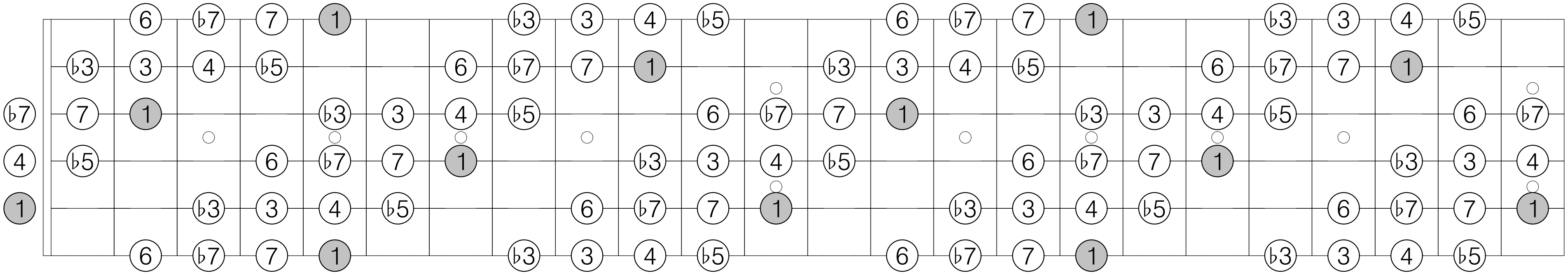

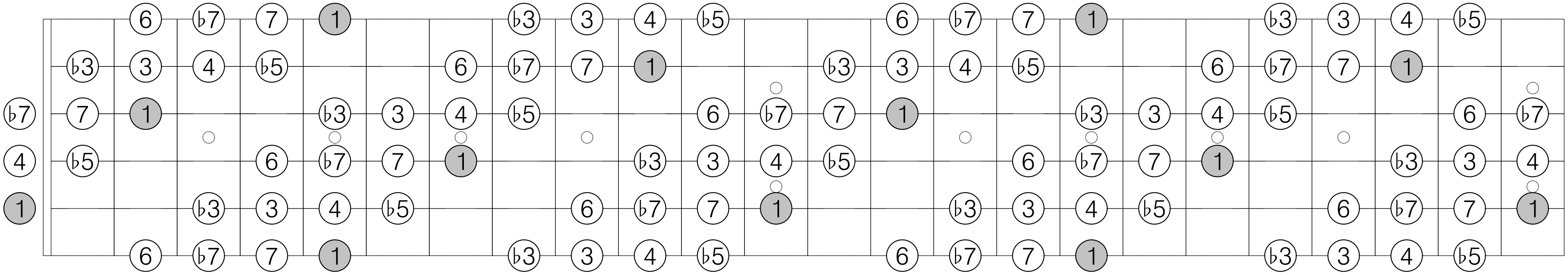

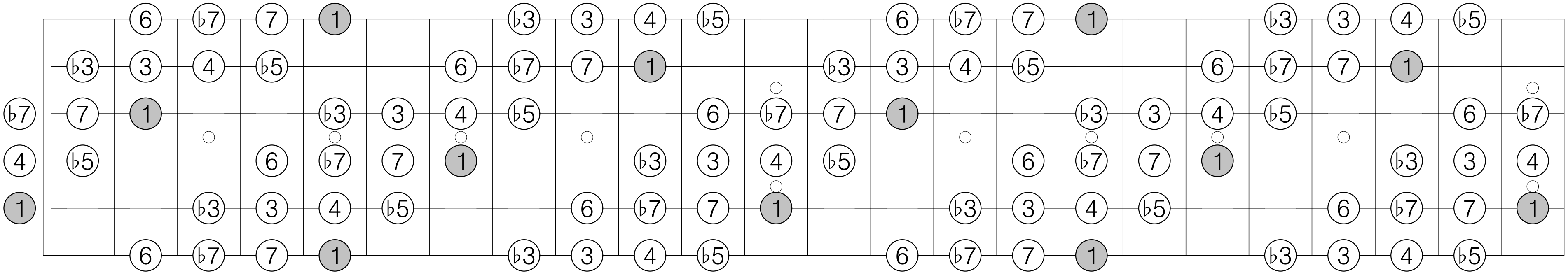

A transposition 4 of Mode 4 [1, 1, 3, 1]

1 ♭2 2 ♭3 ♭5 5 ♭6 6 1 ♭2 2 ♭3 ♭5 5 ♭6 6

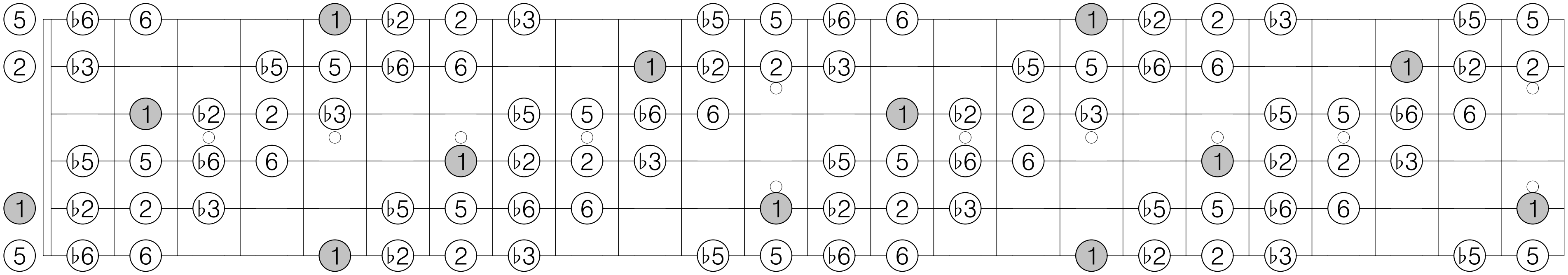

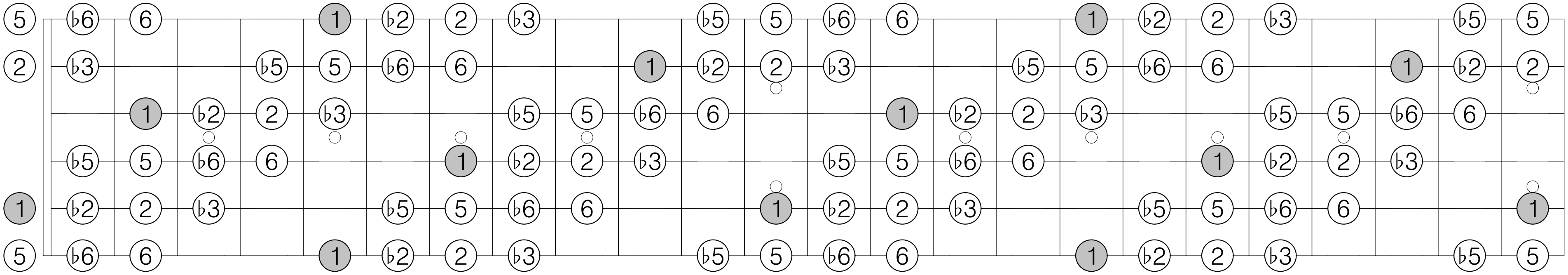

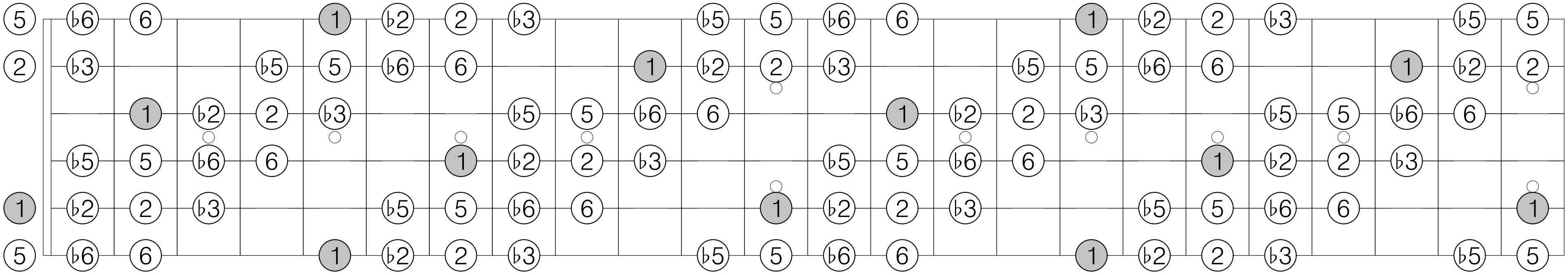

A transposition 1 of Mode 5 [1, 4, 1]

1 ♭2 4 ♭5 5 7 1 ♭2 4 ♭5 5 7

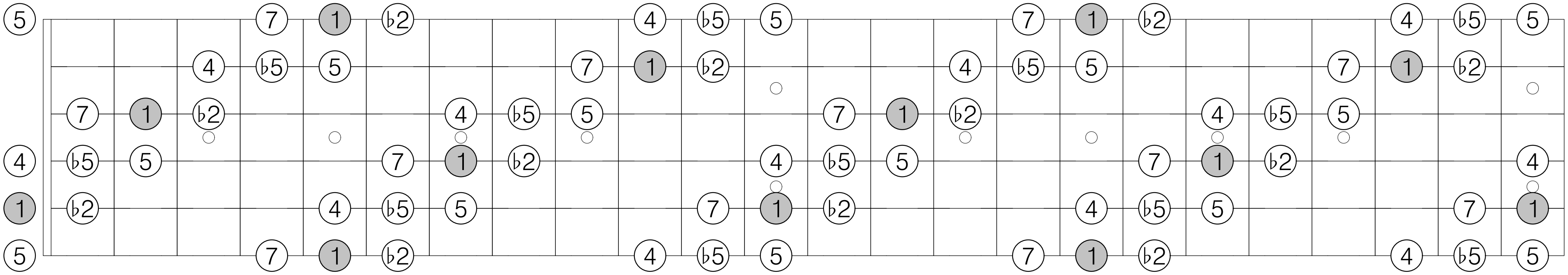

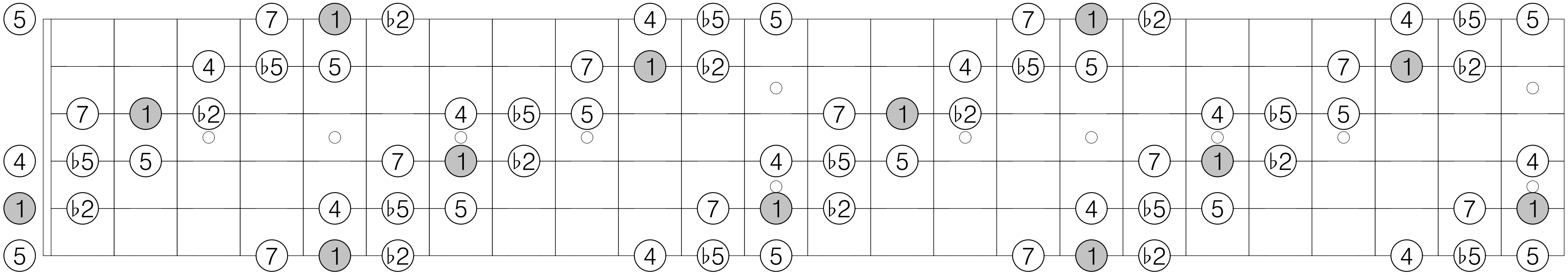

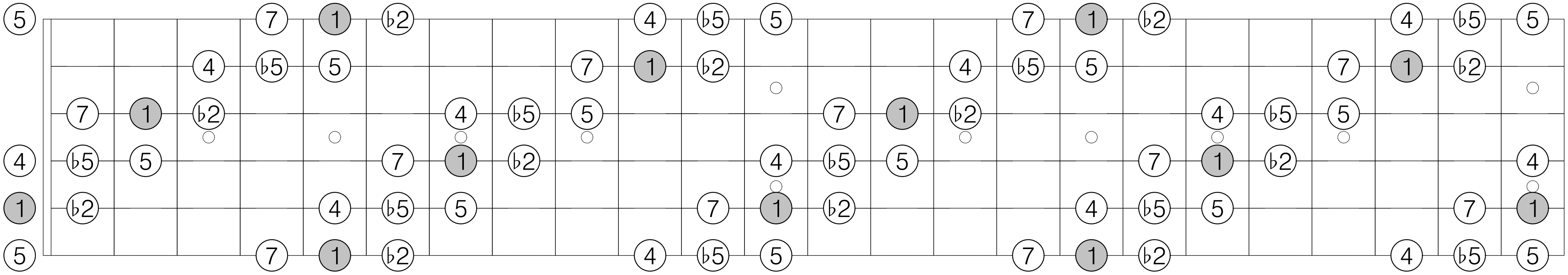

A transposition 2 of Mode 5 [1, 4, 1]

1 3 4 ♭5 ♭7 7 1 3 4 ♭5 ♭7 7

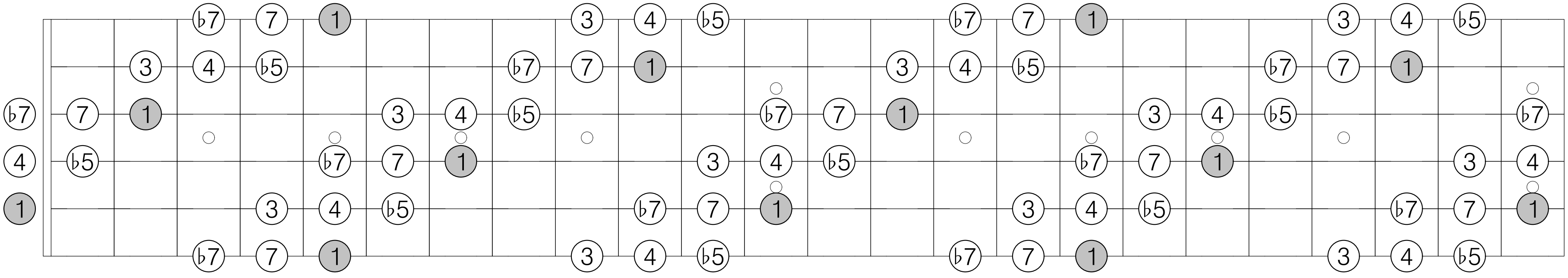

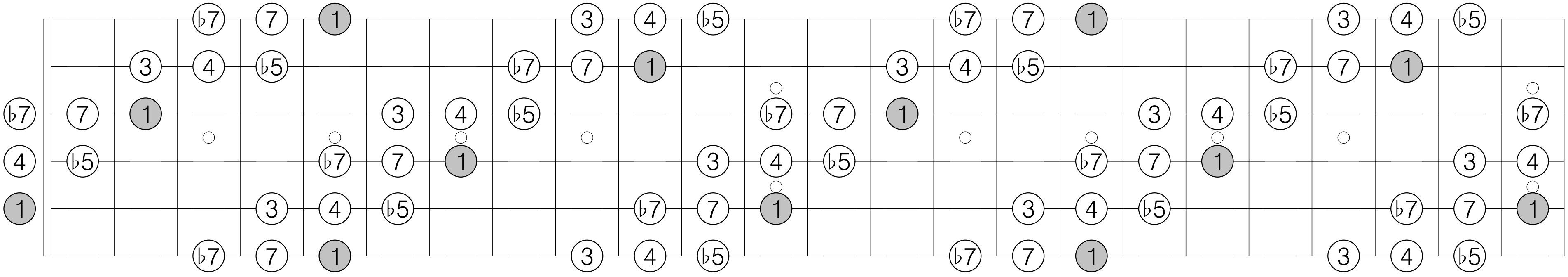

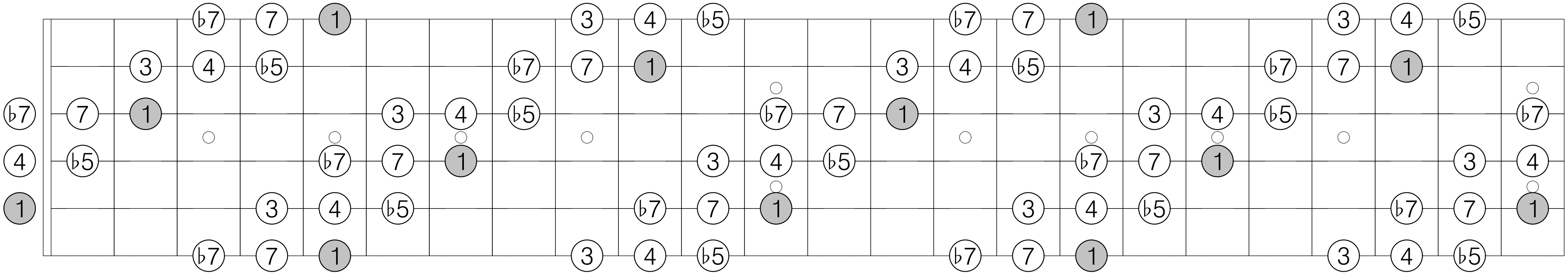

A transposition 3 of Mode 5 [1, 4, 1]

1 ♭2 2 ♭5 5 ♭6 1 ♭2 2 ♭5 5 ♭6

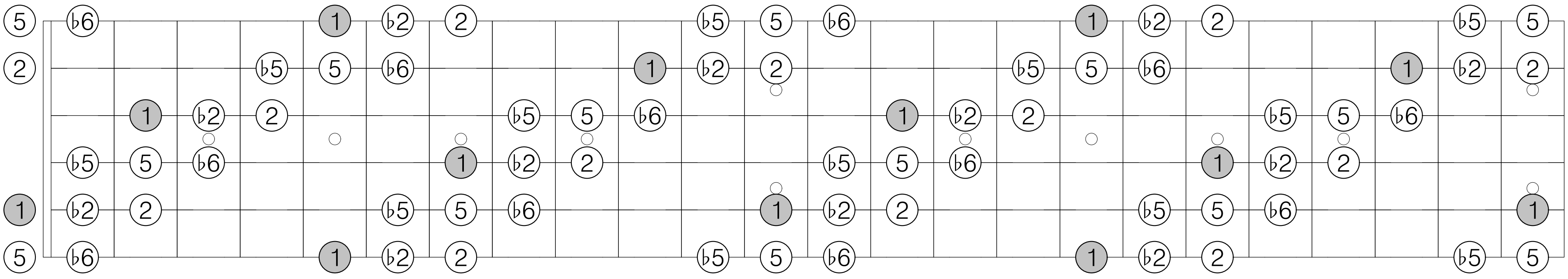

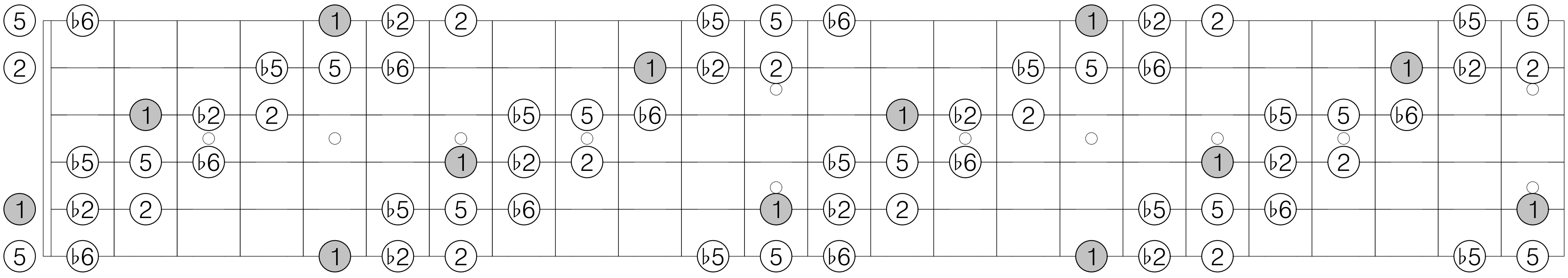

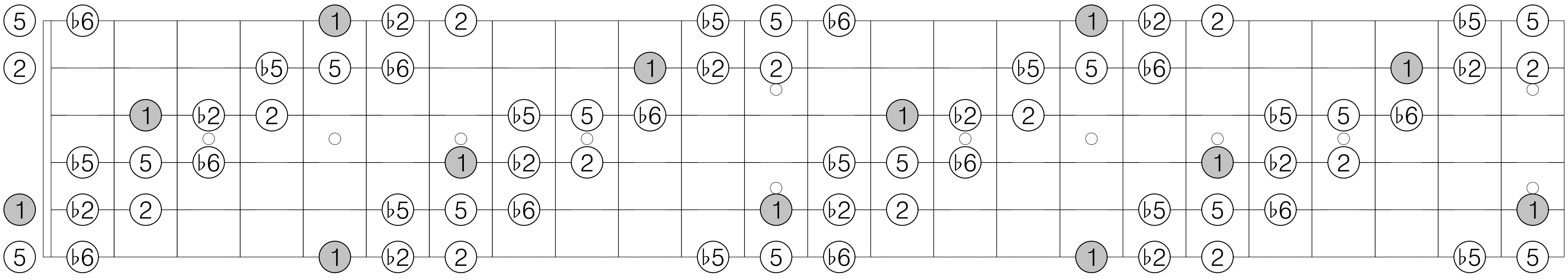

A transposition 1 of Mode 6 [1, 1, 2, 2]

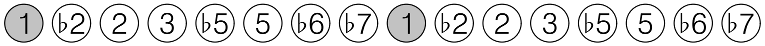

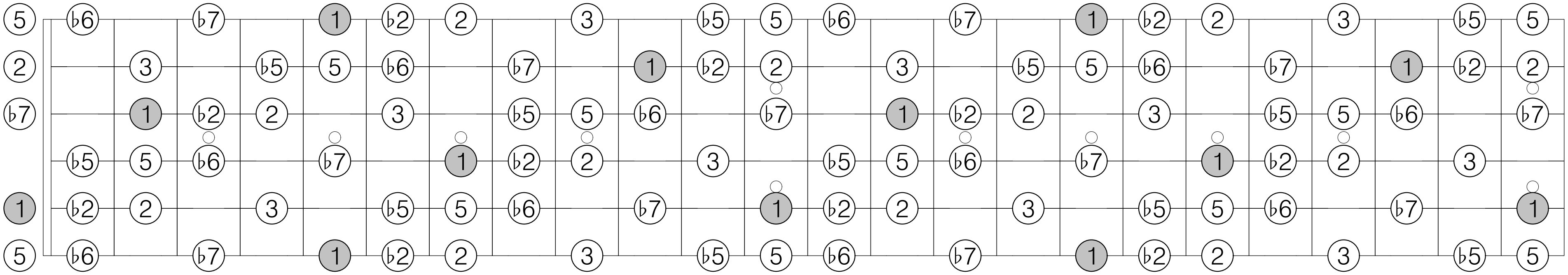

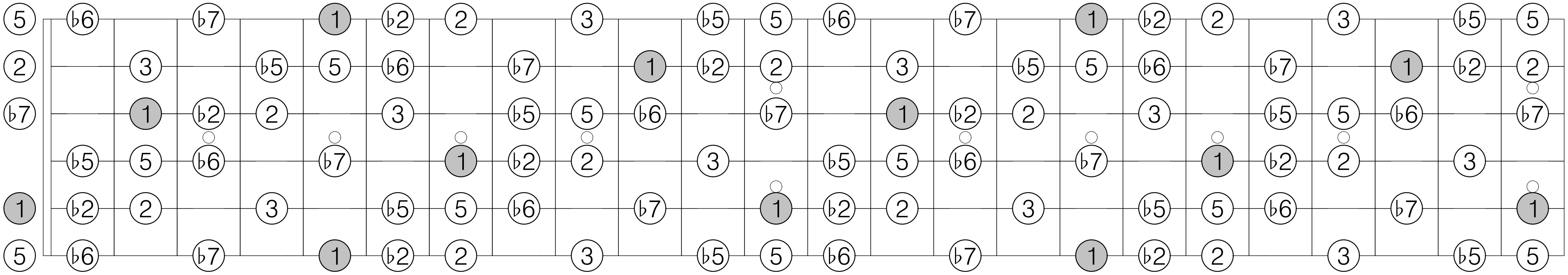

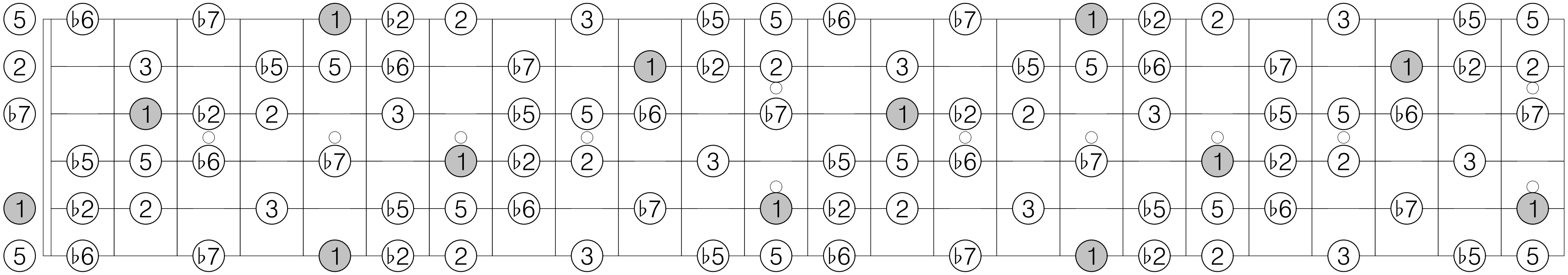

A transposition 2 of Mode 6 [1, 1, 2, 2]

1 ♭2 ♭3 4 ♭5 5 6 7 1 ♭2 ♭3 4 ♭5 5 6 7

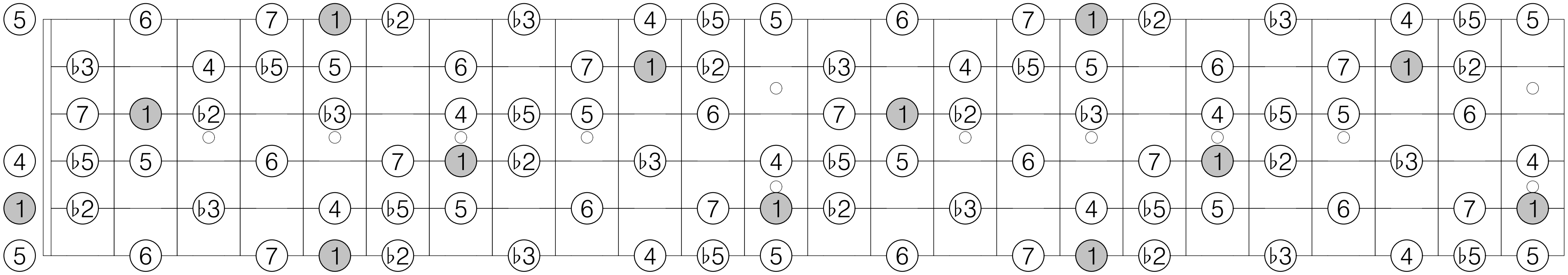

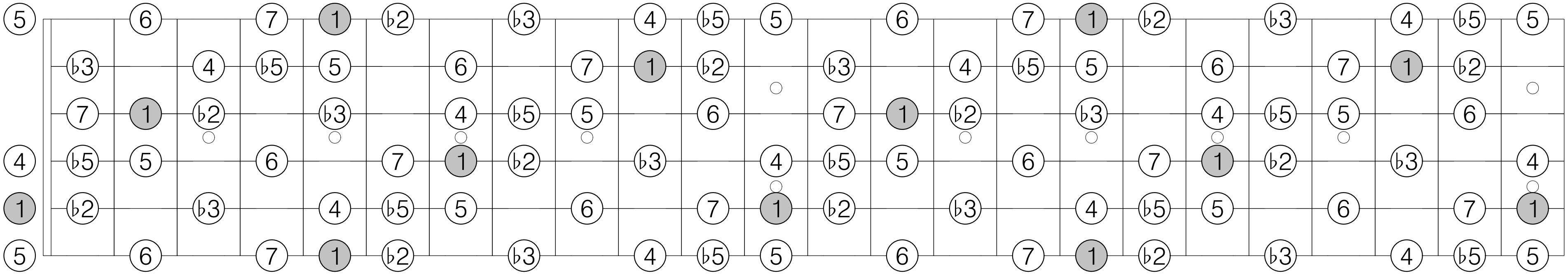

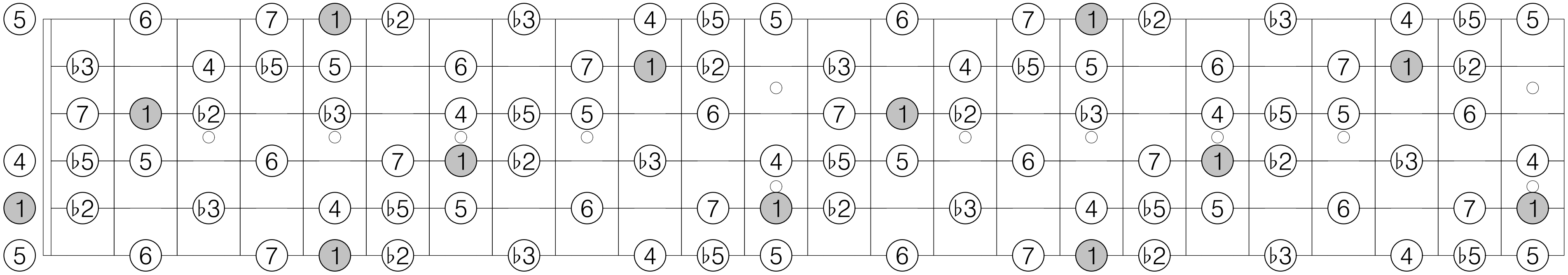

A transposition 3 of Mode 6 [1, 1, 2, 2]

1 2 3 4 ♭5 ♭6 ♭7 7 1 2 3 4 ♭5 ♭6 ♭7 7

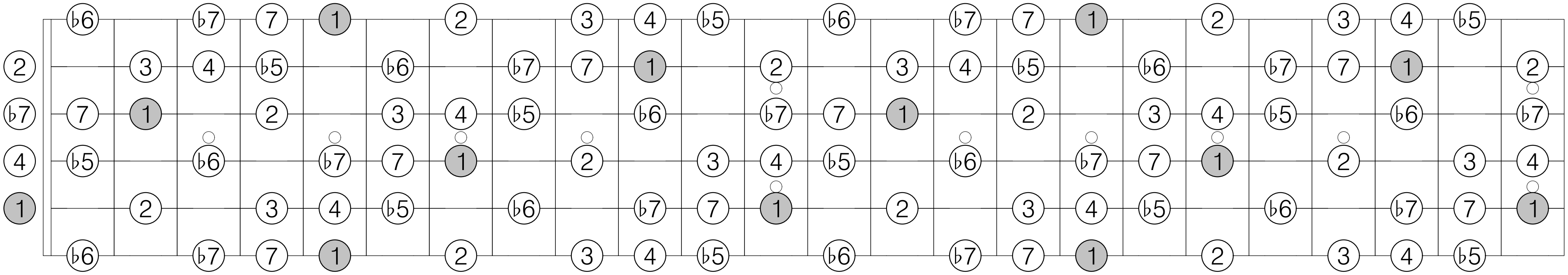

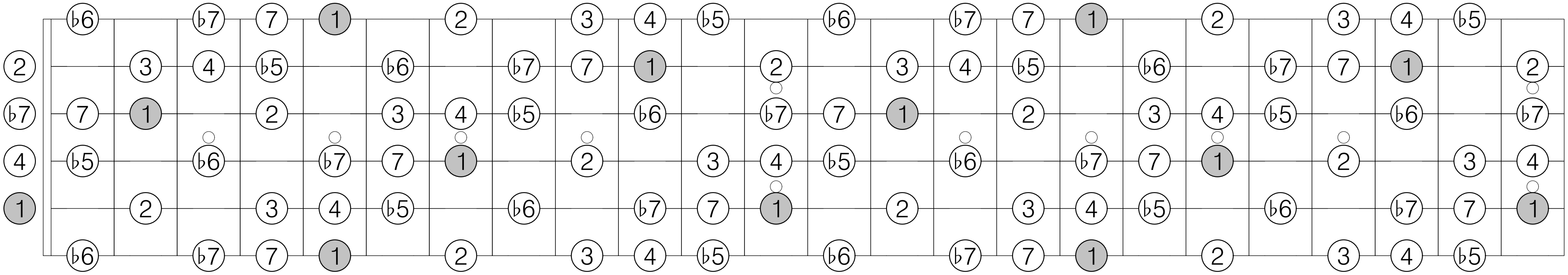

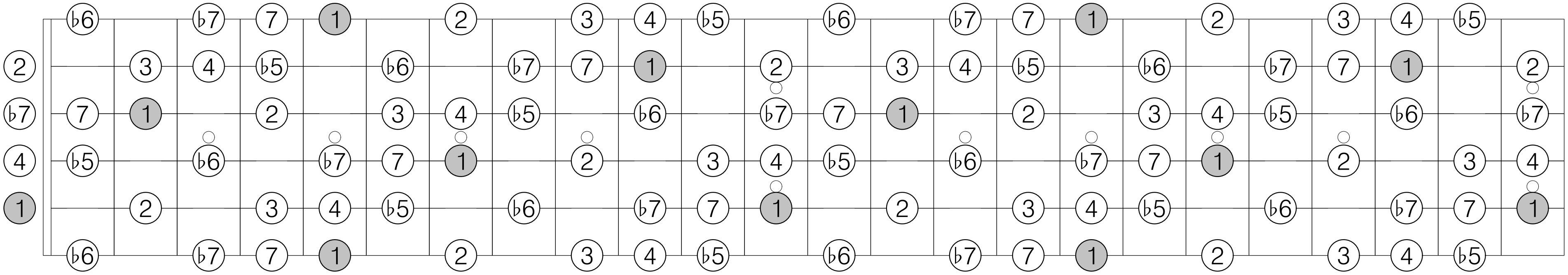

A transposition 4 of Mode 6 [1, 1, 2, 2]

1 2 ♭3 3 ♭5 ♭6 6 ♭7 1 2 ♭3 3 ♭5 ♭6 6 ♭7

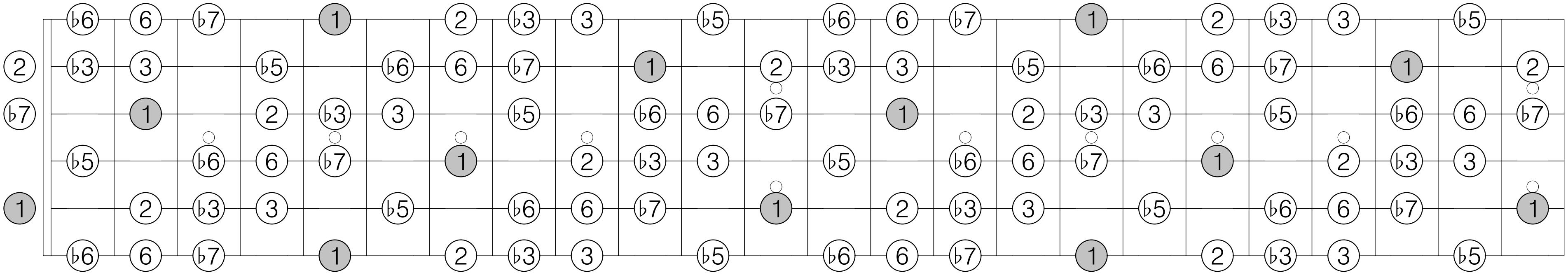

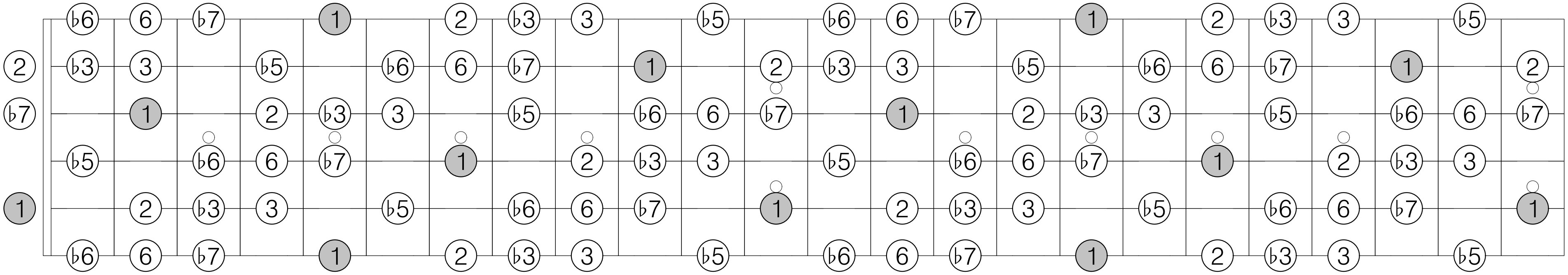

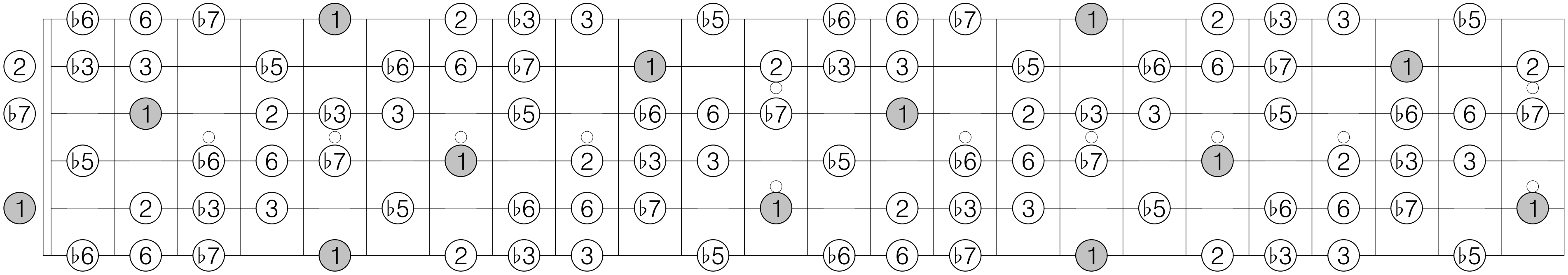

A transposition 1 of Mode 7 [1, 1, 1, 2, 1]

1 ♭2 2 ♭3 4 ♭5 5 ♭6 6 7 1 ♭2 2 ♭3 4 ♭5 5 ♭6 6 7

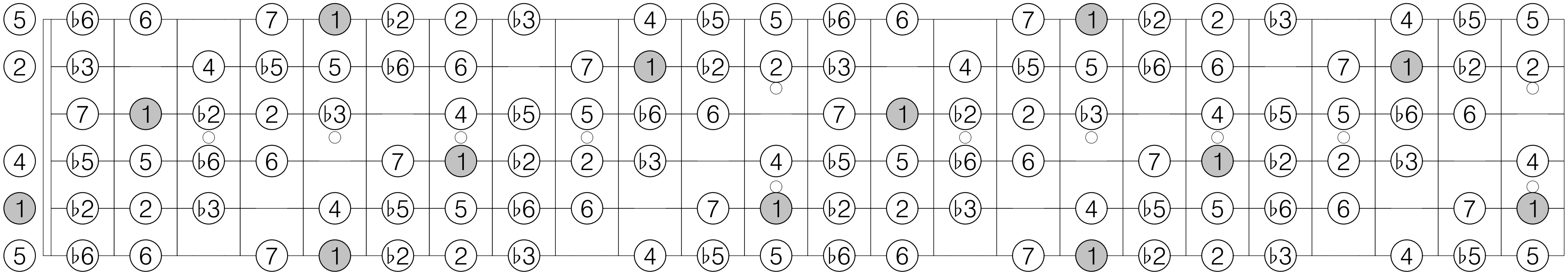

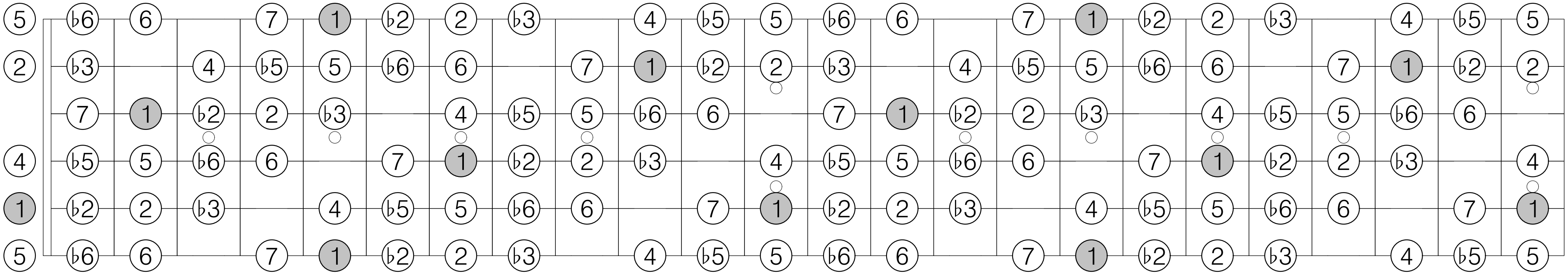

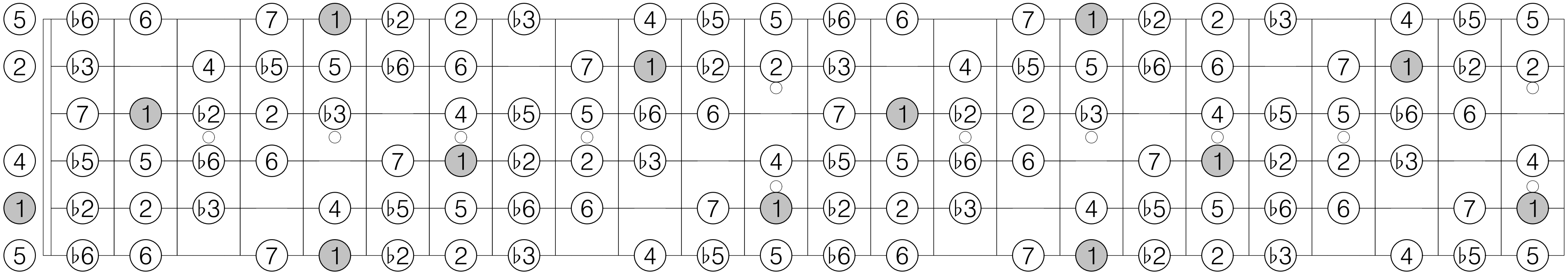

A transposition 2 of Mode 7 [1, 1, 1, 2, 1]

1 ♭2 2 3 4 ♭5 5 ♭6 ♭7 7 1 ♭2 2 3 4 ♭5 5 ♭6 ♭7 7

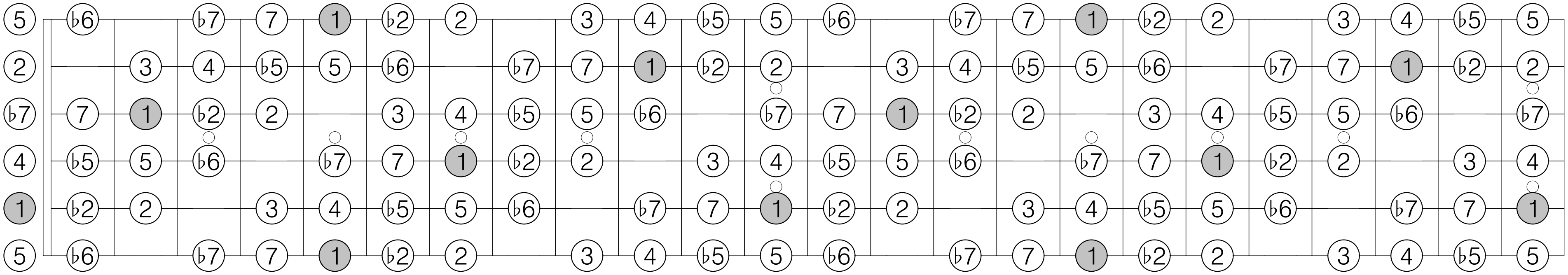

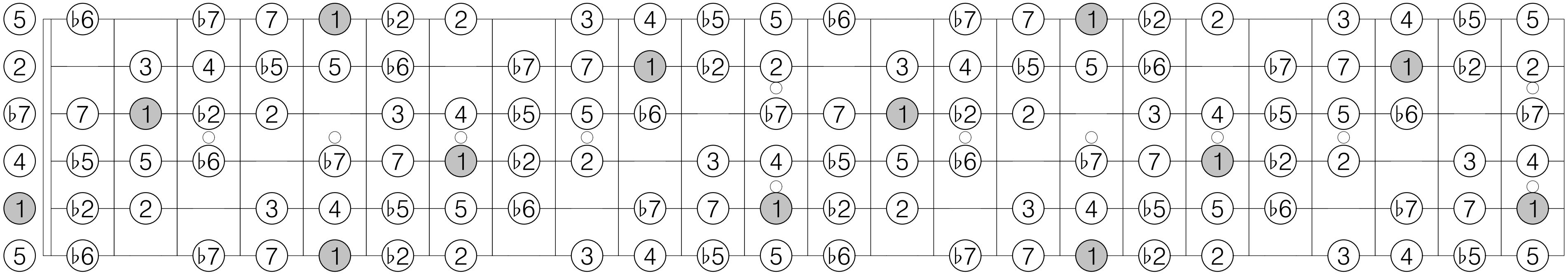

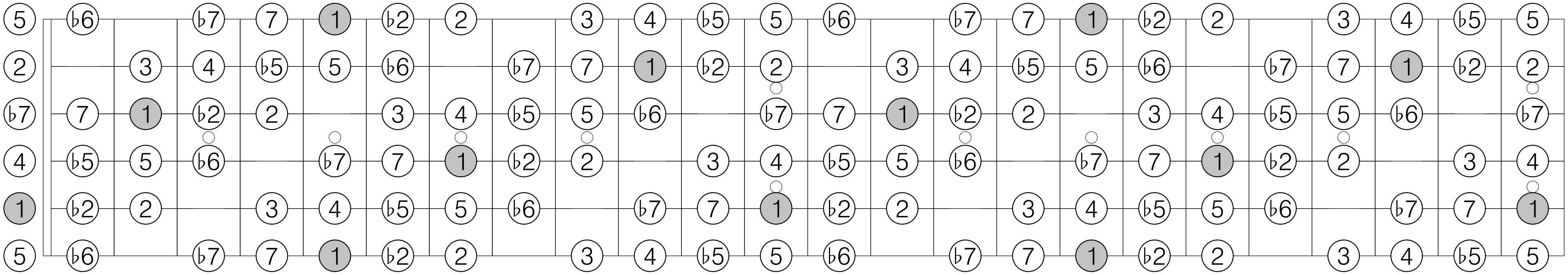

A transposition 3 of Mode 7 [1, 1, 1, 2, 1]

1 ♭2 ♭3 3 4 ♭5 5 6 ♭7 7 1 ♭2 ♭3 3 4 ♭5 5 6 ♭7 7

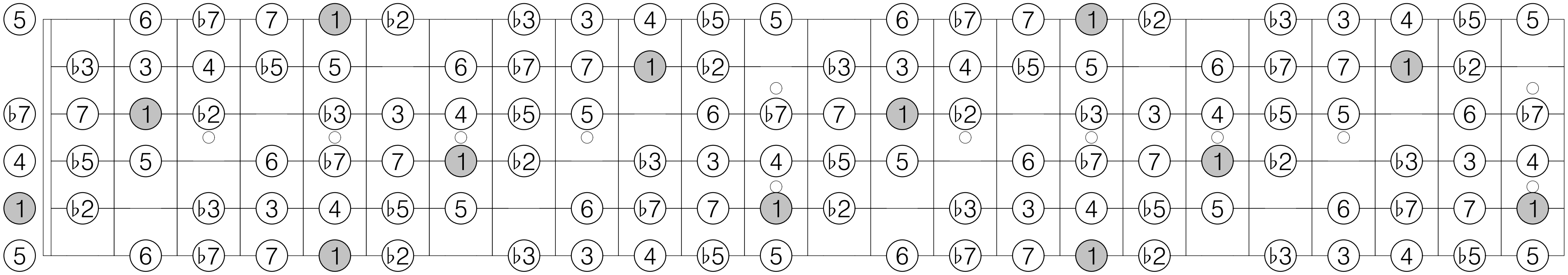

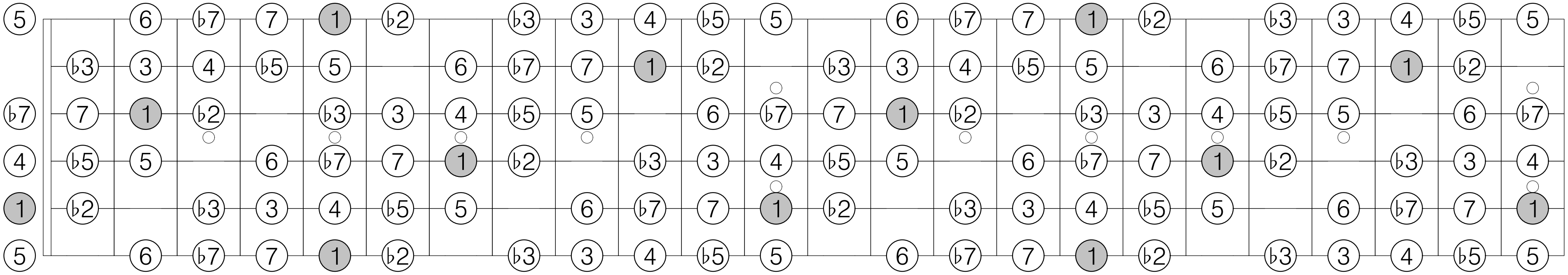

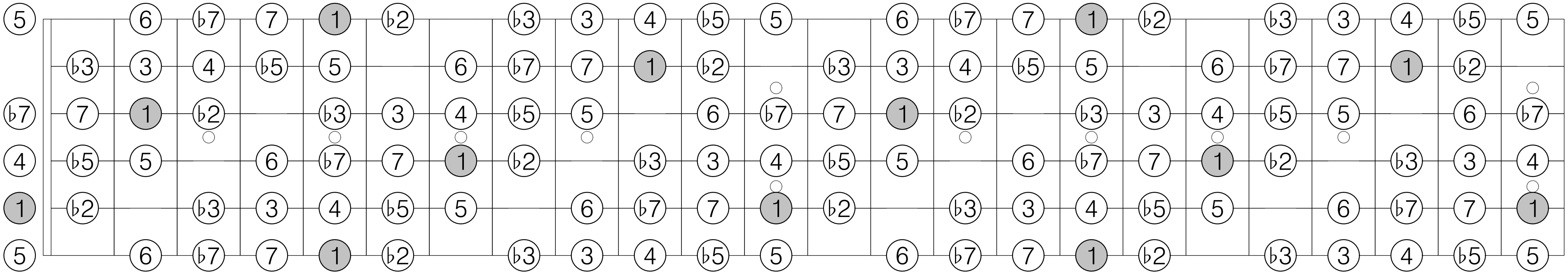

A transposition 4 of Mode 7 [1, 1, 1, 2, 1]

1 2 ♭3 3 4 ♭5 ♭6 6 ♭7 7 1 2 ♭3 3 4 ♭5 ♭6 6 ♭7 7

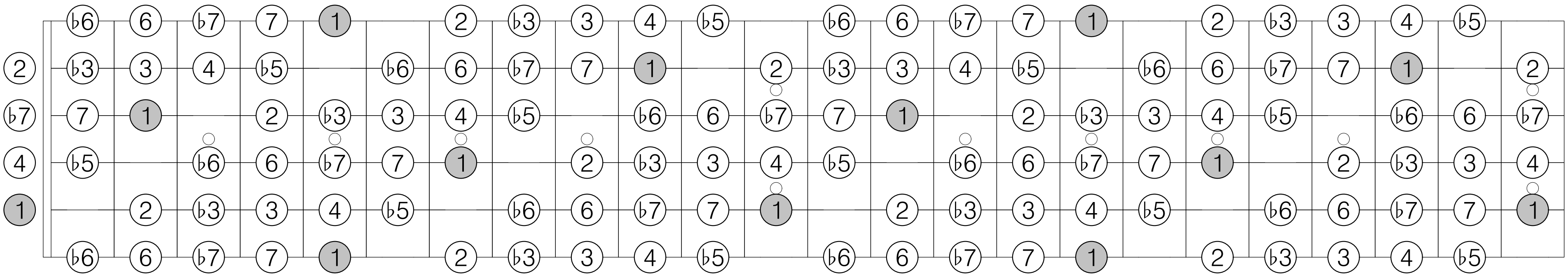

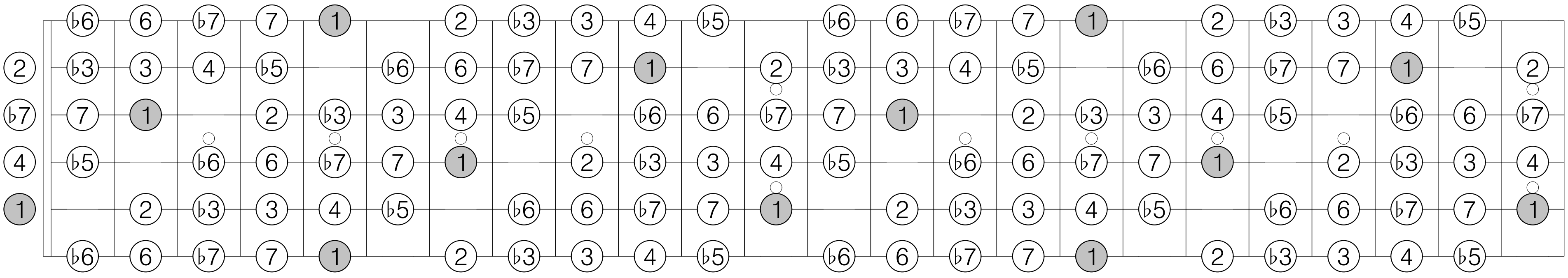

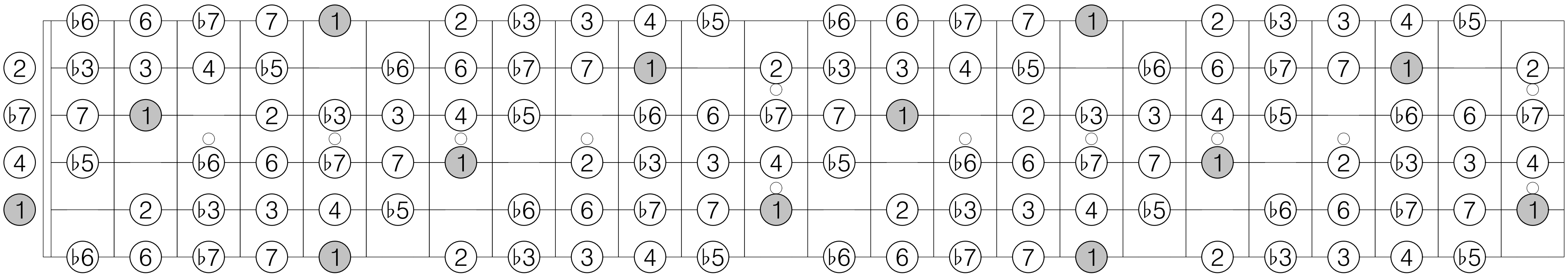

A transposition 5 of Mode 7 [1, 1, 1, 2, 1]

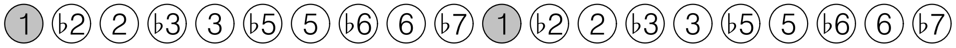

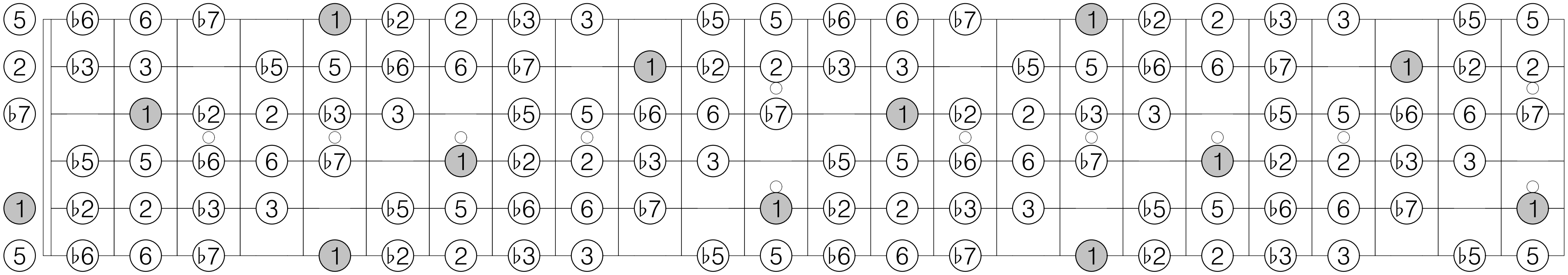

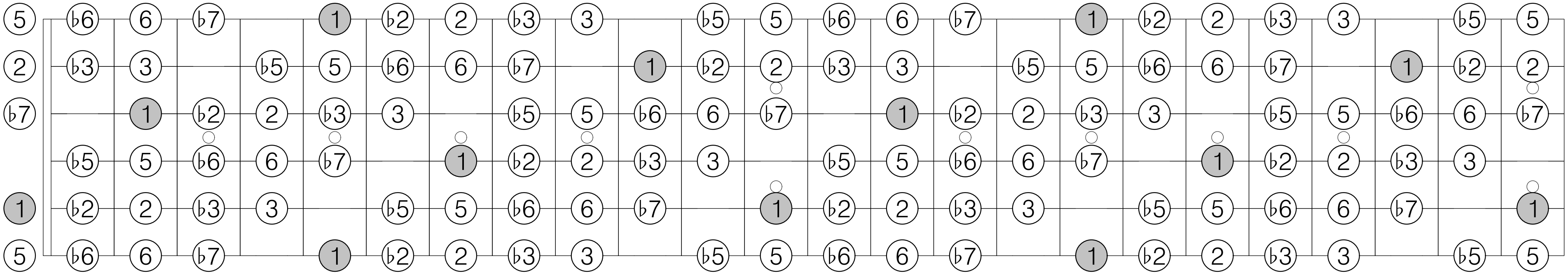

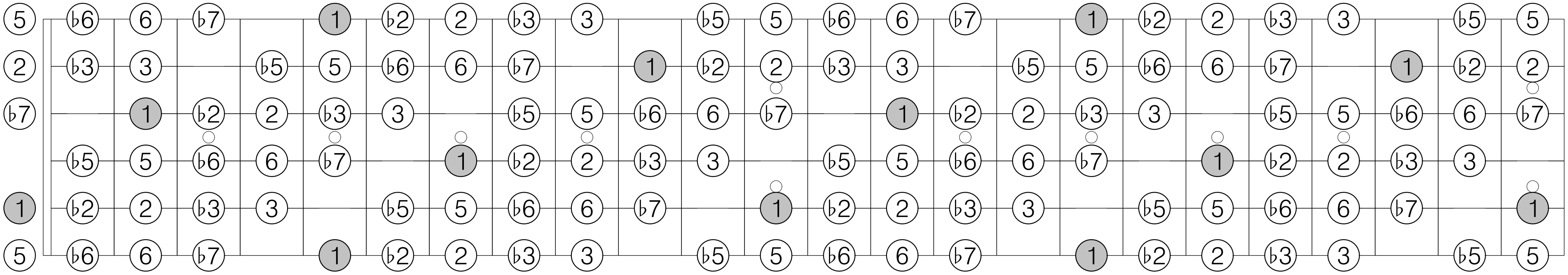

Bb transposition 1 of Mode 1 [2]

1 2 3 ♭5 ♭6 ♭7 1 2 3 ♭5 ♭6 ♭7

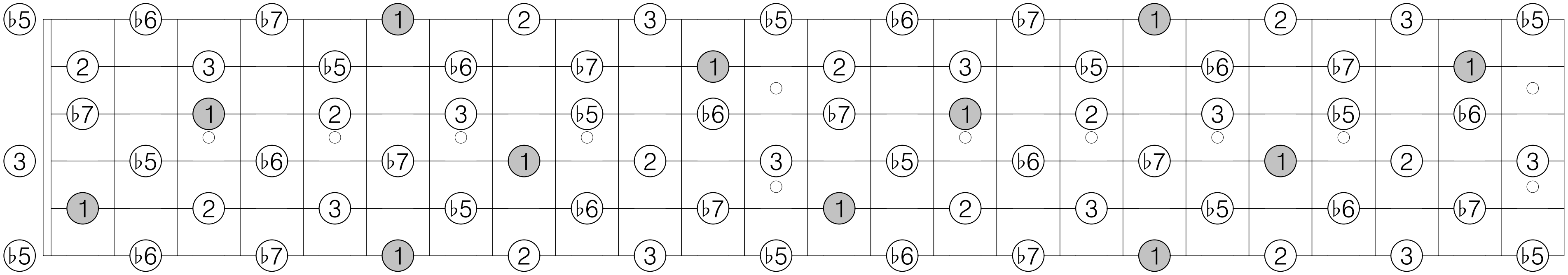

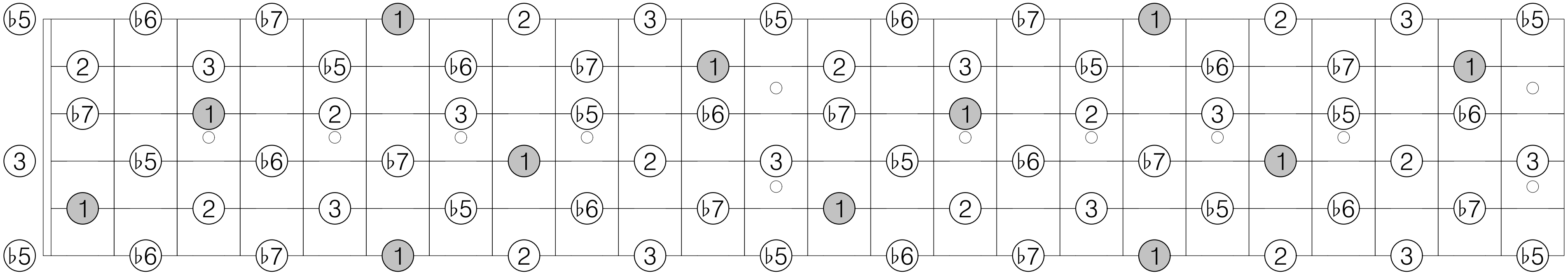

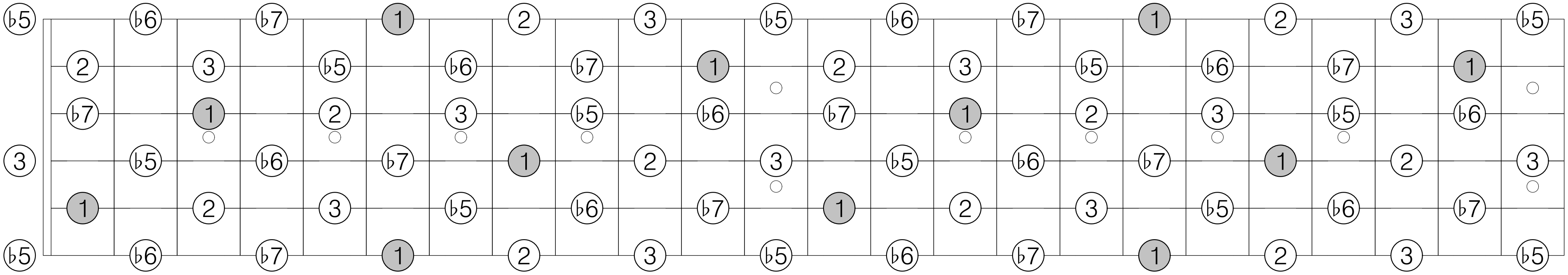

Bb transposition 1 of Mode 2 [1, 2]

1 ♭2 ♭3 3 ♭5 5 6 ♭7 1 ♭2 ♭3 3 ♭5 5 6 ♭7

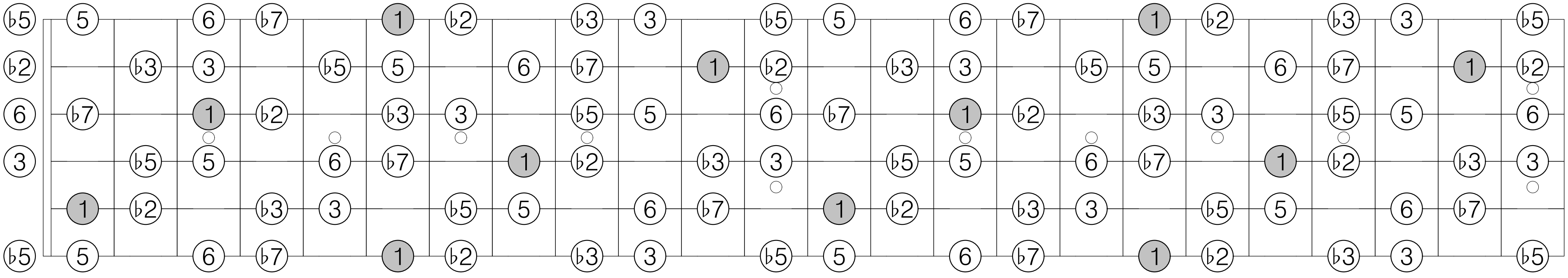

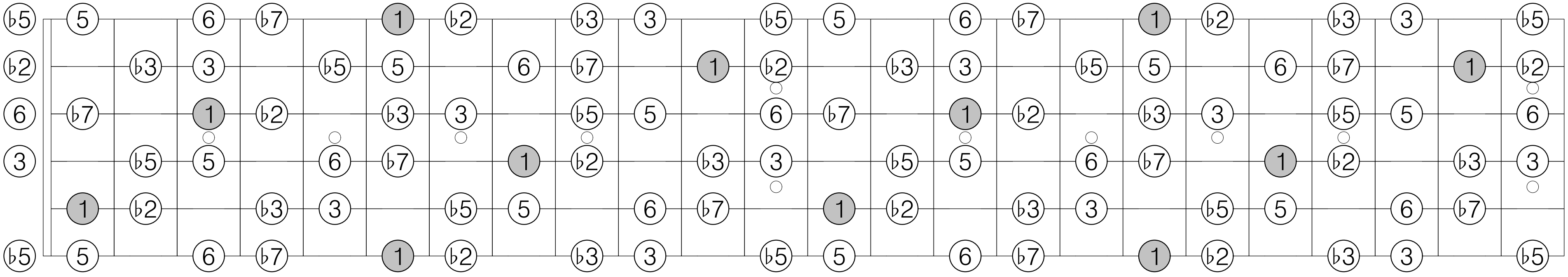

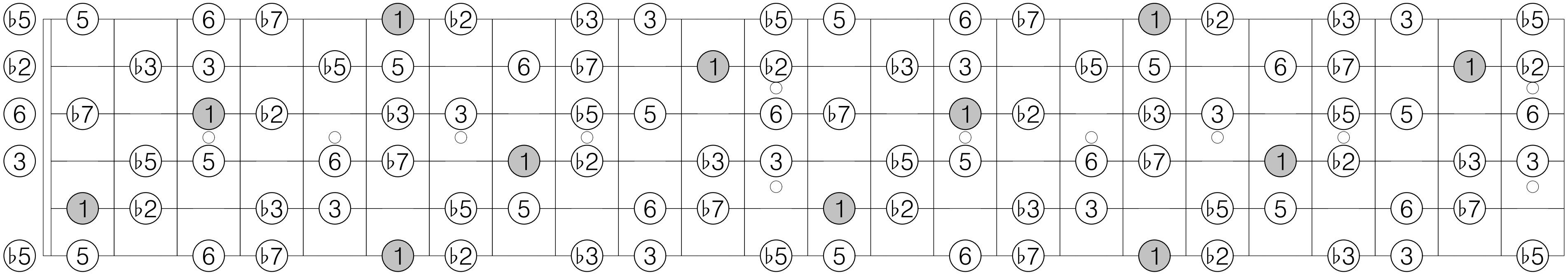

Bb transposition 2 of Mode 2 [1, 2]

1 2 ♭3 4 ♭5 ♭6 6 7 1 2 ♭3 4 ♭5 ♭6 6 7

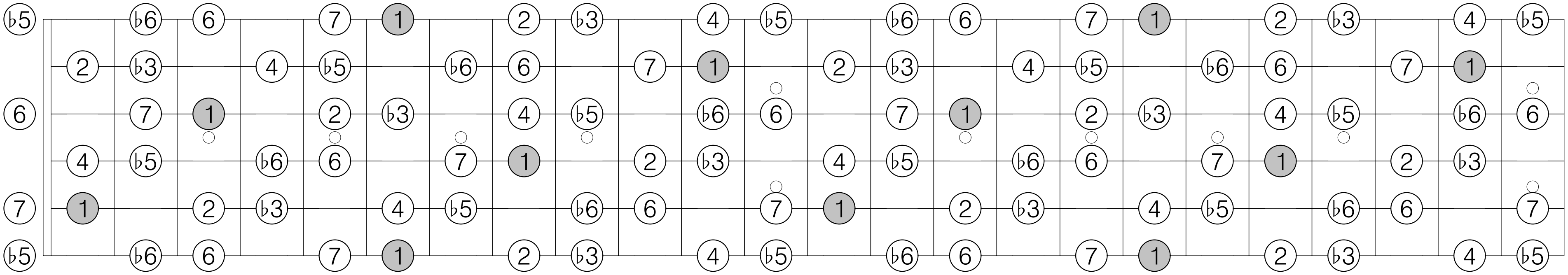

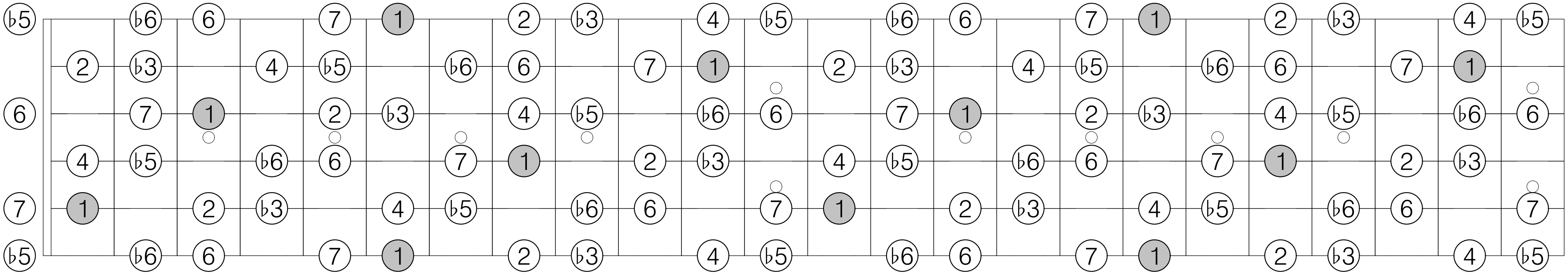

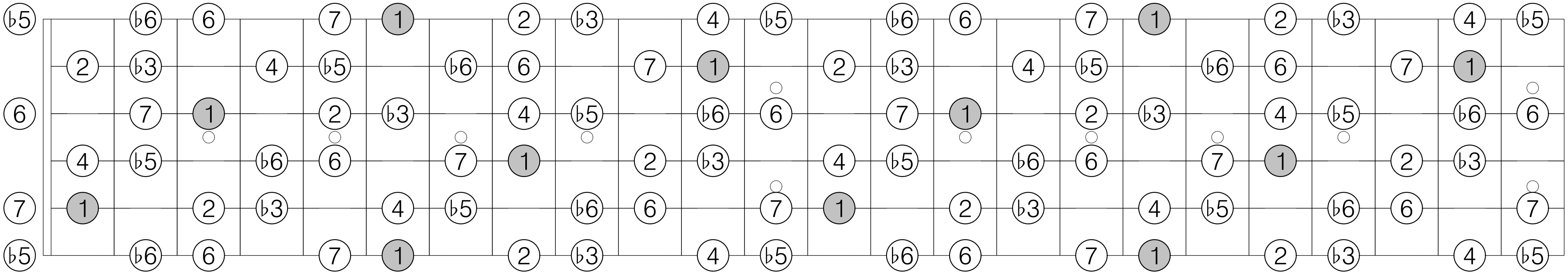

Bb transposition 1 of Mode 3 [1, 1, 2]

1 ♭2 2 3 4 ♭5 ♭6 6 ♭7 1 ♭2 2 3 4 ♭5 ♭6 6 ♭7

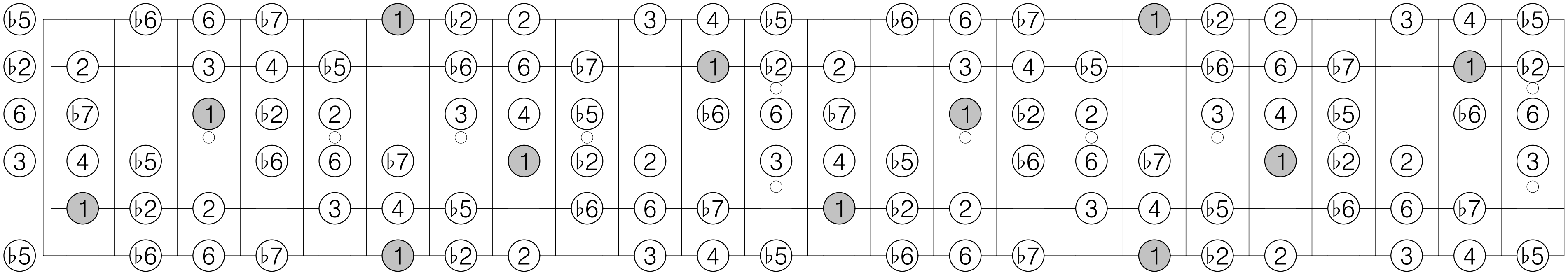

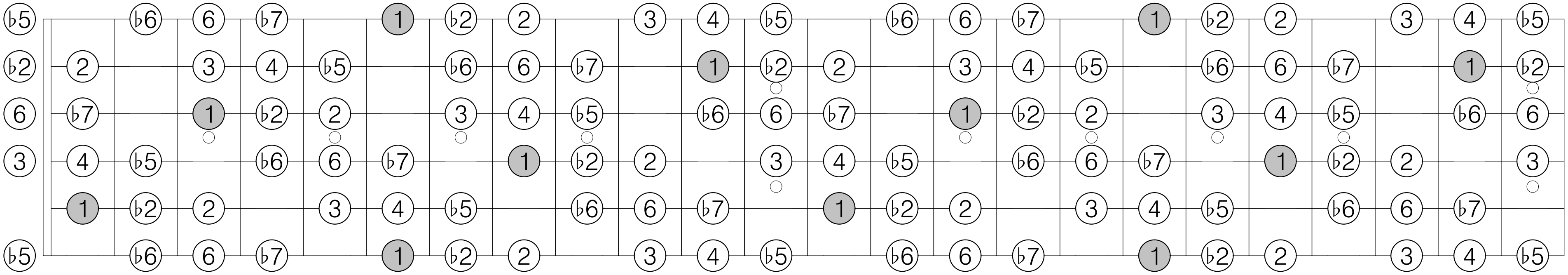

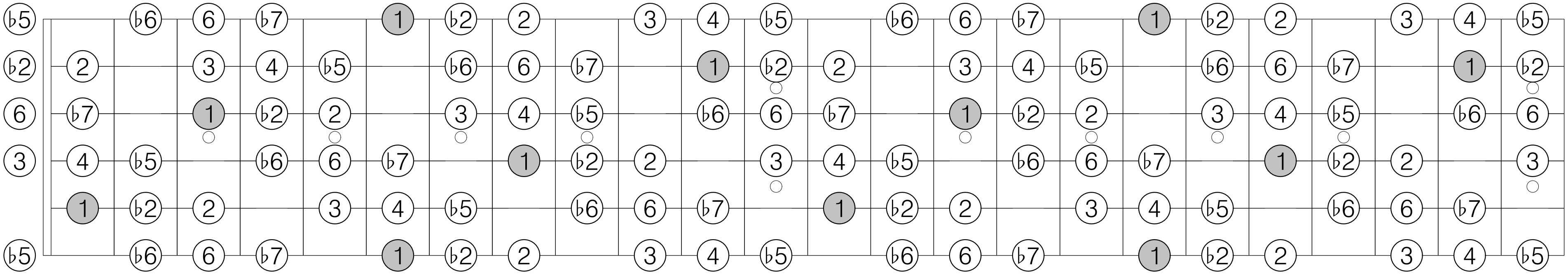

Bb transposition 2 of Mode 3 [1, 1, 2]

1 ♭2 ♭3 3 4 5 ♭6 6 7 1 ♭2 ♭3 3 4 5 ♭6 6 7

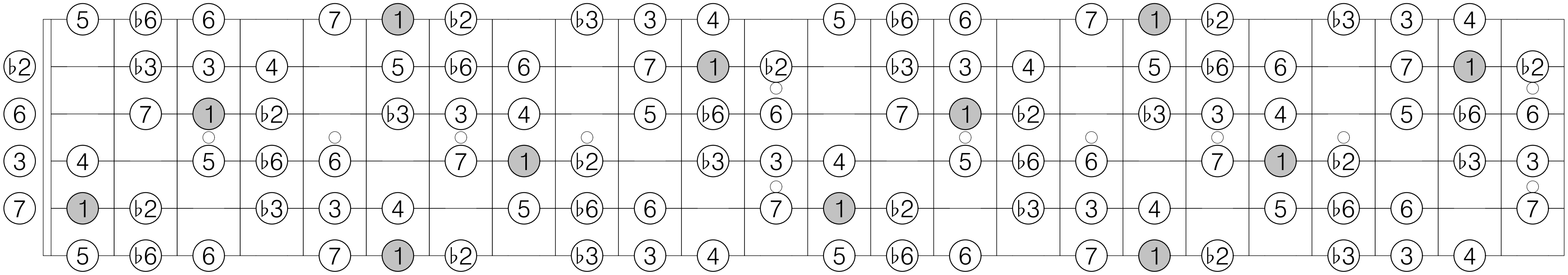

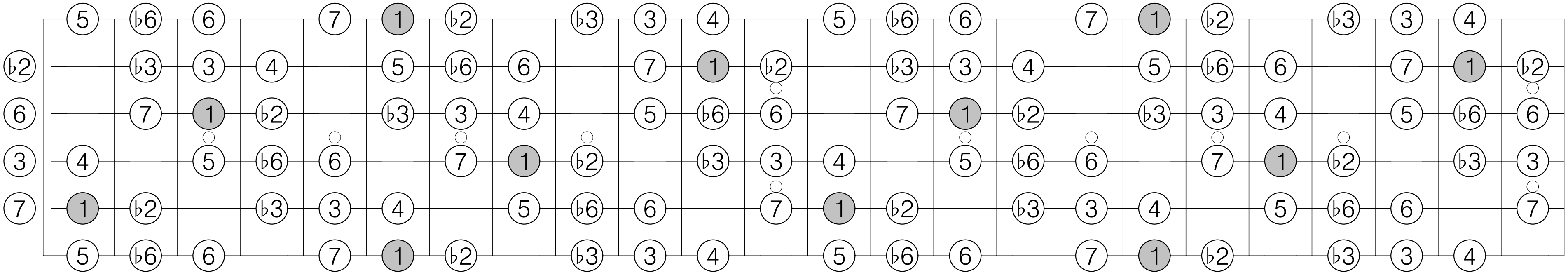

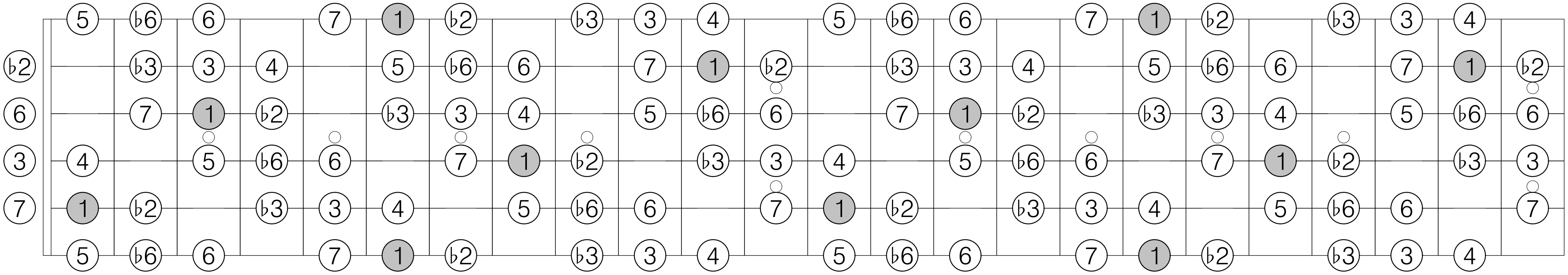

Bb transposition 3 of Mode 3 [1, 1, 2]

1 2 ♭3 3 ♭5 5 ♭6 ♭7 7 1 2 ♭3 3 ♭5 5 ♭6 ♭7 7

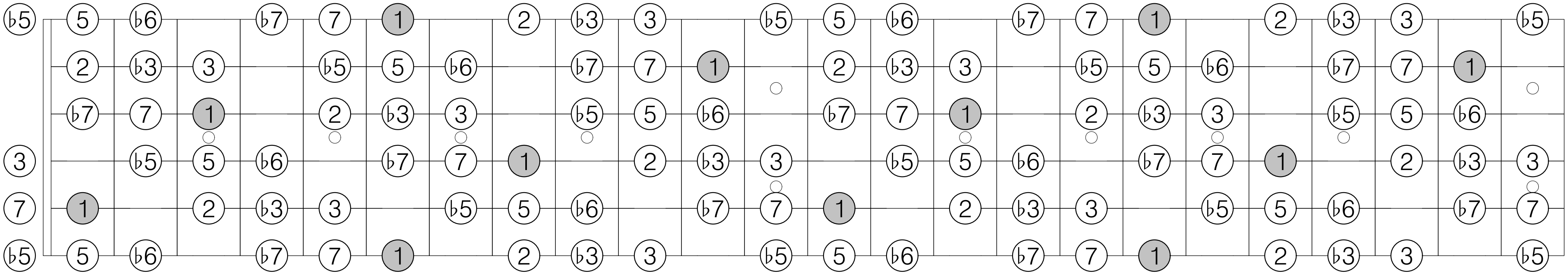

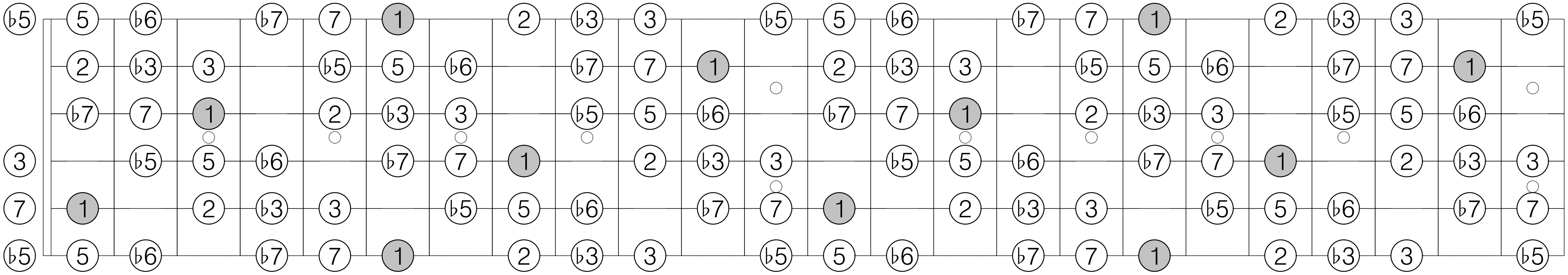

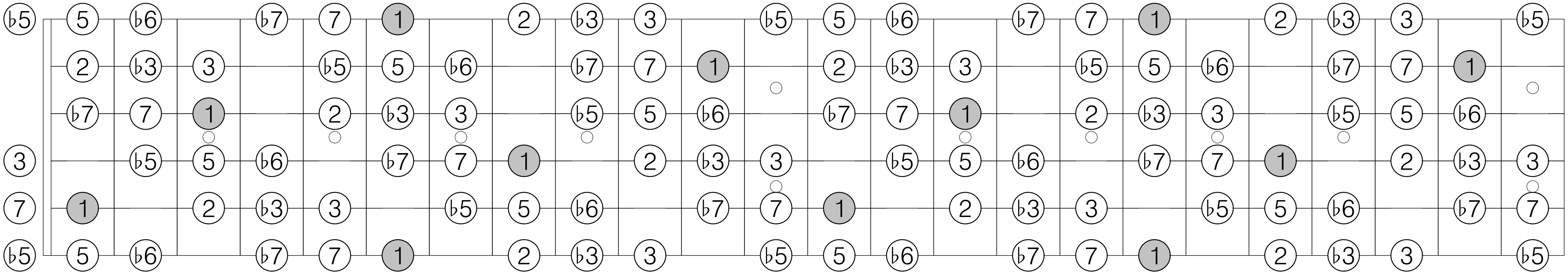

Bb transposition 1 of Mode 4 [1, 1, 3, 1]

1 ♭2 2 4 ♭5 5 ♭6 7 1 ♭2 2 4 ♭5 5 ♭6 7

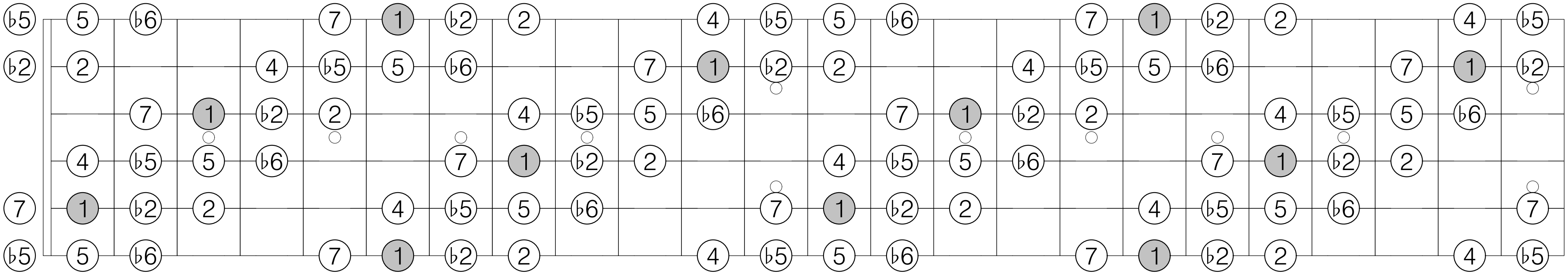

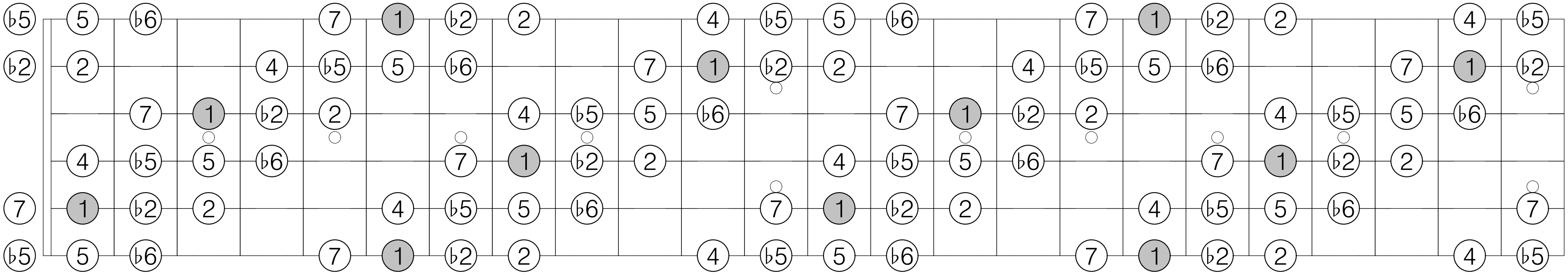

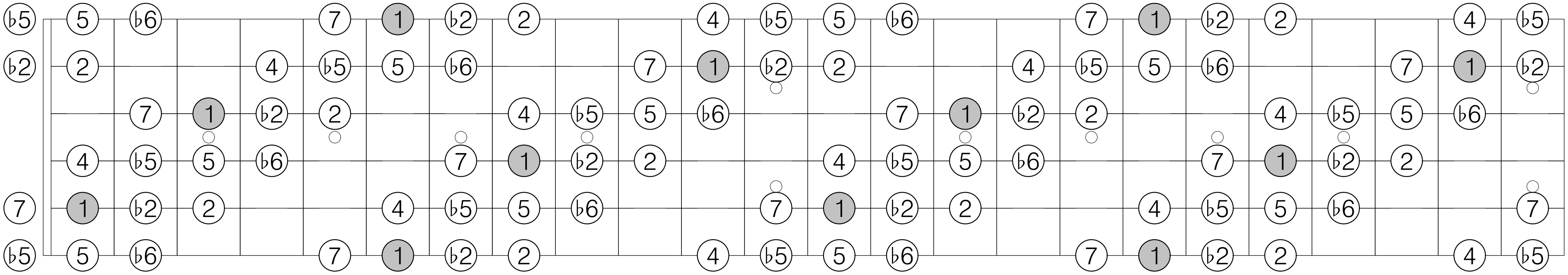

Bb transposition 2 of Mode 4 [1, 1, 3, 1]

1 ♭2 3 4 ♭5 5 ♭7 7 1 ♭2 3 4 ♭5 5 ♭7 7

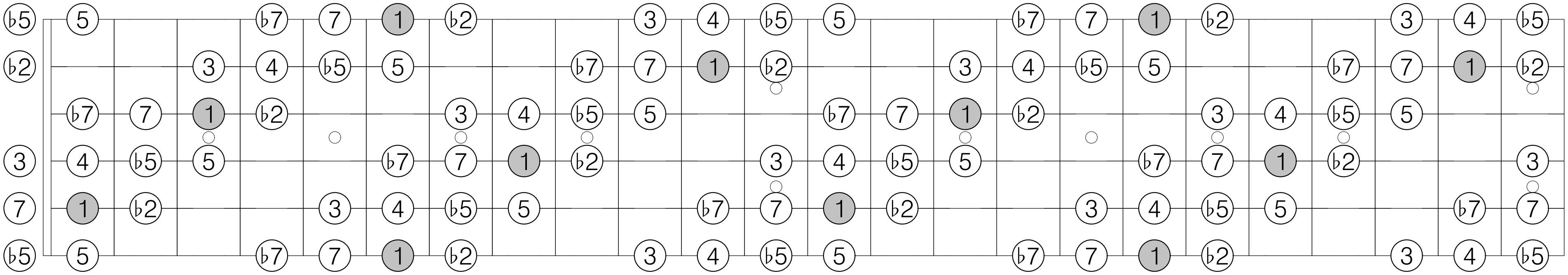

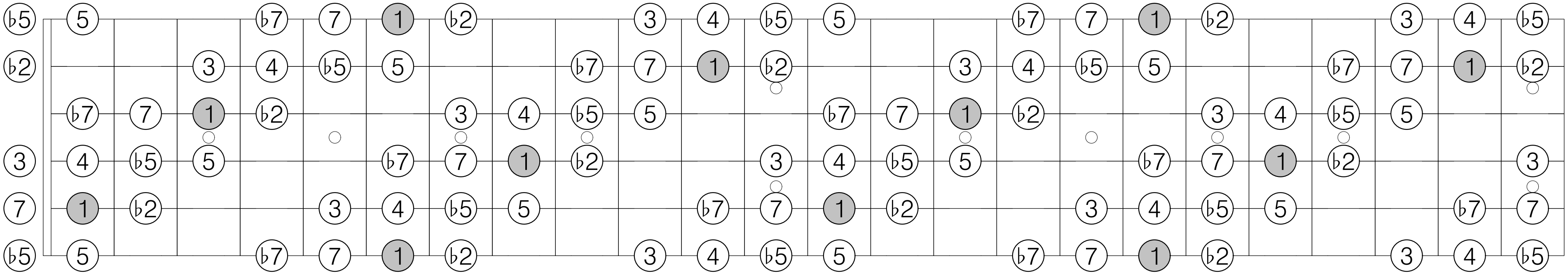

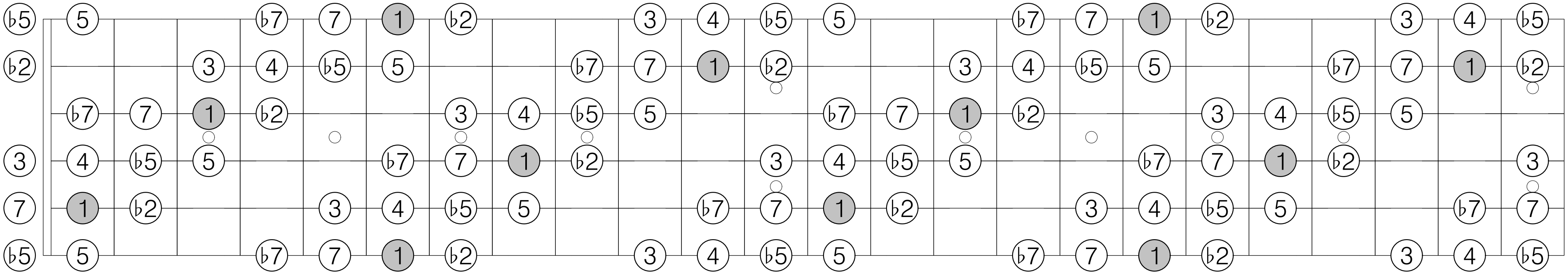

Bb transposition 3 of Mode 4 [1, 1, 3, 1]

1 ♭3 3 4 ♭5 6 ♭7 7 1 ♭3 3 4 ♭5 6 ♭7 7

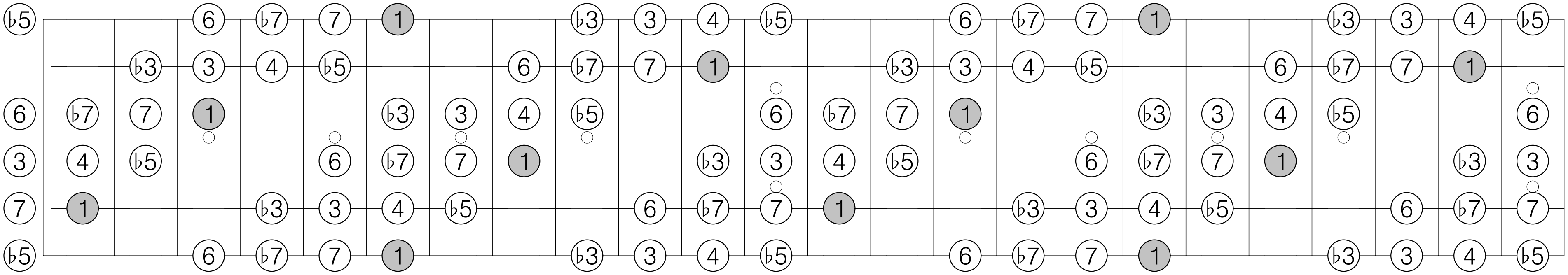

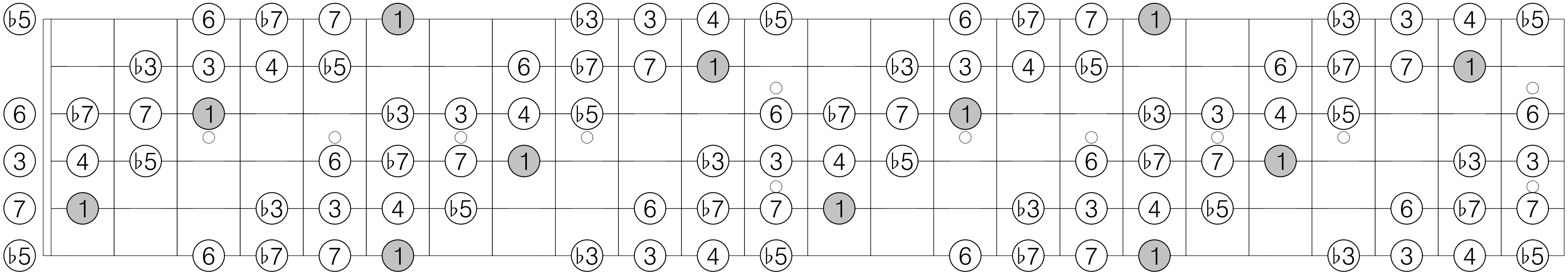

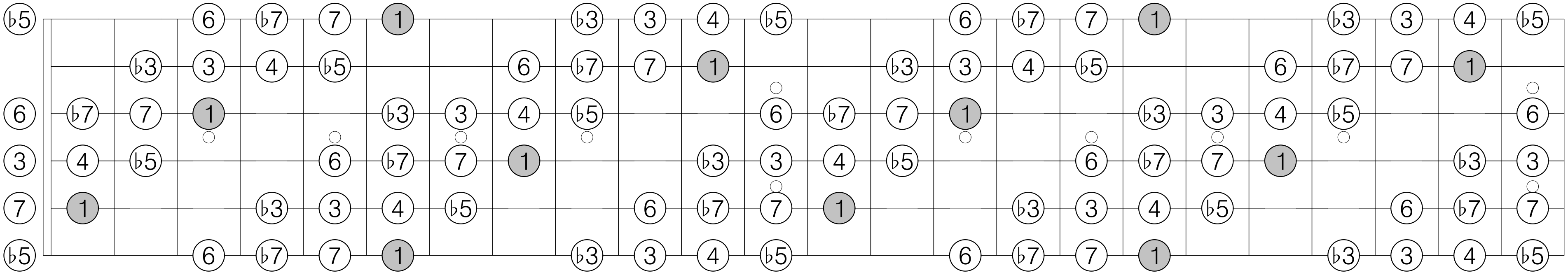

Bb transposition 4 of Mode 4 [1, 1, 3, 1]

1 ♭2 2 ♭3 ♭5 5 ♭6 6 1 ♭2 2 ♭3 ♭5 5 ♭6 6

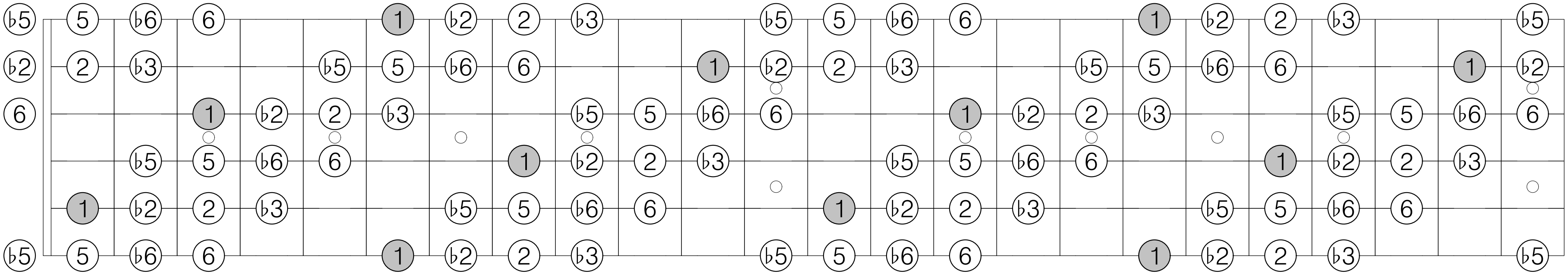

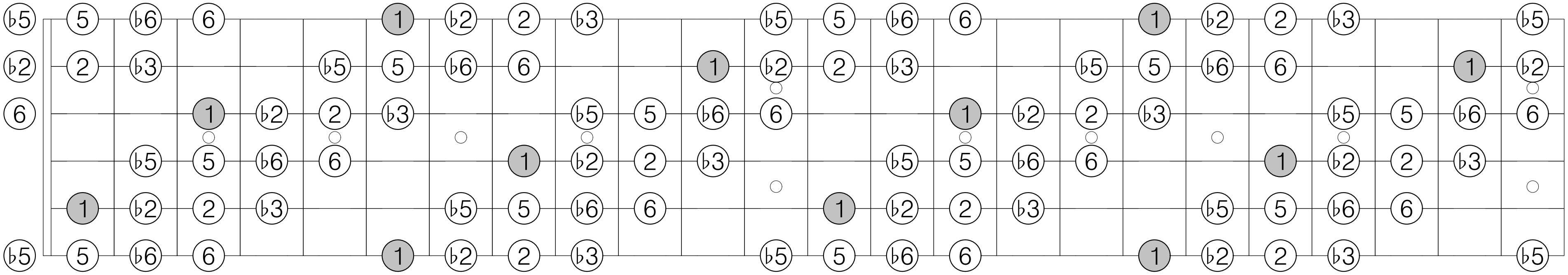

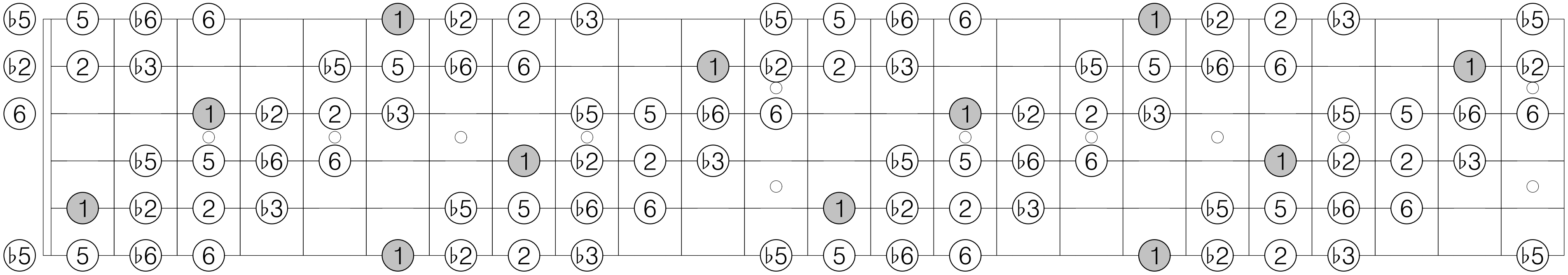

Bb transposition 1 of Mode 5 [1, 4, 1]

1 ♭2 4 ♭5 5 7 1 ♭2 4 ♭5 5 7

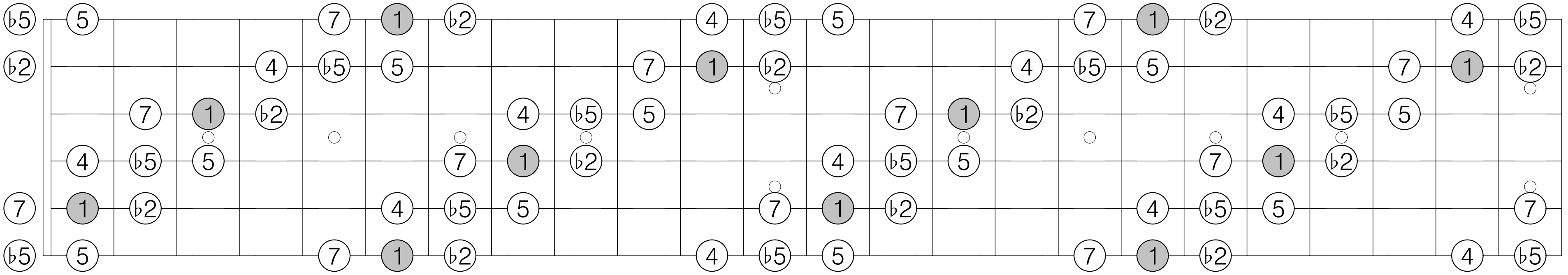

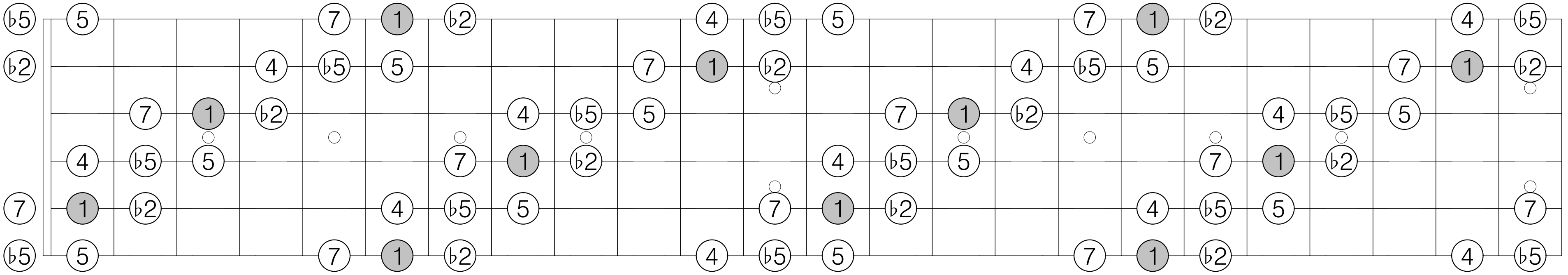

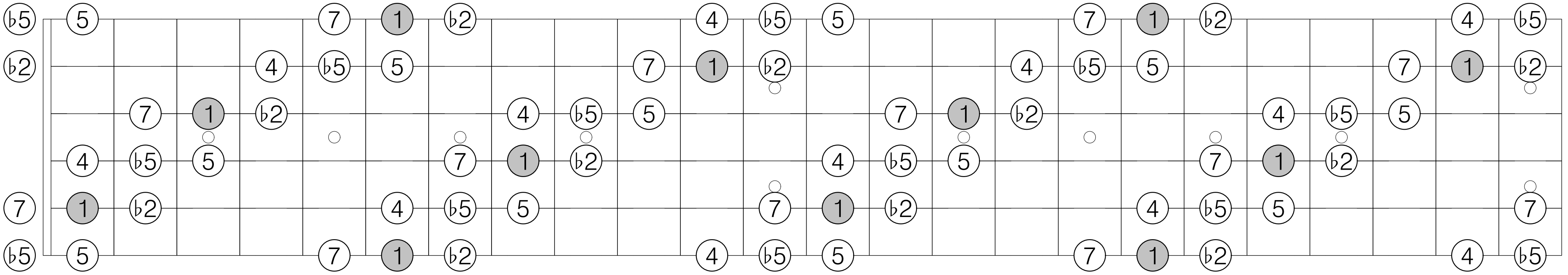

Bb transposition 2 of Mode 5 [1, 4, 1]

1 3 4 ♭5 ♭7 7 1 3 4 ♭5 ♭7 7

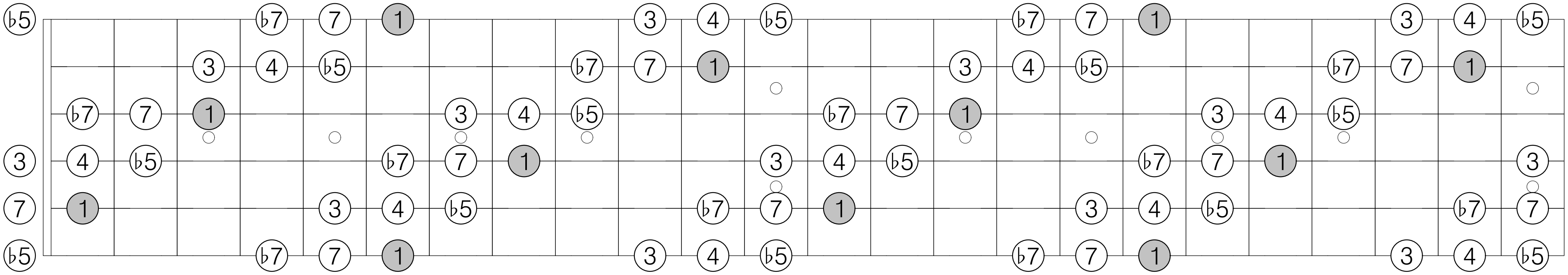

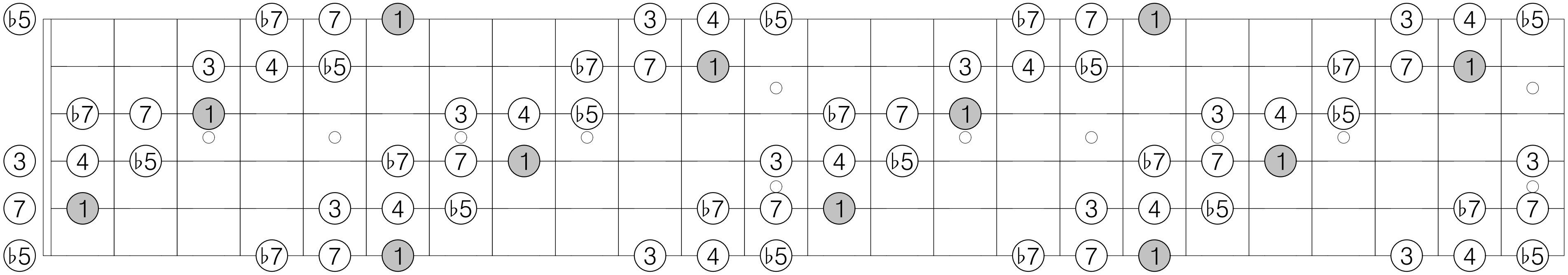

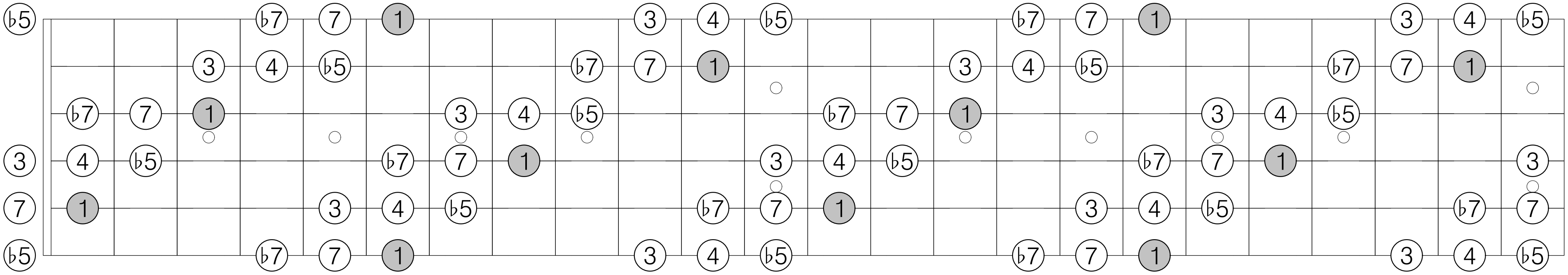

Bb transposition 3 of Mode 5 [1, 4, 1]

1 ♭2 2 ♭5 5 ♭6 1 ♭2 2 ♭5 5 ♭6

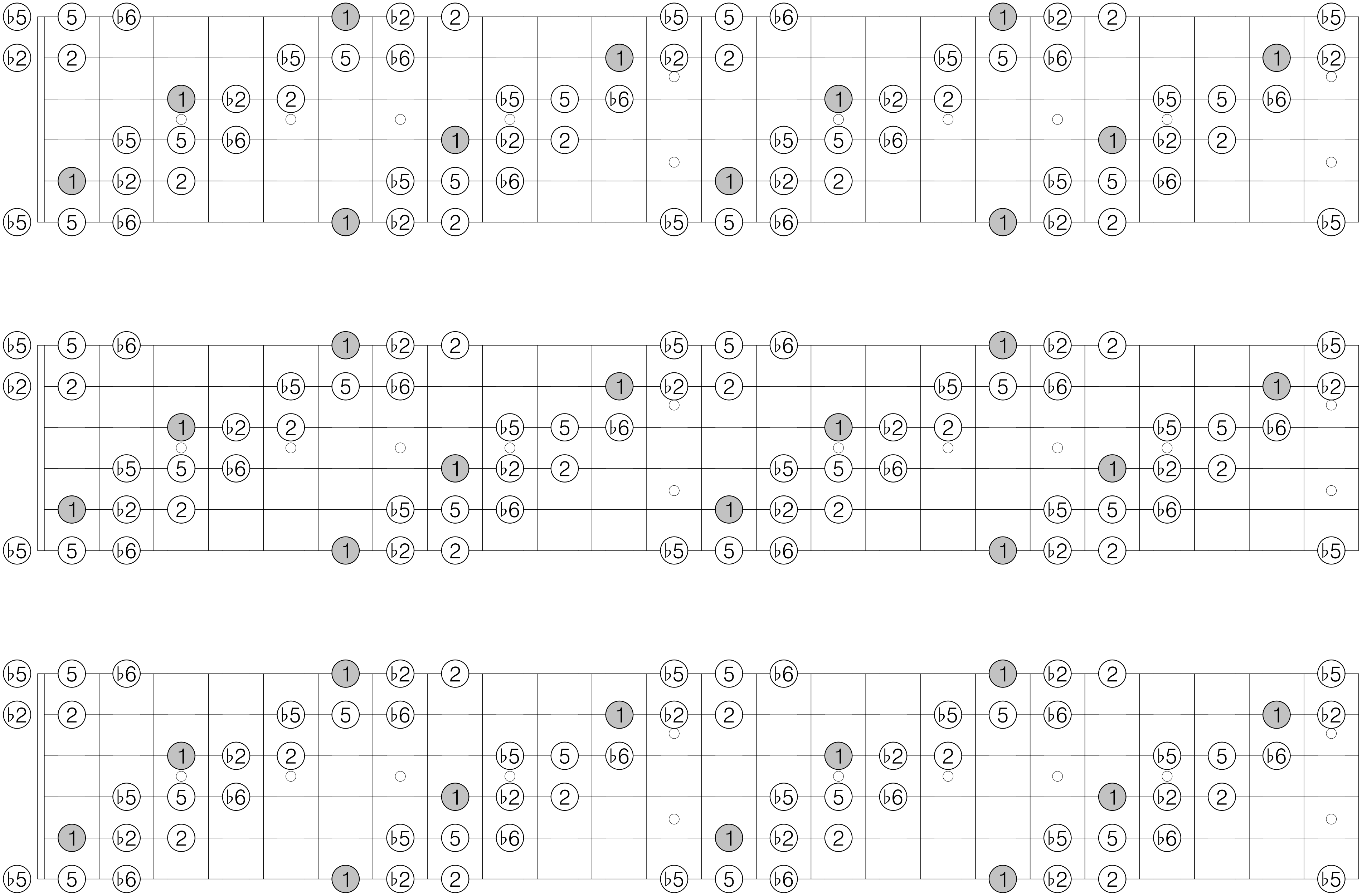

Bb transposition 1 of Mode 6 [1, 1, 2, 2]

1 ♭2 2 3 ♭5 5 ♭6 ♭7 1 ♭2 2 3 ♭5 5 ♭6 ♭7

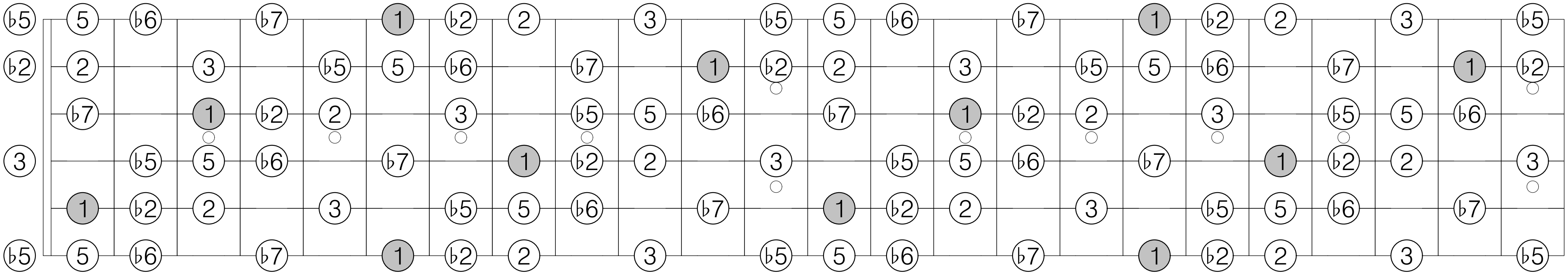

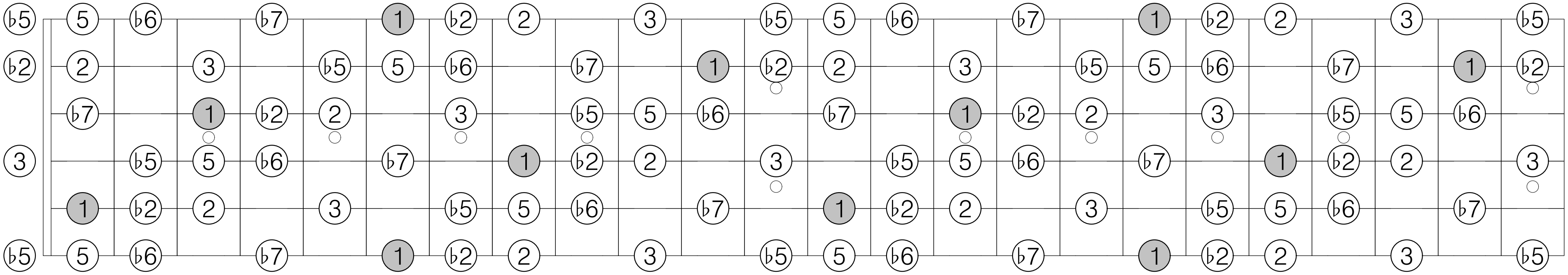

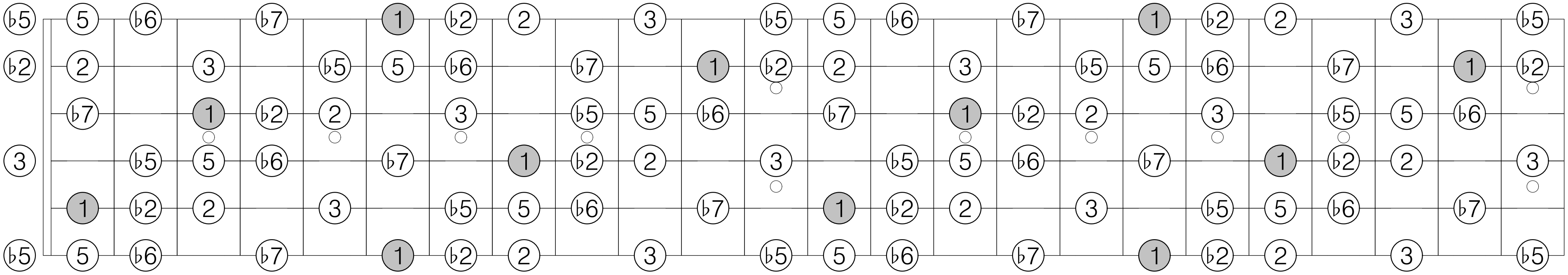

Bb transposition 2 of Mode 6 [1, 1, 2, 2]

1 ♭2 ♭3 4 ♭5 5 6 7 1 ♭2 ♭3 4 ♭5 5 6 7

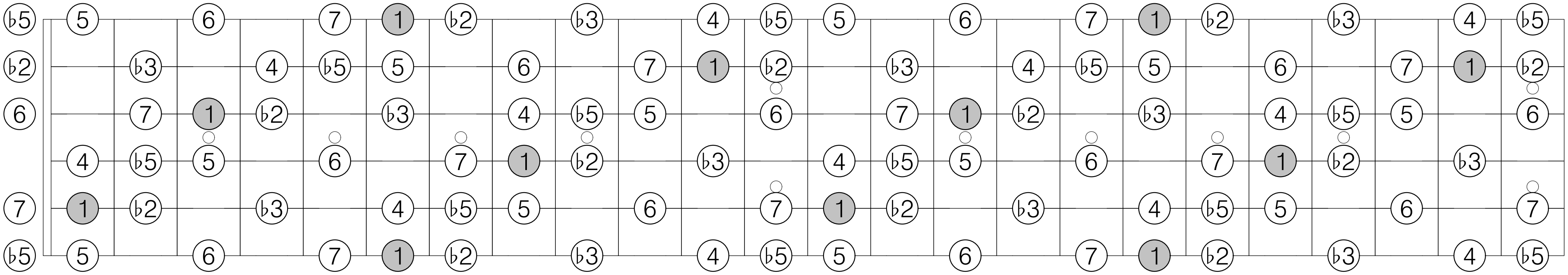

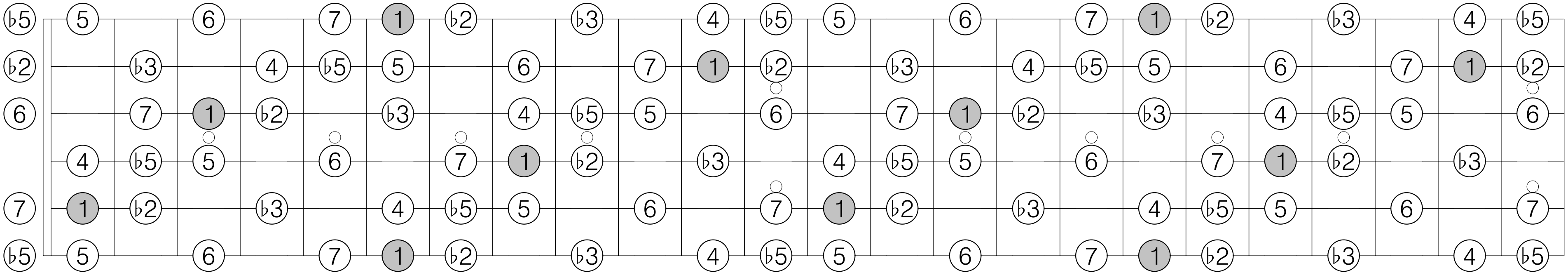

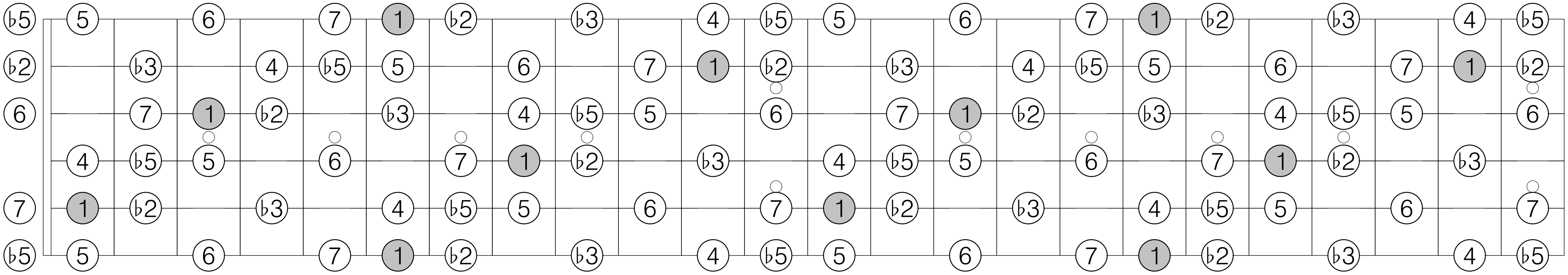

Bb transposition 3 of Mode 6 [1, 1, 2, 2]

1 2 3 4 ♭5 ♭6 ♭7 7 1 2 3 4 ♭5 ♭6 ♭7 7

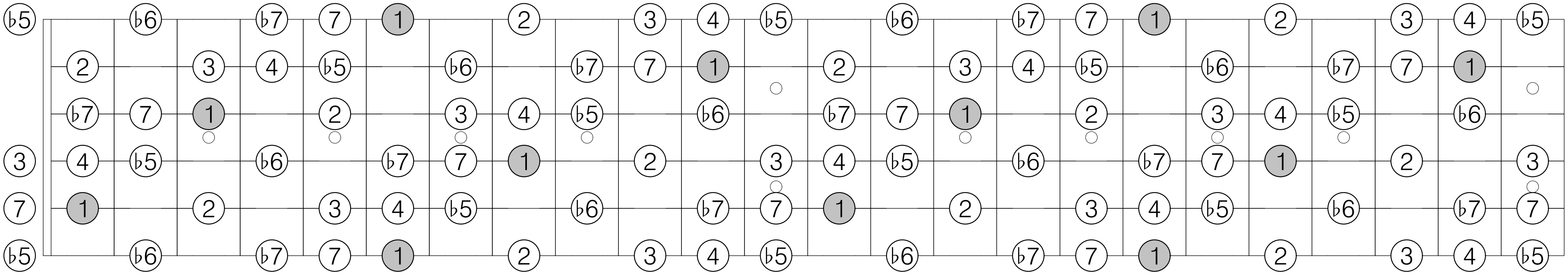

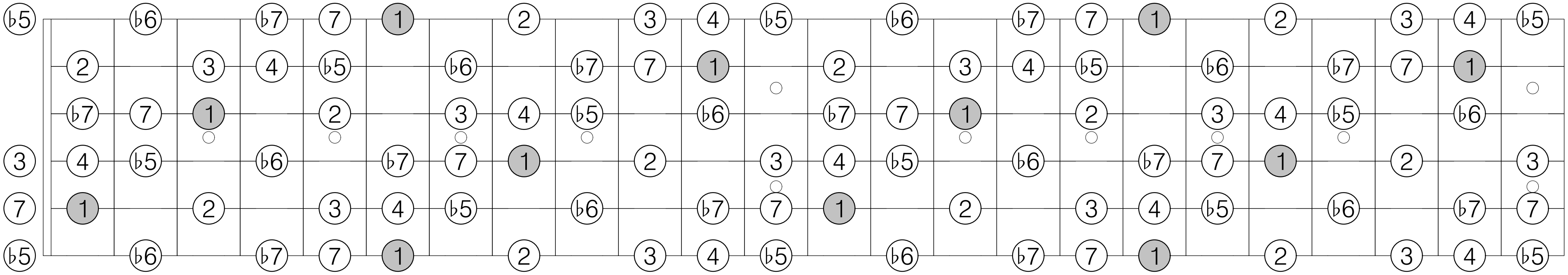

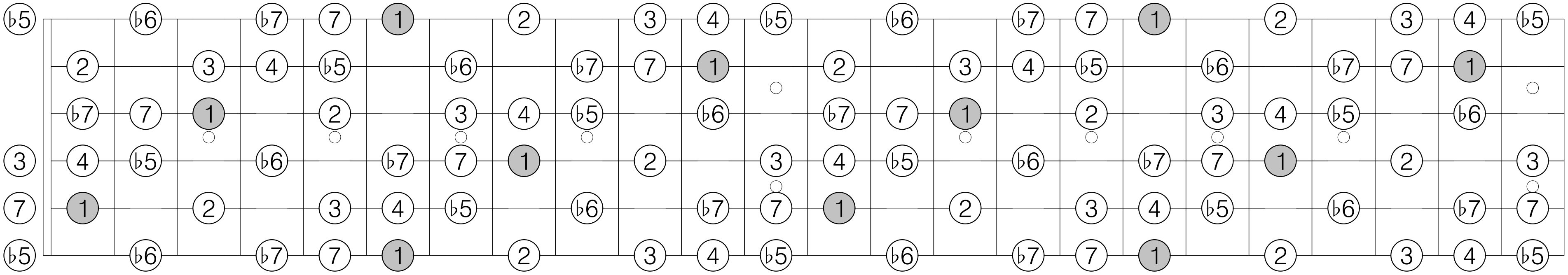

Bb transposition 4 of Mode 6 [1, 1, 2, 2]

1 2 ♭3 3 ♭5 ♭6 6 ♭7 1 2 ♭3 3 ♭5 ♭6 6 ♭7

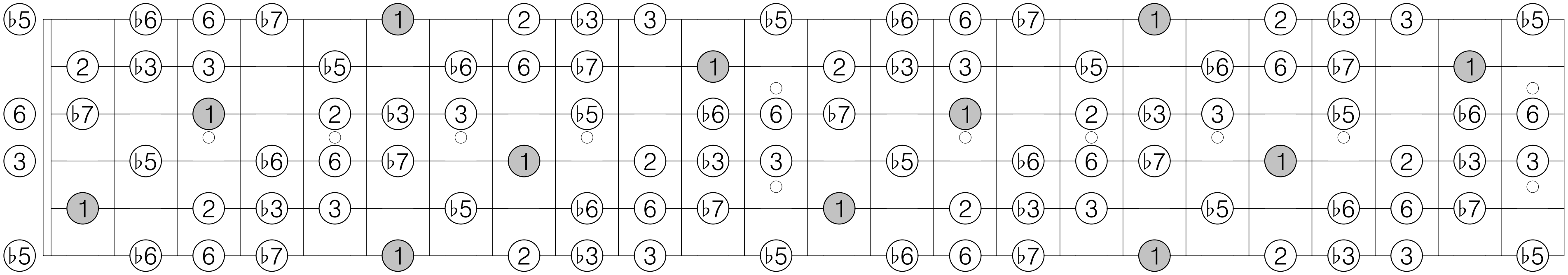

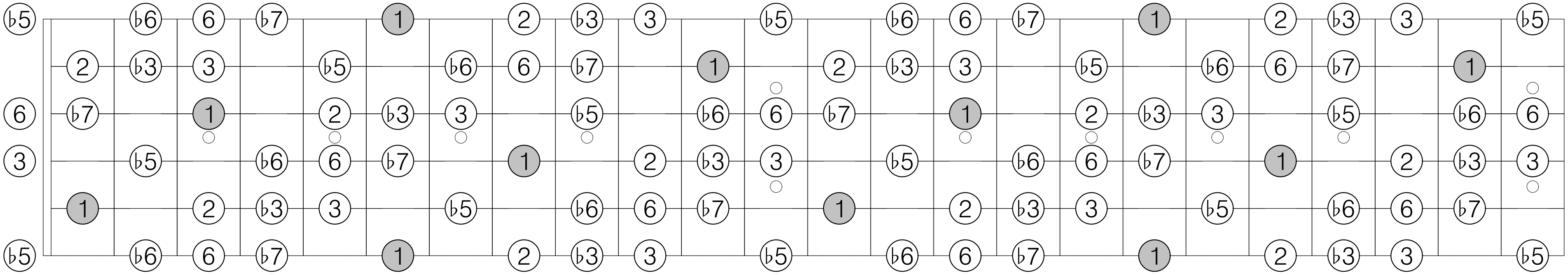

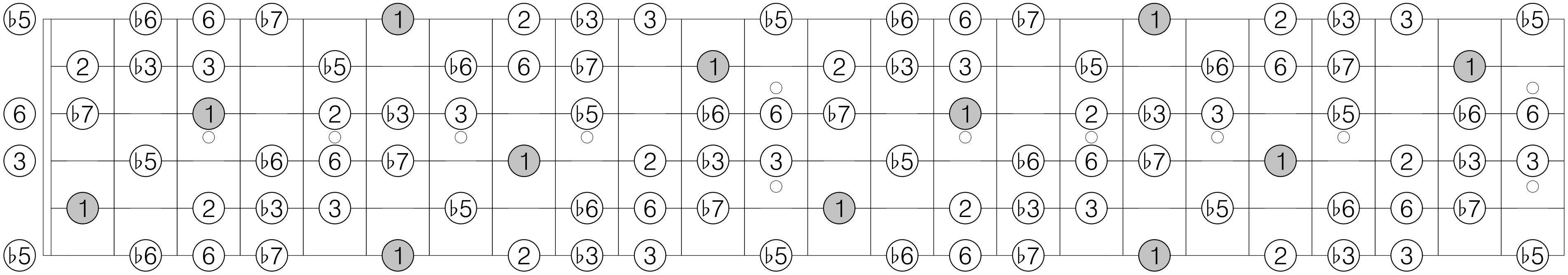

Bb transposition 1 of Mode 7 [1, 1, 1, 2, 1]

1 ♭2 2 ♭3 4 ♭5 5 ♭6 6 7 1 ♭2 2 ♭3 4 ♭5 5 ♭6 6 7

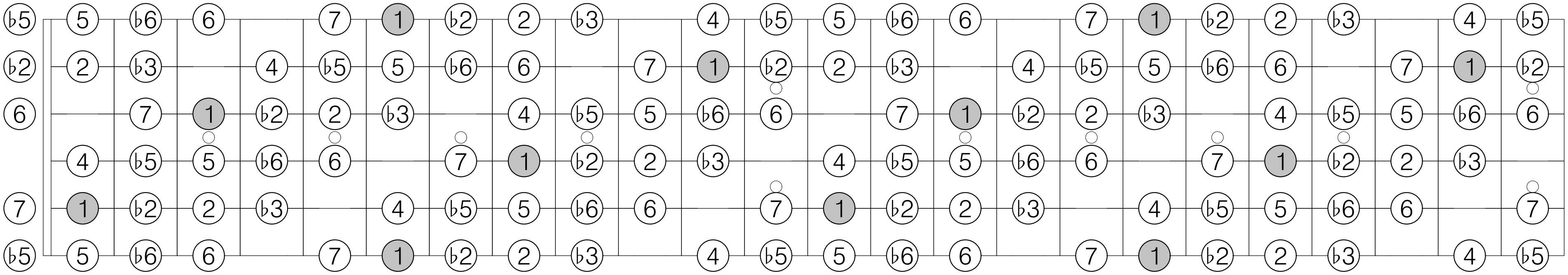

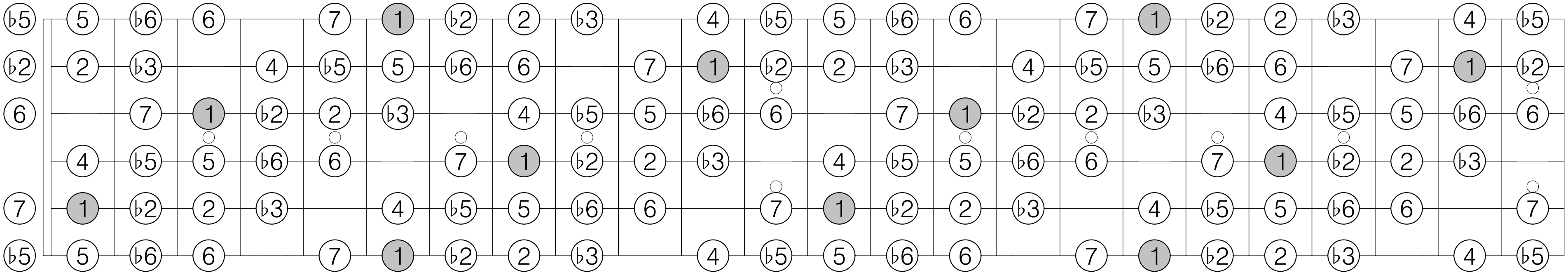

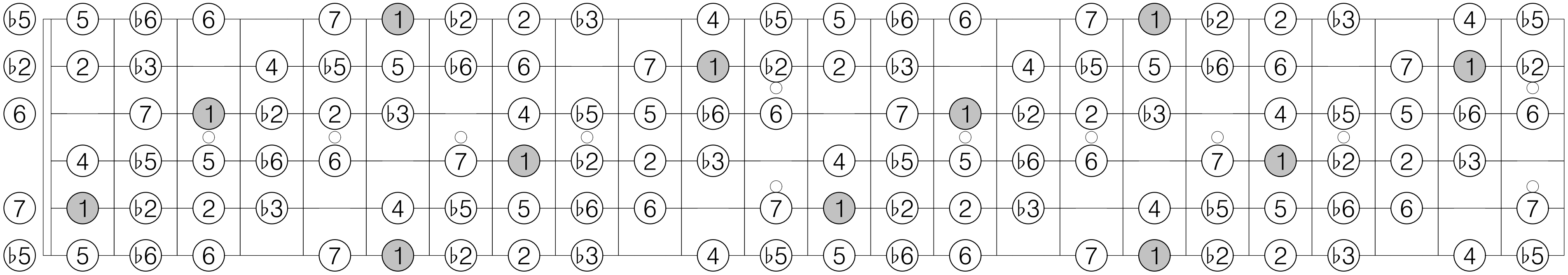

Bb transposition 2 of Mode 7 [1, 1, 1, 2, 1]

1 ♭2 2 3 4 ♭5 5 ♭6 ♭7 7 1 ♭2 2 3 4 ♭5 5 ♭6 ♭7 7

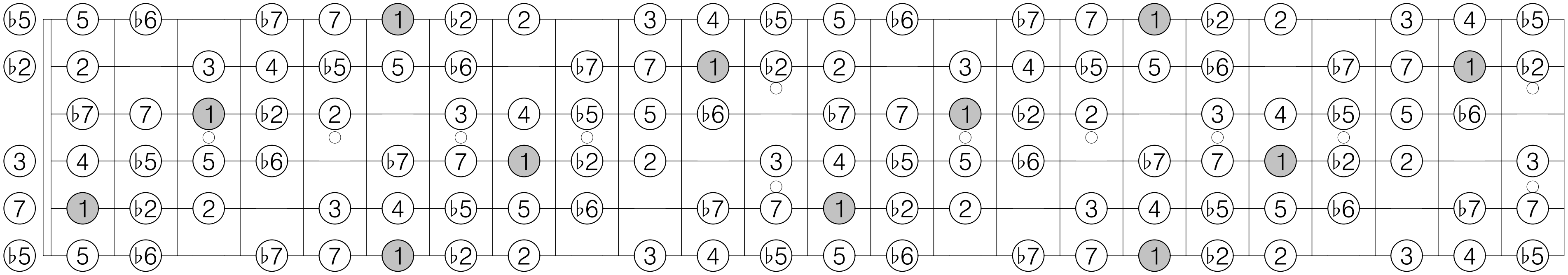

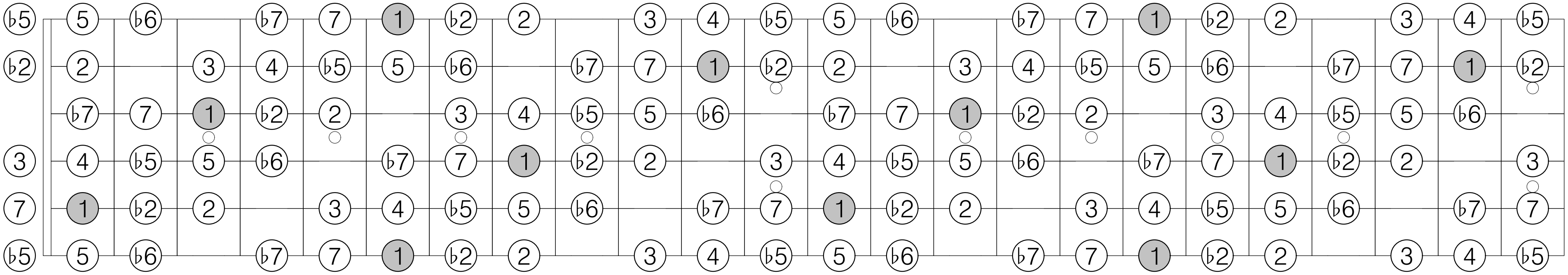

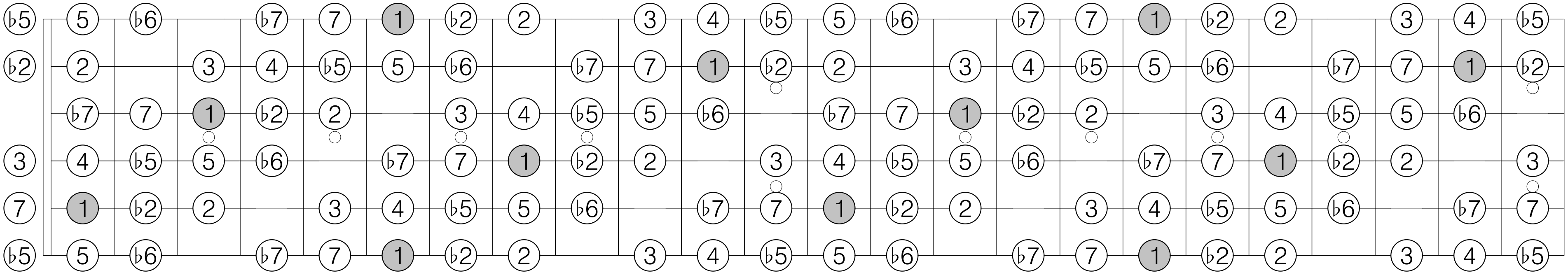

Bb transposition 3 of Mode 7 [1, 1, 1, 2, 1]

1 ♭2 ♭3 3 4 ♭5 5 6 ♭7 7 1 ♭2 ♭3 3 4 ♭5 5 6 ♭7 7

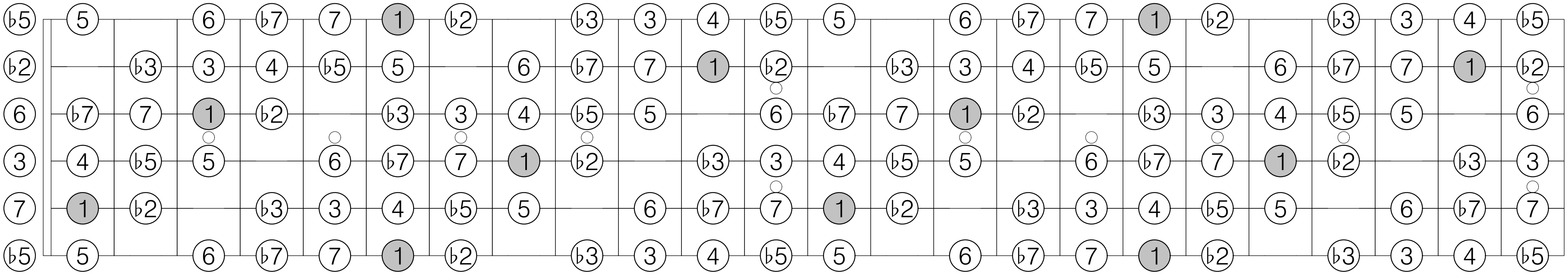

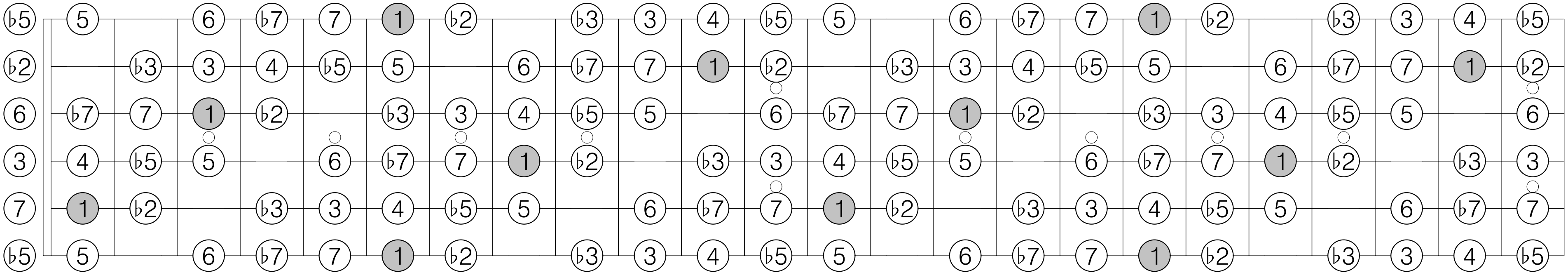

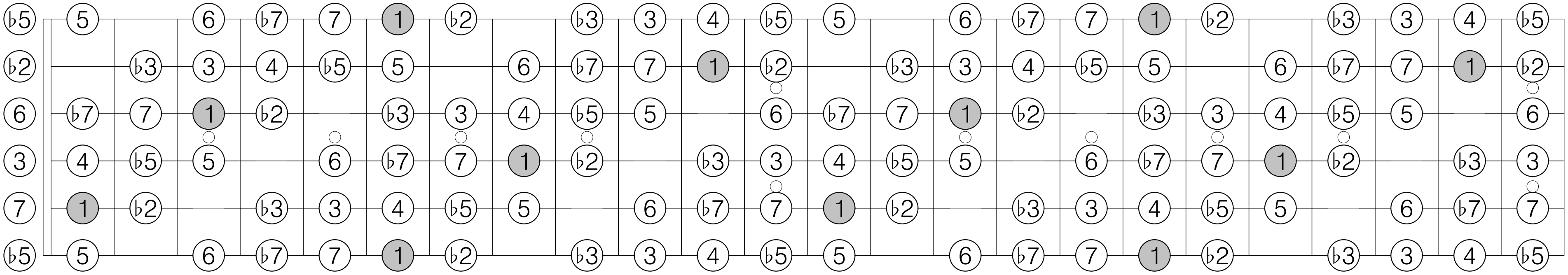

Bb transposition 4 of Mode 7 [1, 1, 1, 2, 1]

1 2 ♭3 3 4 ♭5 ♭6 6 ♭7 7 1 2 ♭3 3 4 ♭5 ♭6 6 ♭7 7

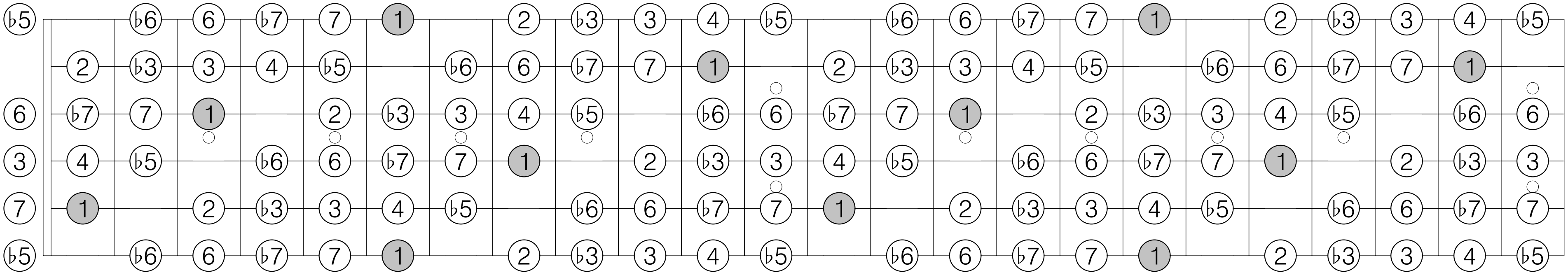

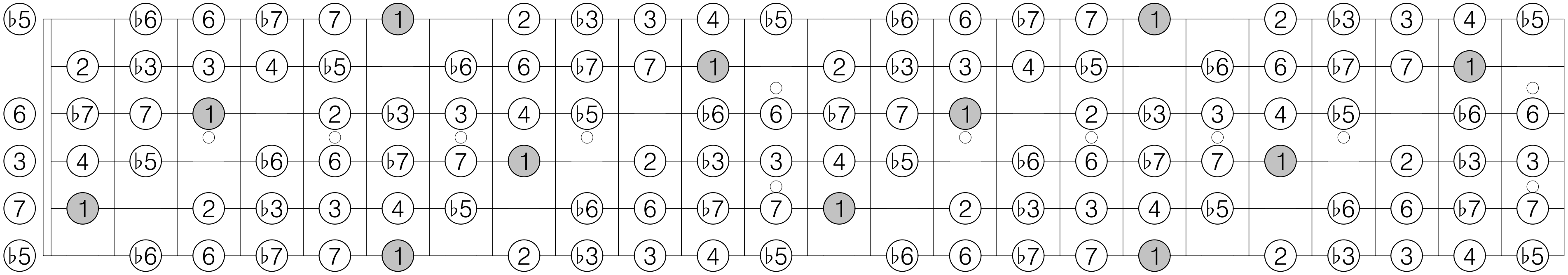

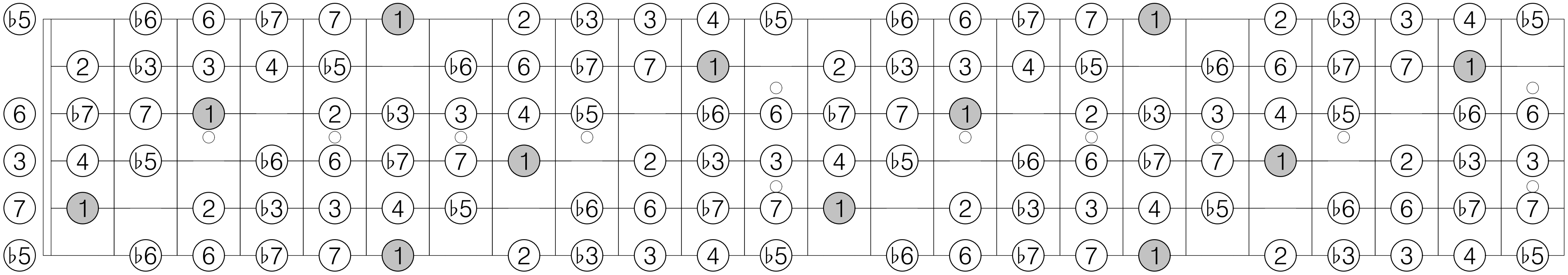

Bb transposition 5 of Mode 7 [1, 1, 1, 2, 1]

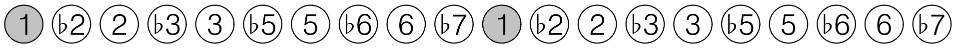

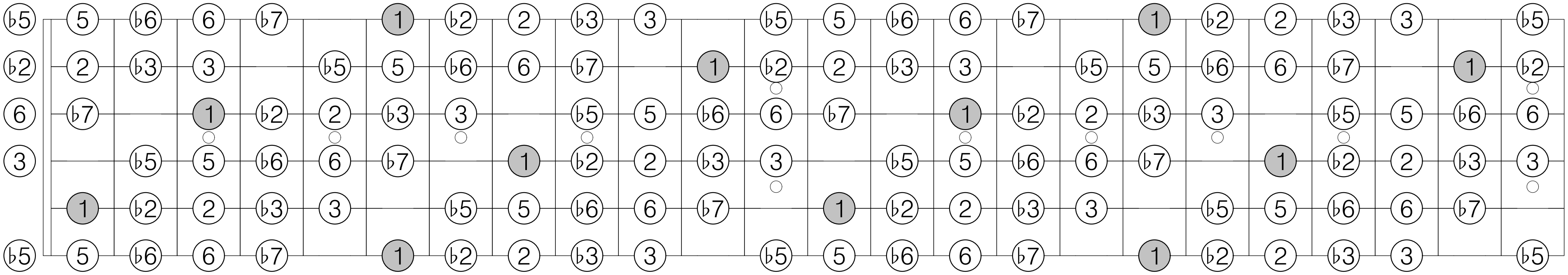

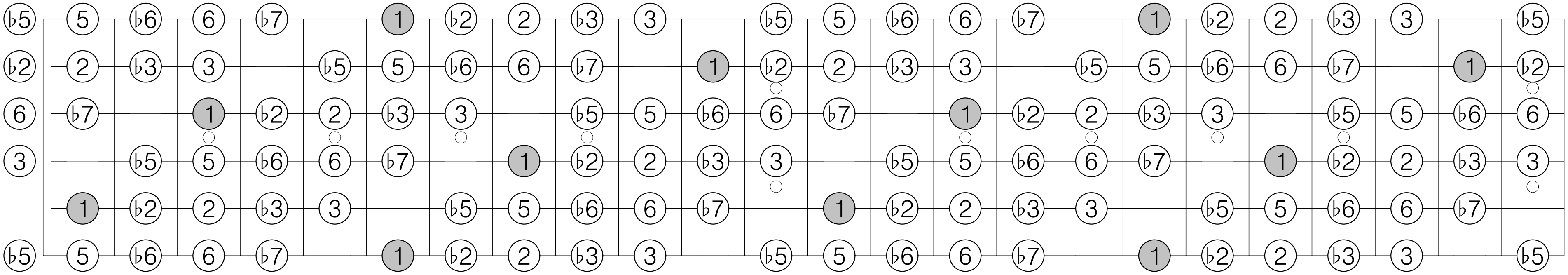

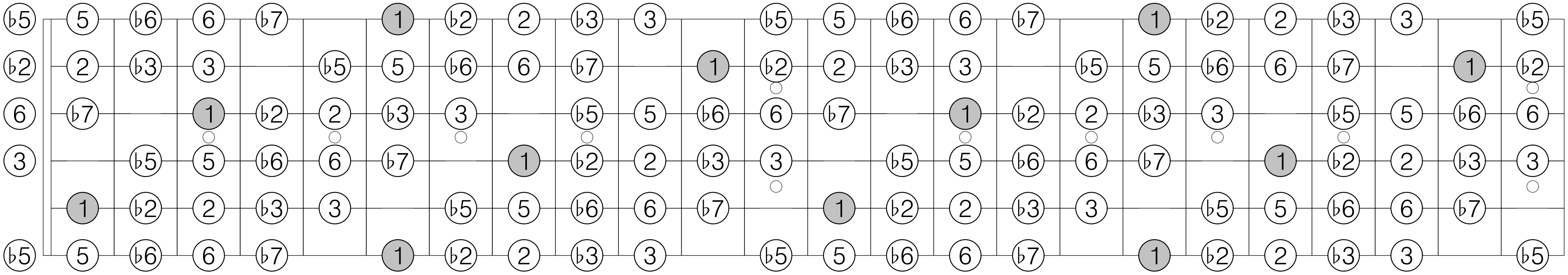

B transposition 1 of Mode 1 [2]

1 2 3 ♭5 ♭6 ♭7 1 2 3 ♭5 ♭6 ♭7

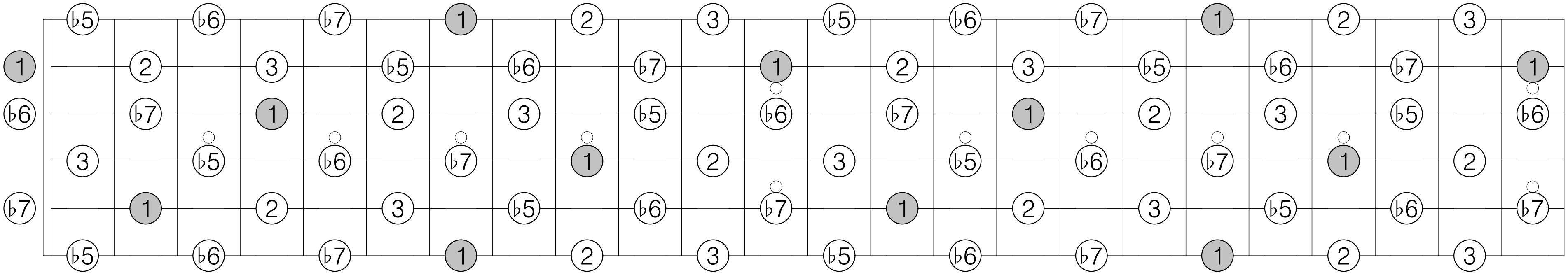

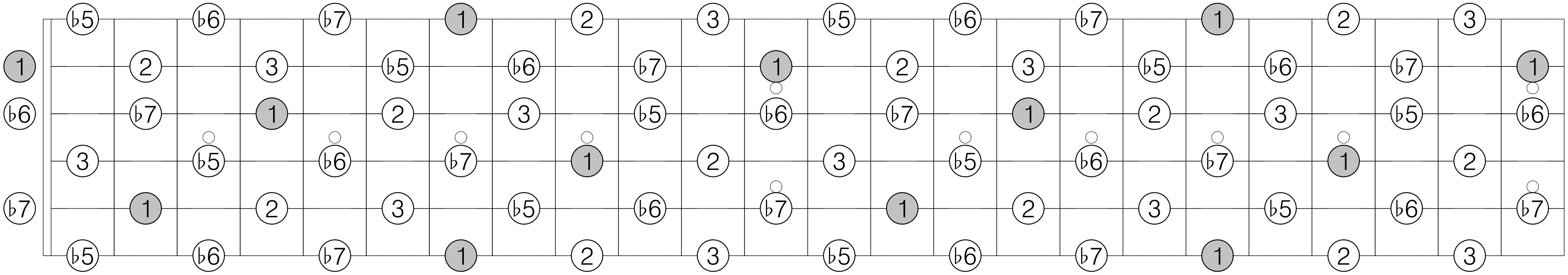

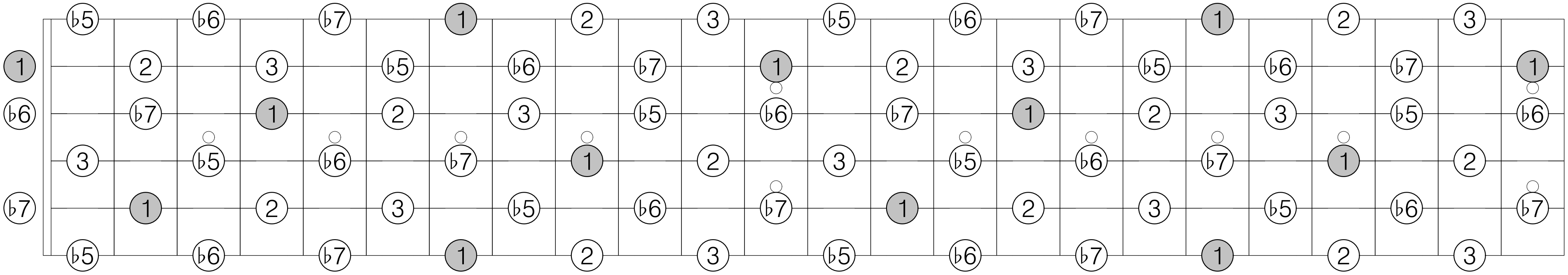

B transposition 1 of Mode 2 [1, 2]

1 ♭2 ♭3 3 ♭5 5 6 ♭7 1 ♭2 ♭3 3 ♭5 5 6 ♭7

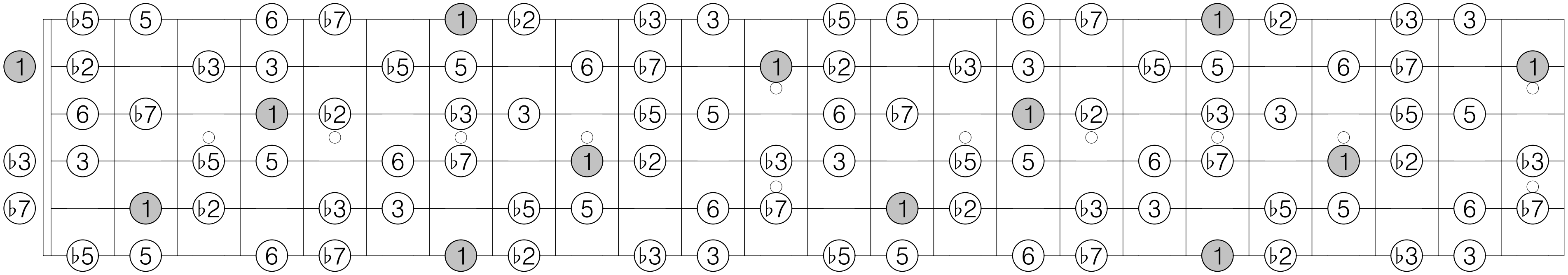

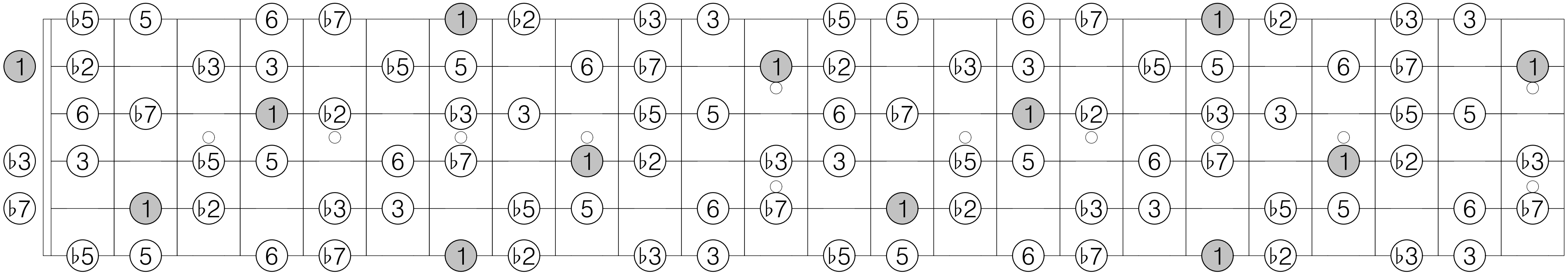

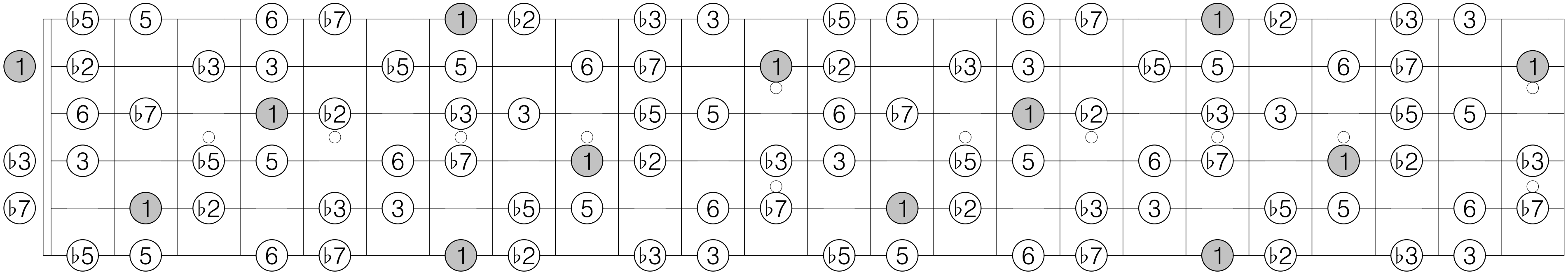

B transposition 2 of Mode 2 [1, 2]

1 2 ♭3 4 ♭5 ♭6 6 7 1 2 ♭3 4 ♭5 ♭6 6 7

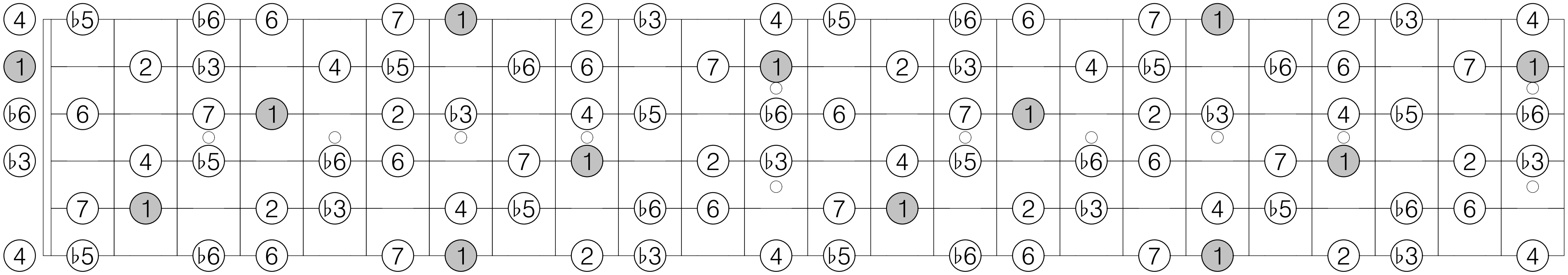

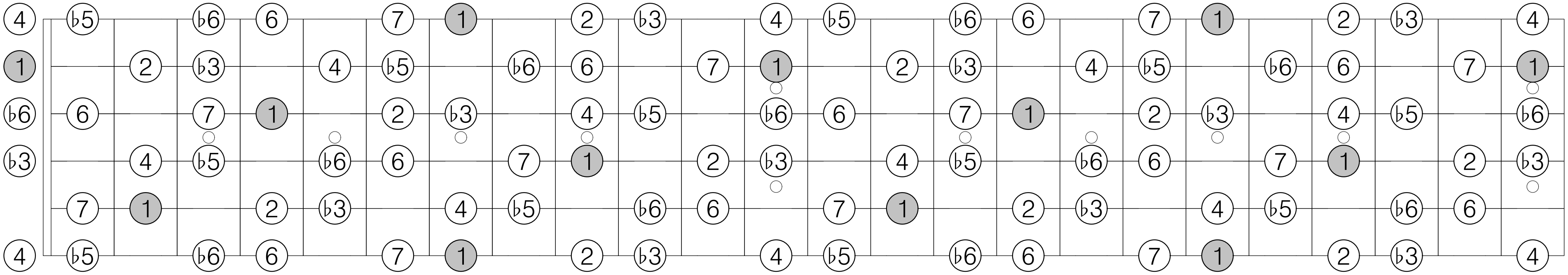

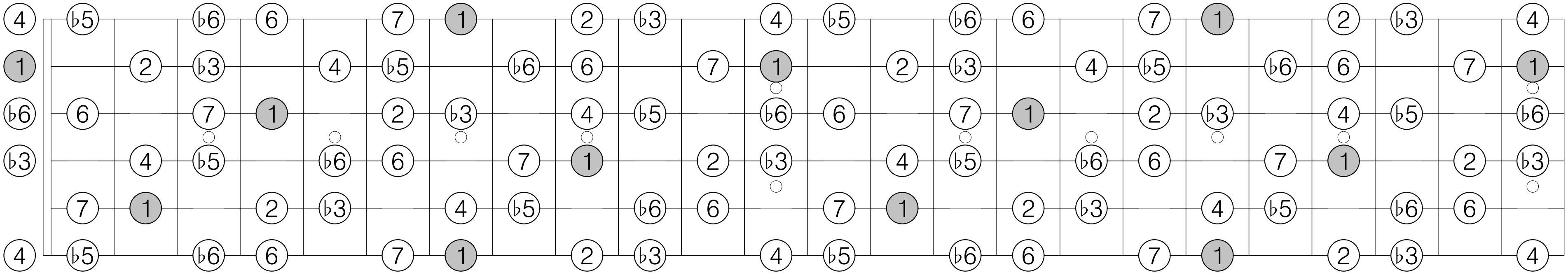

B transposition 1 of Mode 3 [1, 1, 2]

1 ♭2 2 3 4 ♭5 ♭6 6 ♭7 1 ♭2 2 3 4 ♭5 ♭6 6 ♭7

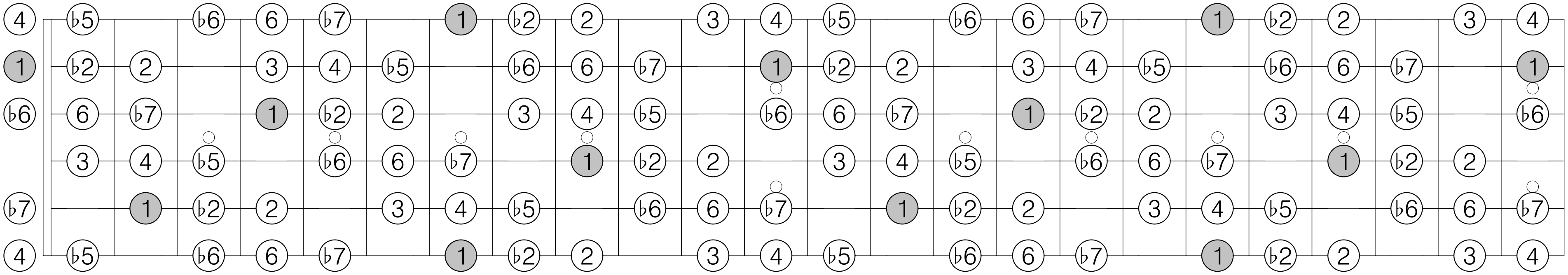

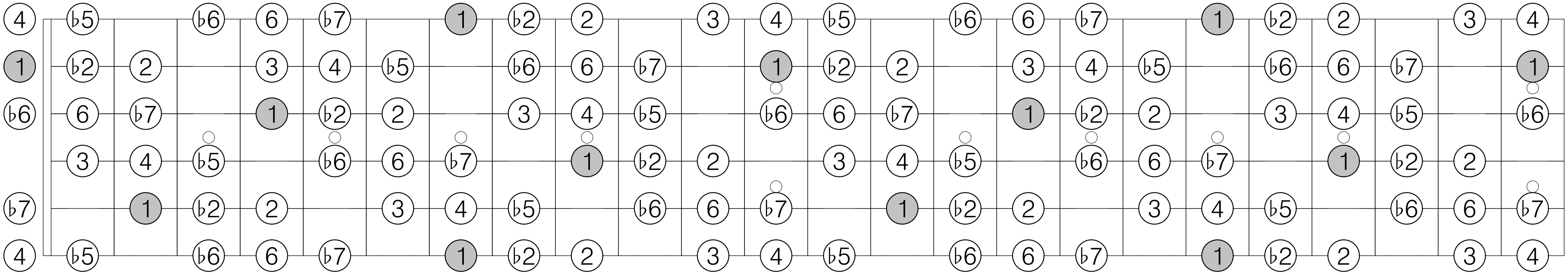

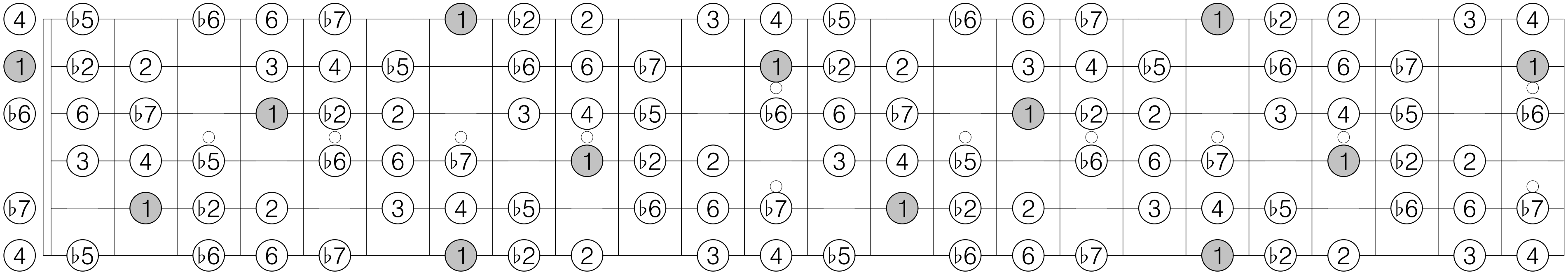

B transposition 2 of Mode 3 [1, 1, 2]

1 ♭2 ♭3 3 4 5 ♭6 6 7 1 ♭2 ♭3 3 4 5 ♭6 6 7

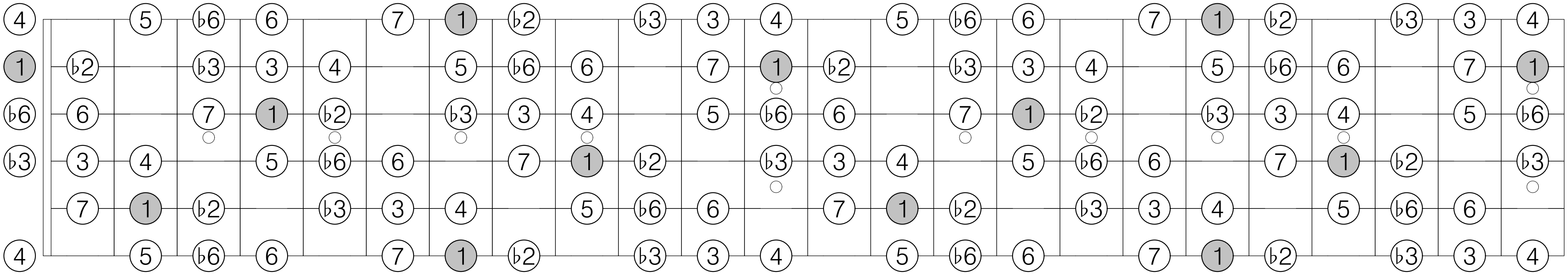

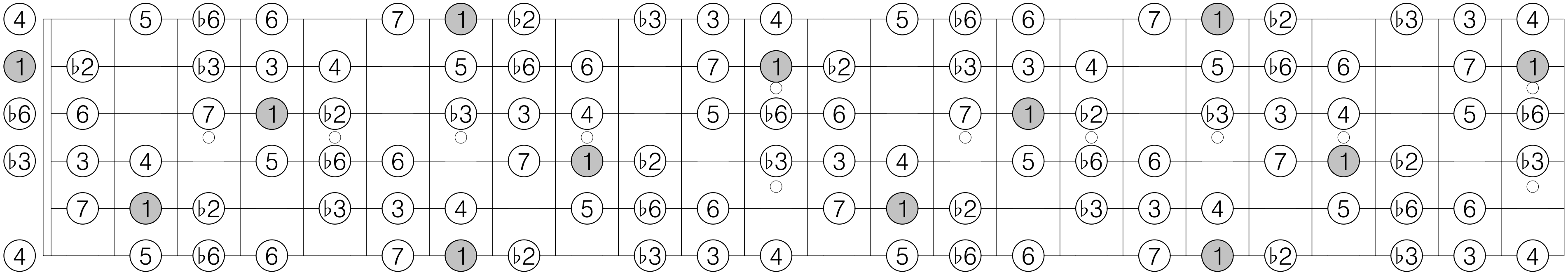

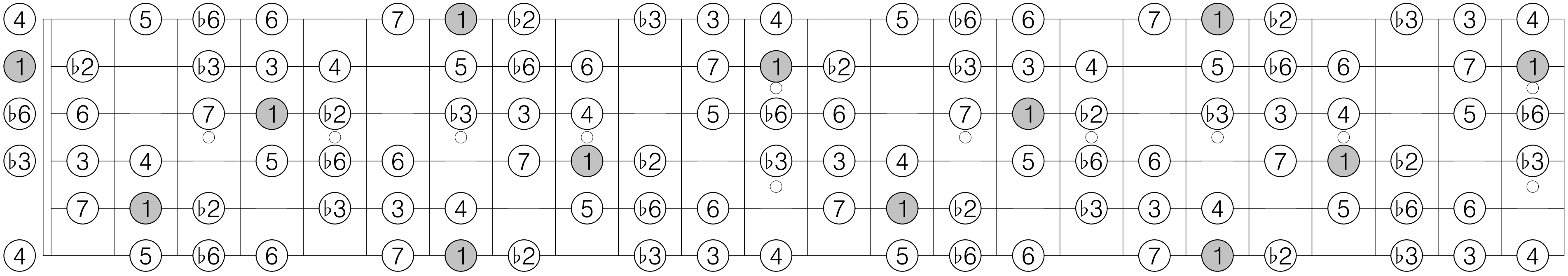

B transposition 3 of Mode 3 [1, 1, 2]

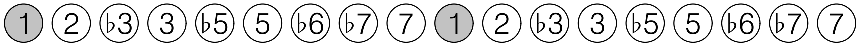

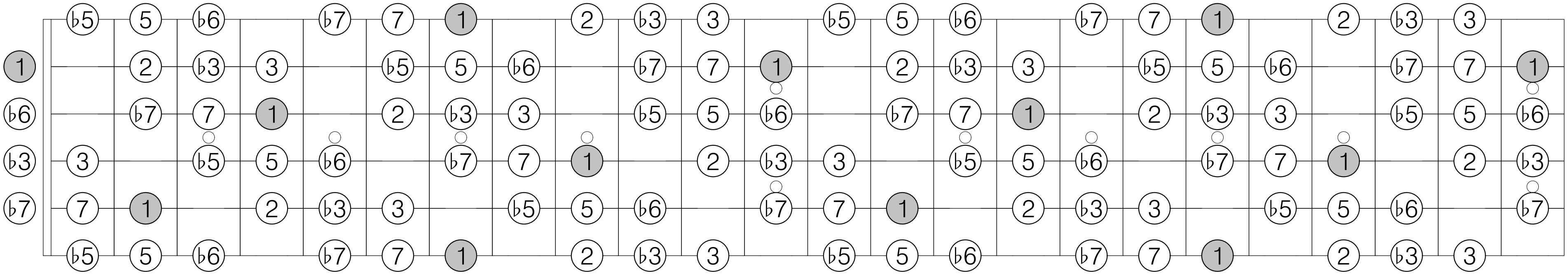

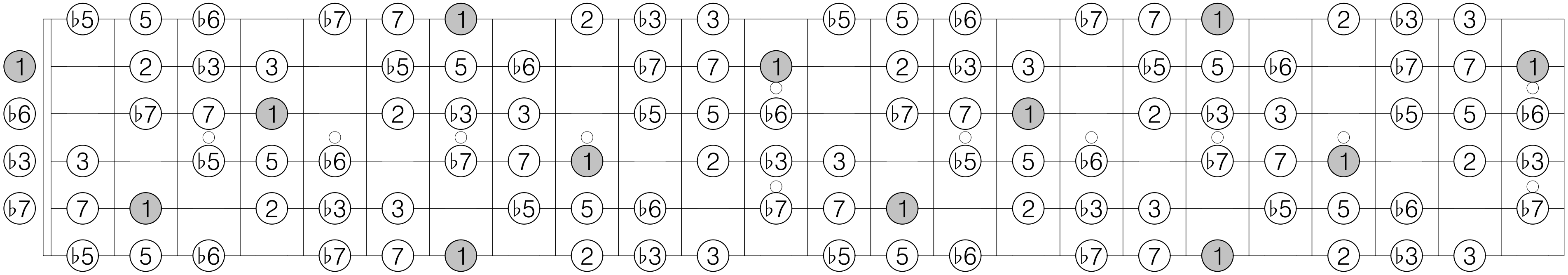

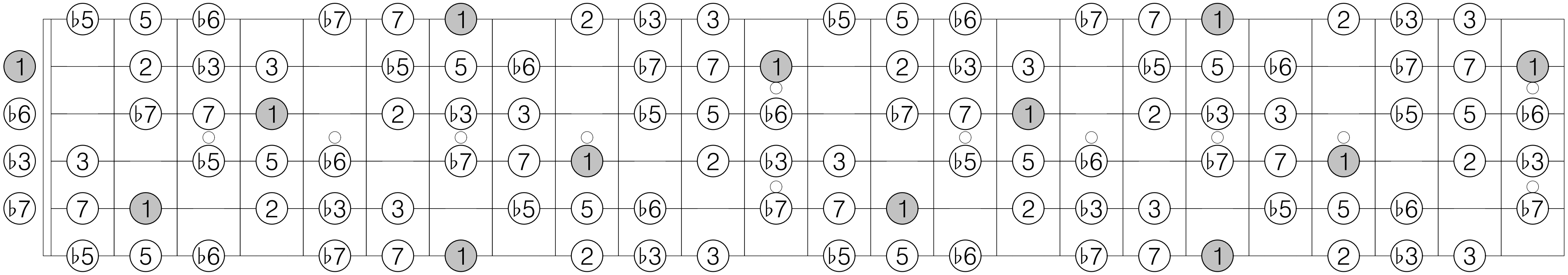

B transposition 1 of Mode 4 [1, 1, 3, 1]

1 ♭2 2 4 ♭5 5 ♭6 7 1 ♭2 2 4 ♭5 5 ♭6 7

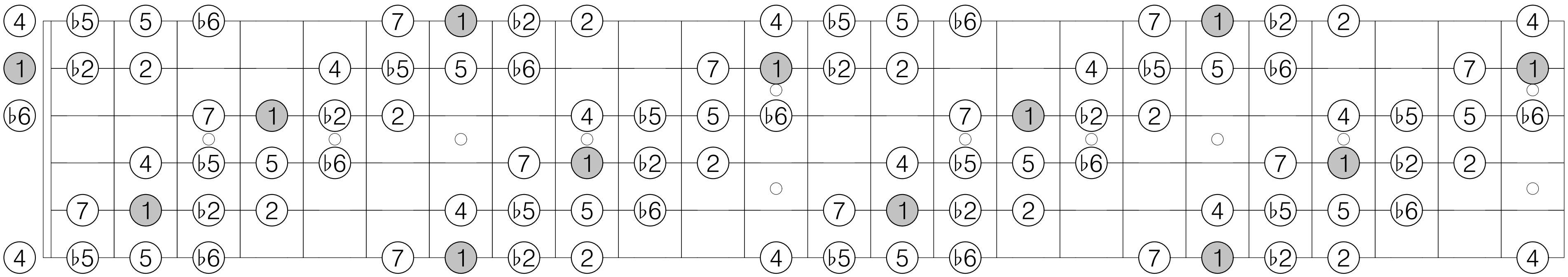

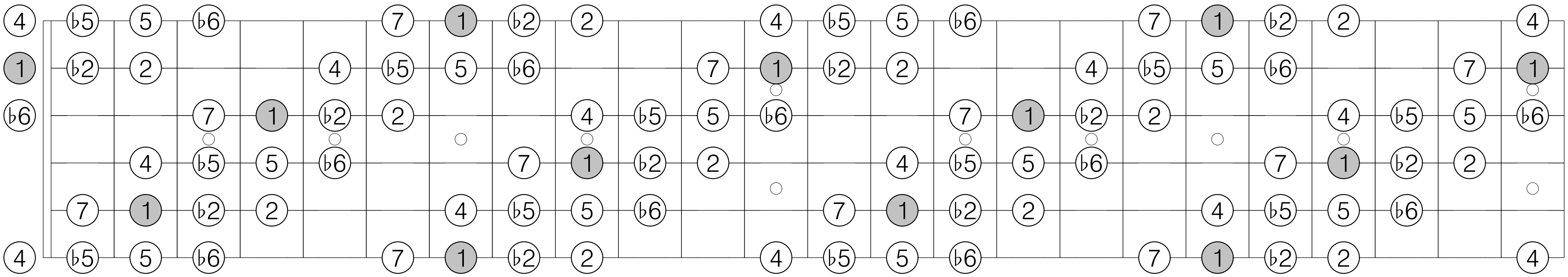

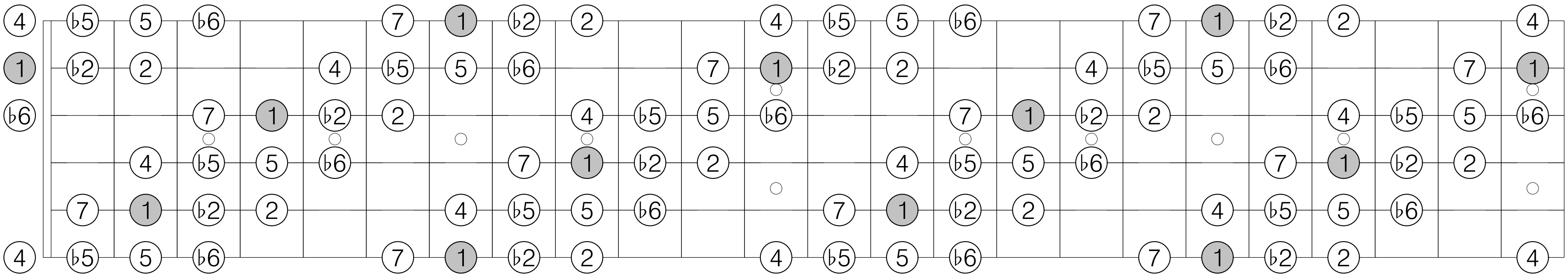

B transposition 2 of Mode 4 [1, 1, 3, 1]

1 ♭2 3 4 ♭5 5 ♭7 7 1 ♭2 3 4 ♭5 5 ♭7 7

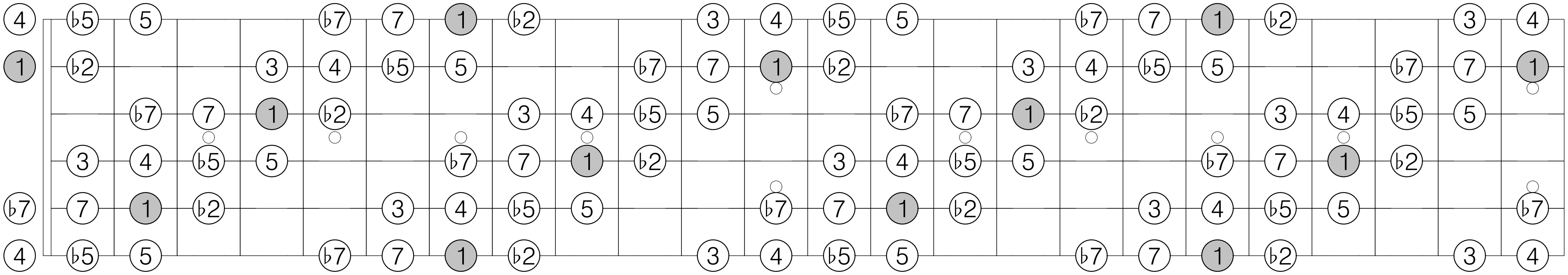

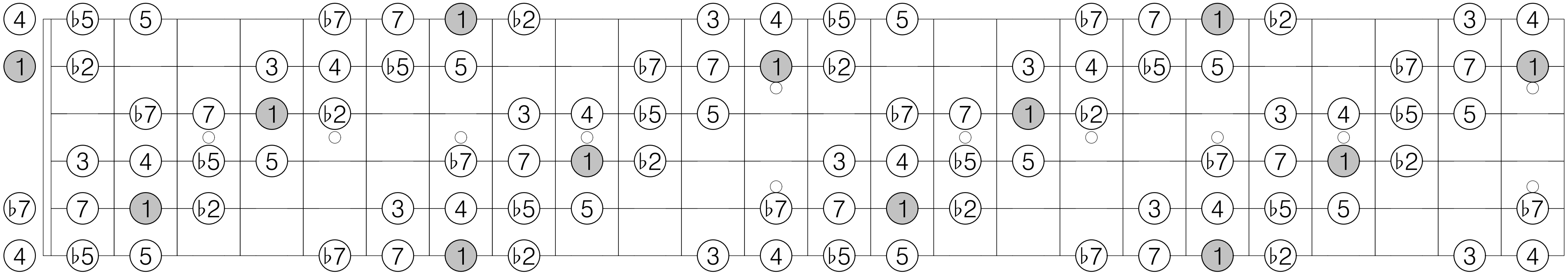

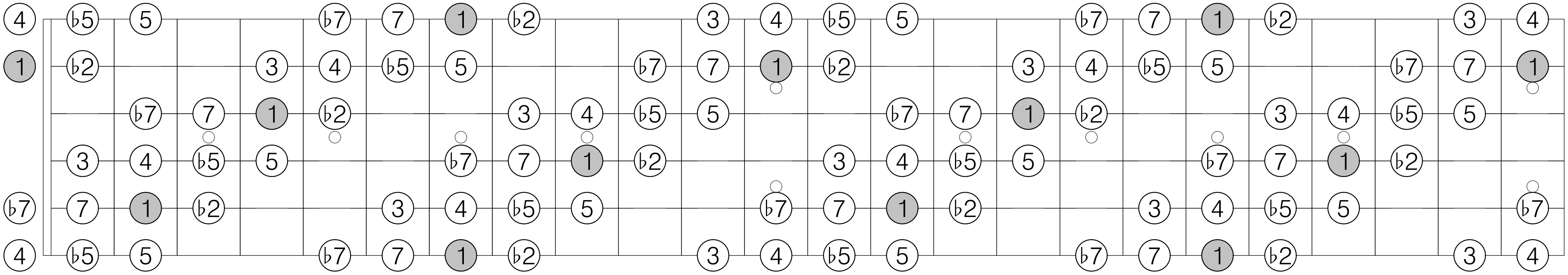

B transposition 3 of Mode 4 [1, 1, 3, 1]

1 ♭3 3 4 ♭5 6 ♭7 7 1 ♭3 3 4 ♭5 6 ♭7 7

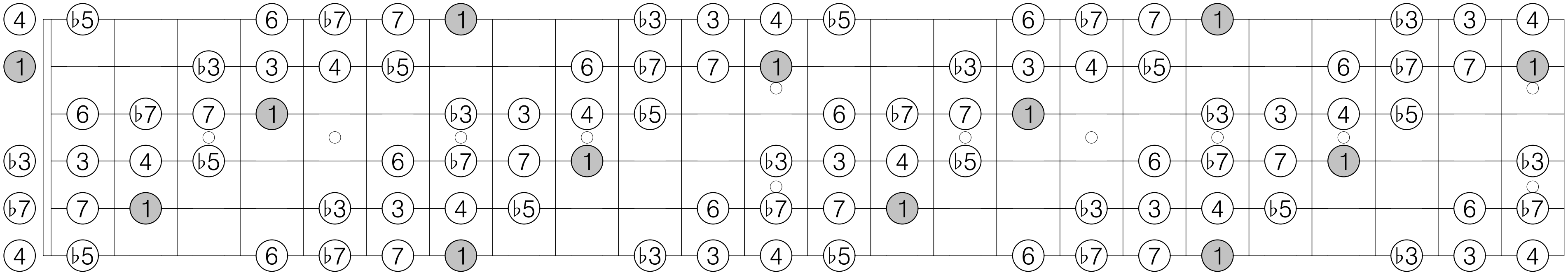

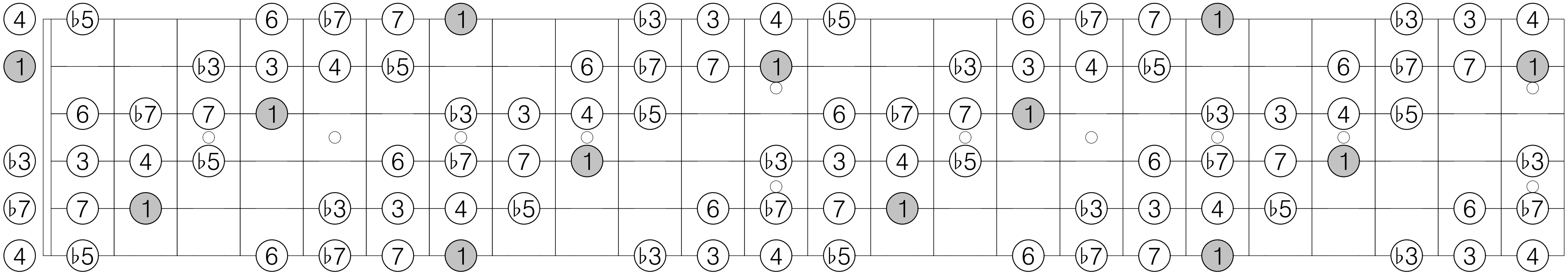

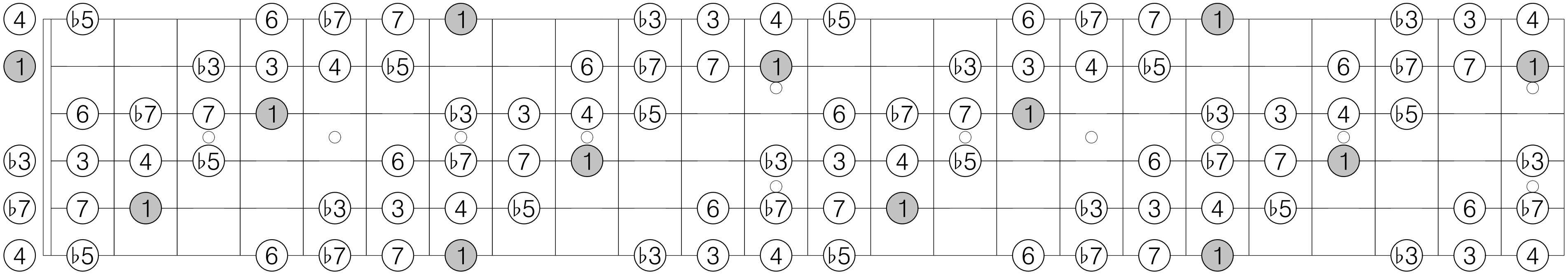

B transposition 4 of Mode 4 [1, 1, 3, 1]

1 ♭2 2 ♭3 ♭5 5 ♭6 6 1 ♭2 2 ♭3 ♭5 5 ♭6 6

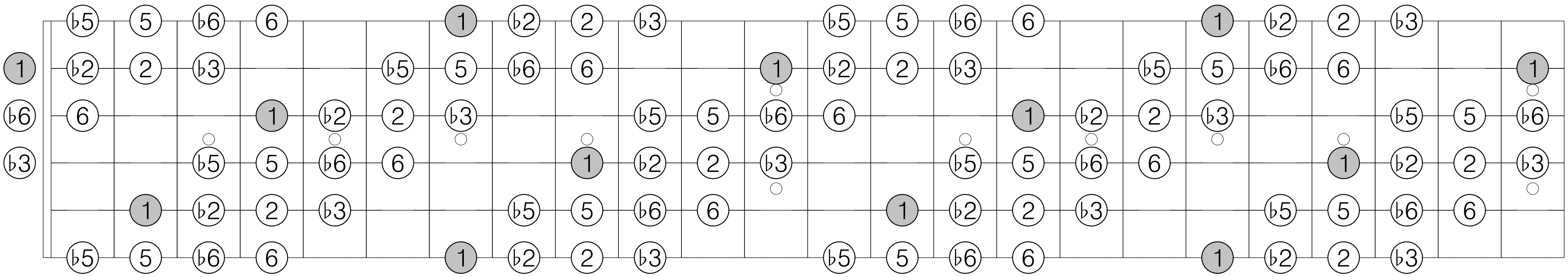

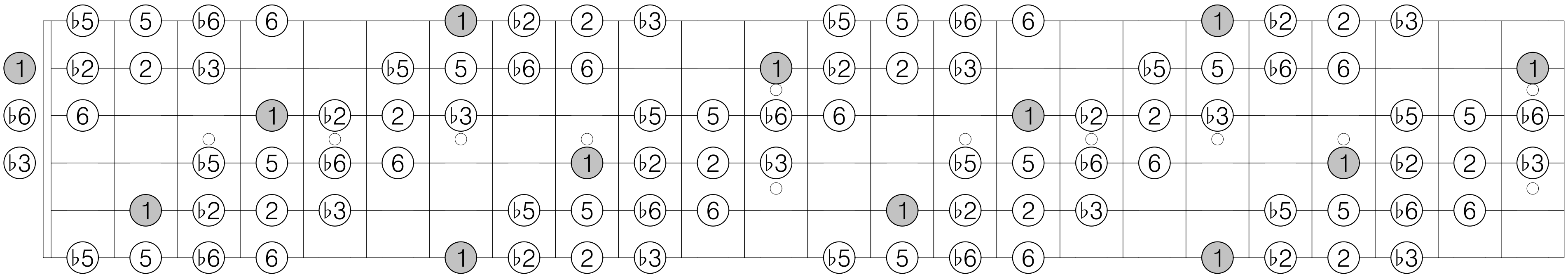

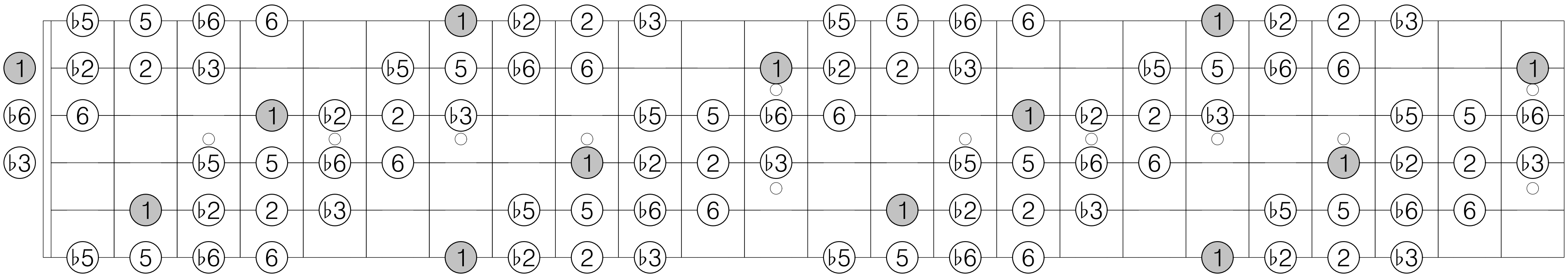

B transposition 1 of Mode 5 [1, 4, 1]

1 ♭2 4 ♭5 5 7 1 ♭2 4 ♭5 5 7

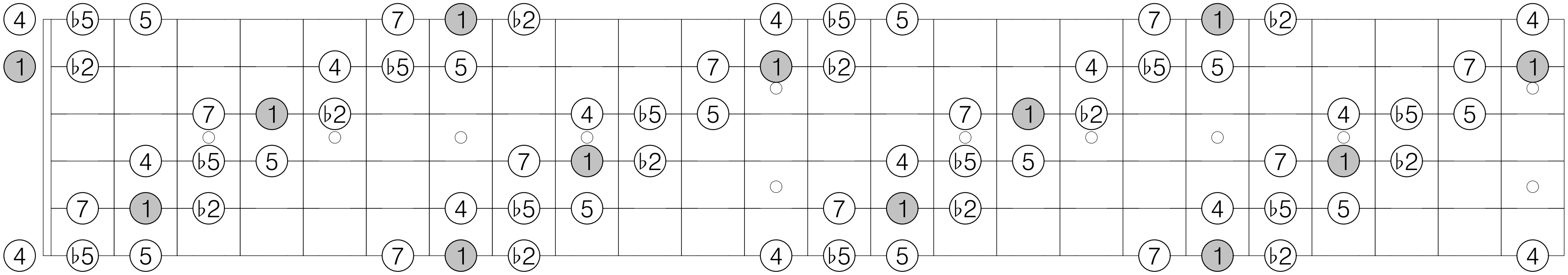

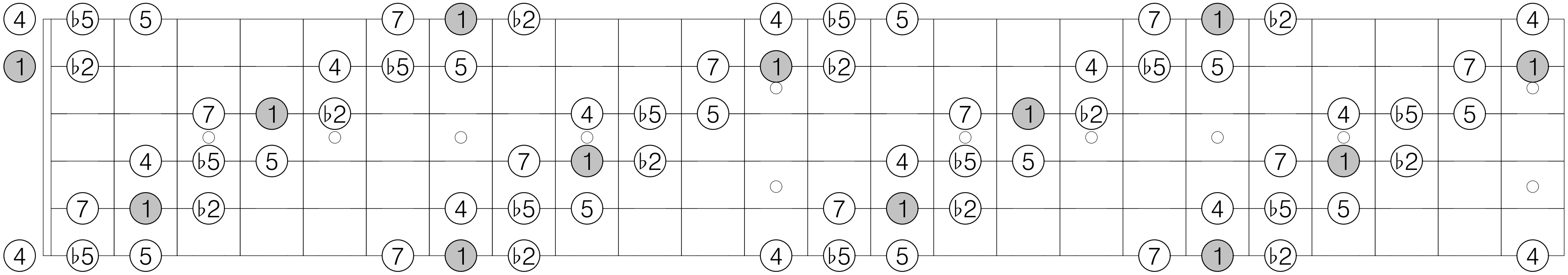

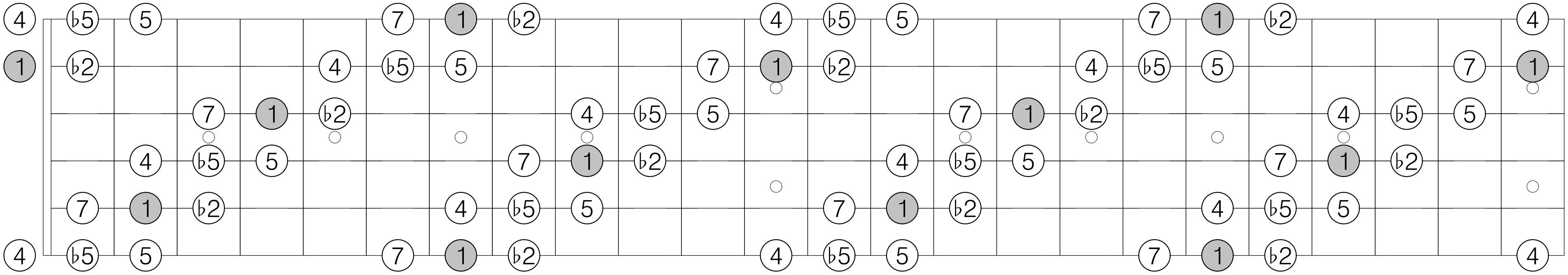

B transposition 2 of Mode 5 [1, 4, 1]

1 3 4 ♭5 ♭7 7 1 3 4 ♭5 ♭7 7

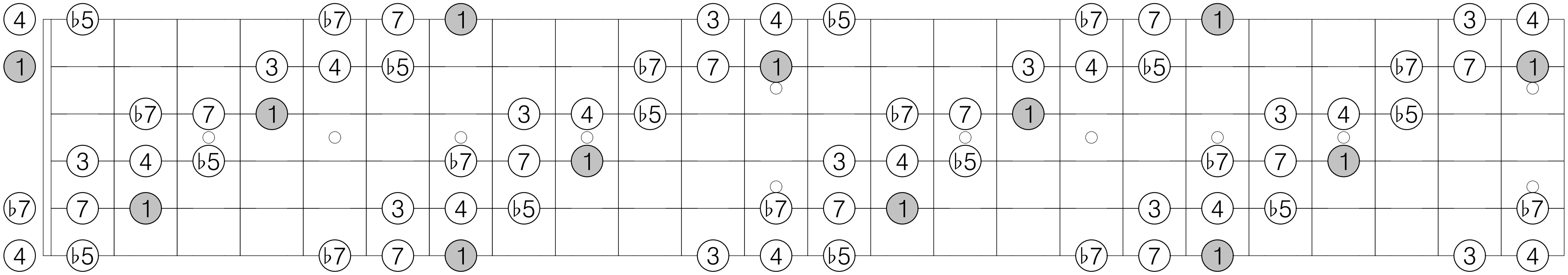

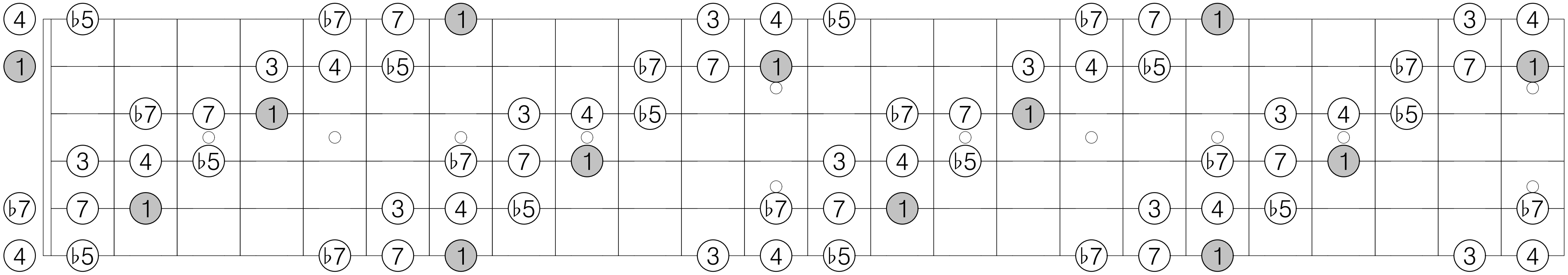

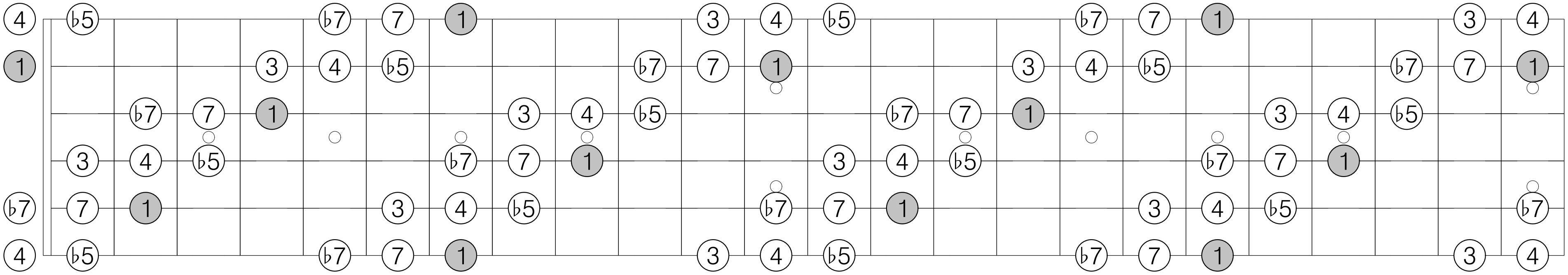

B transposition 3 of Mode 5 [1, 4, 1]

1 ♭2 2 ♭5 5 ♭6 1 ♭2 2 ♭5 5 ♭6

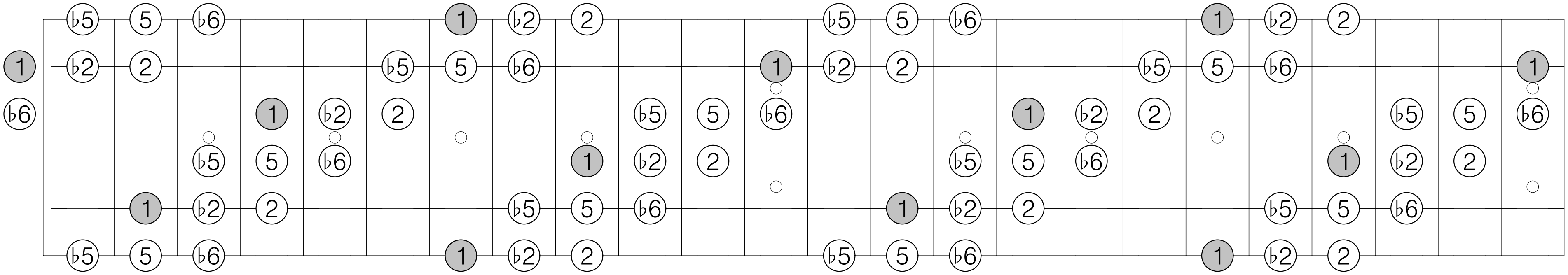

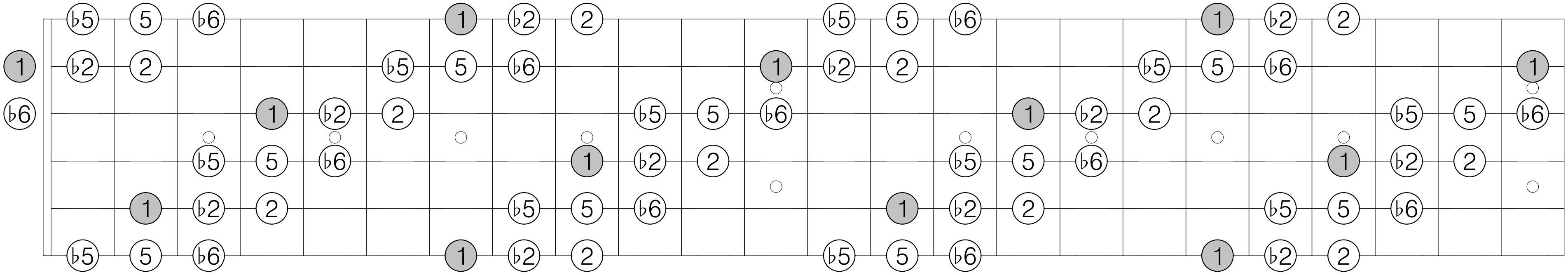

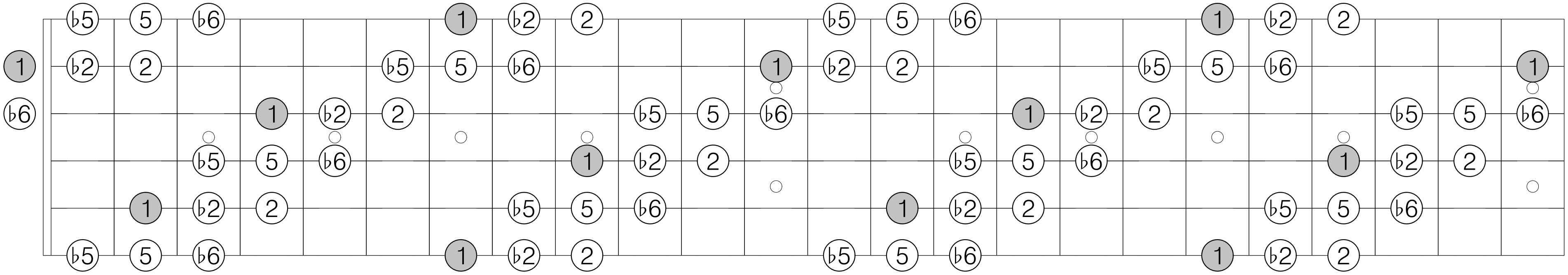

B transposition 1 of Mode 6 [1, 1, 2, 2]

1 ♭2 2 3 ♭5 5 ♭6 ♭7 1 ♭2 2 3 ♭5 5 ♭6 ♭7

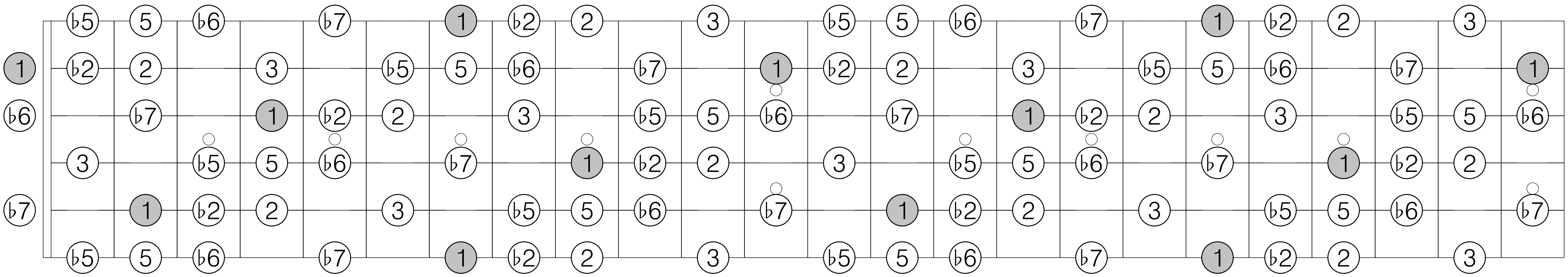

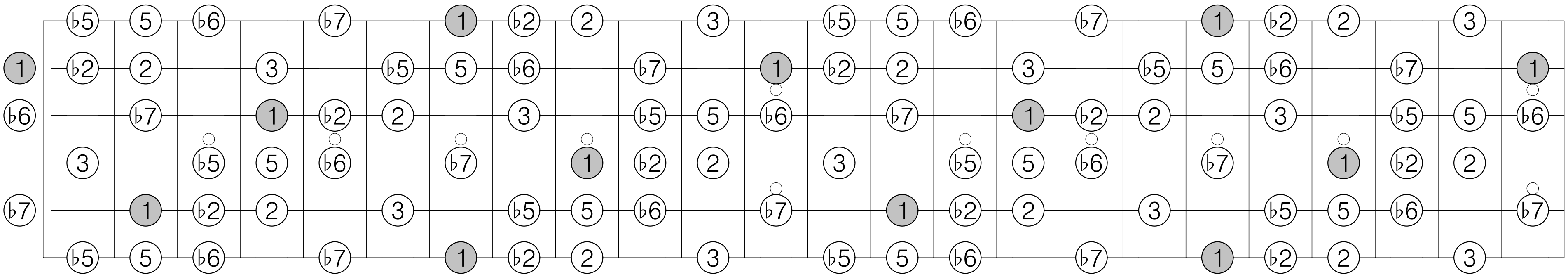

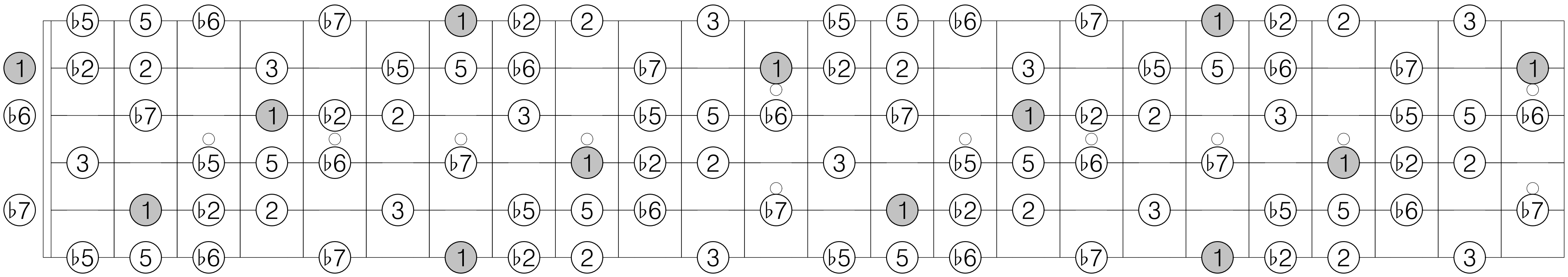

B transposition 2 of Mode 6 [1, 1, 2, 2]

1 ♭2 ♭3 4 ♭5 5 6 7 1 ♭2 ♭3 4 ♭5 5 6 7 1 ♭2 ♭3 4 ♭5 5 6 7

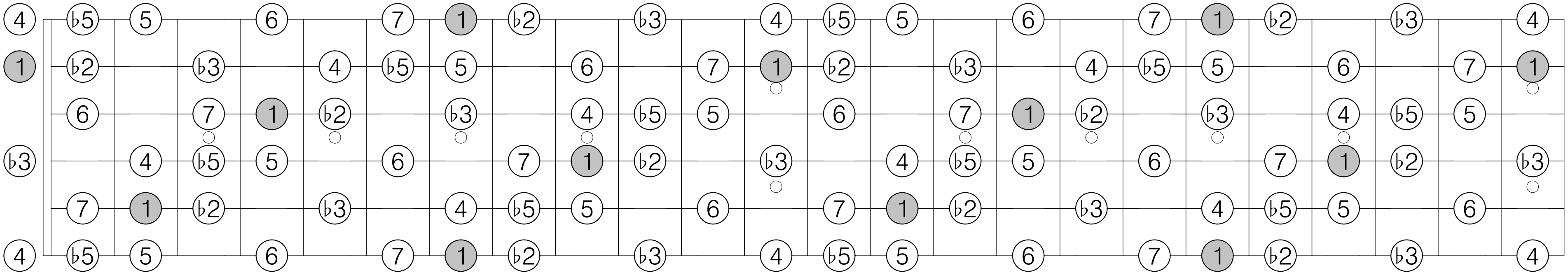

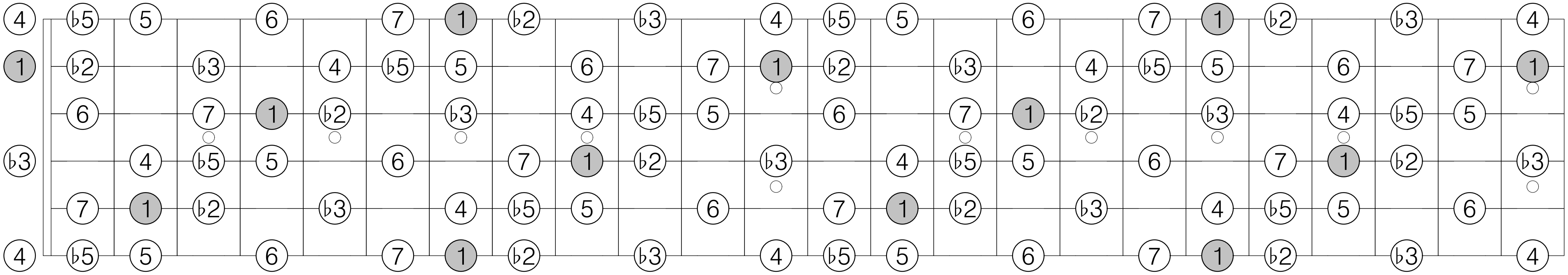

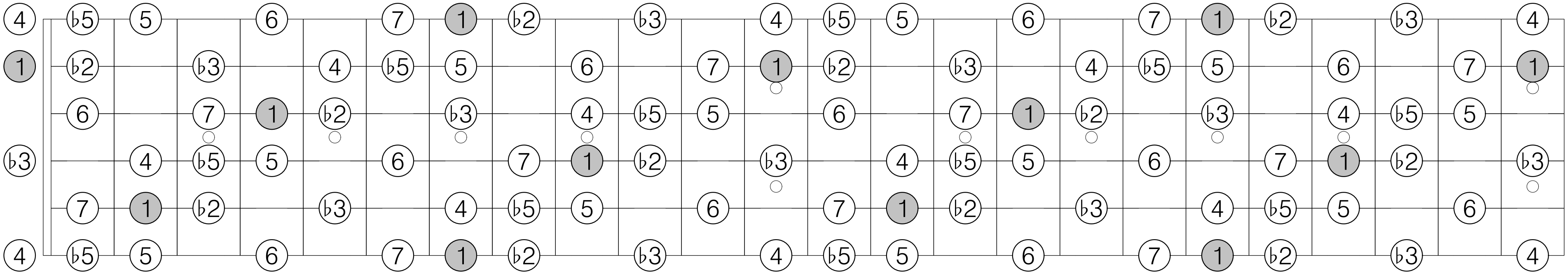

B transposition 3 of Mode 6 [1, 1, 2, 2]

1 2 3 4 ♭5 ♭6 ♭7 7 1 2 3 4 ♭5 ♭6 ♭7 7

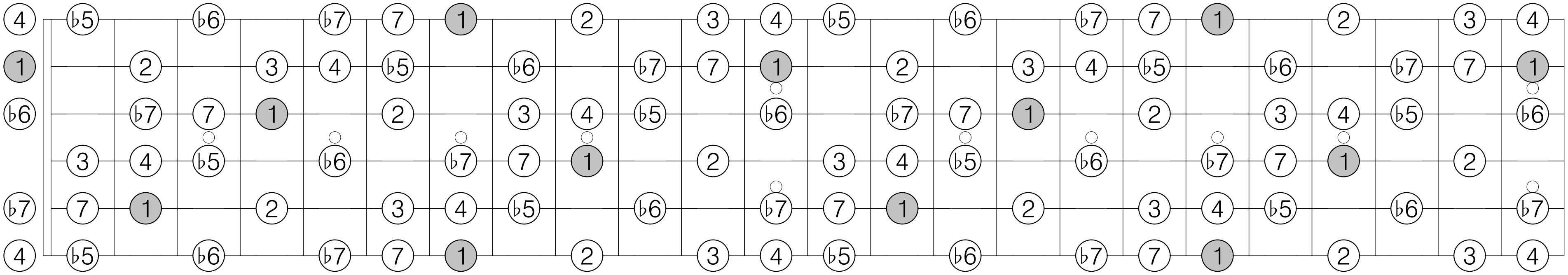

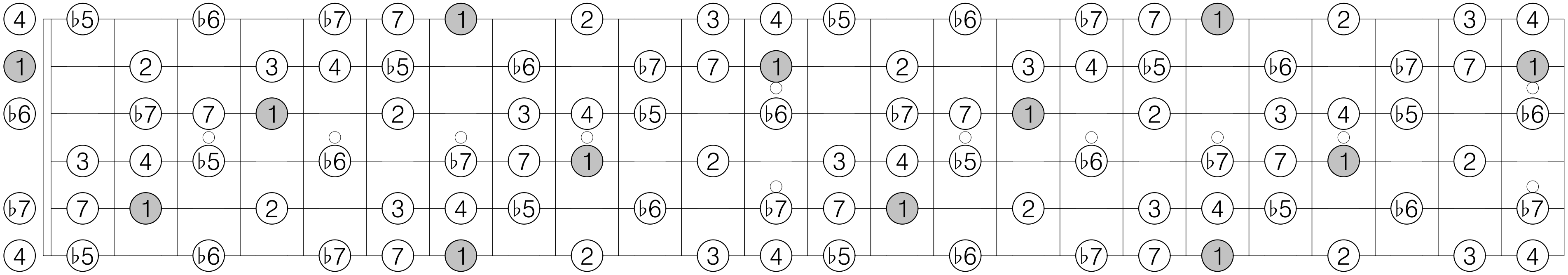

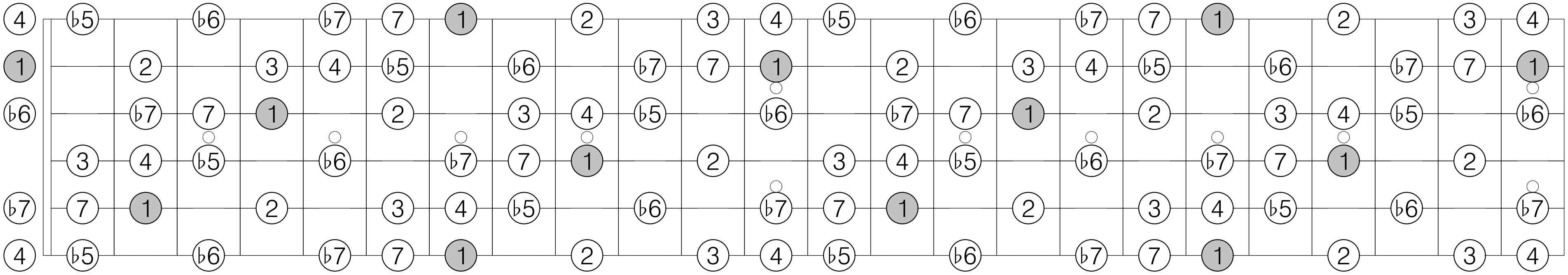

B transposition 4 of Mode 6 [1, 1, 2, 2]

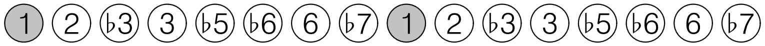

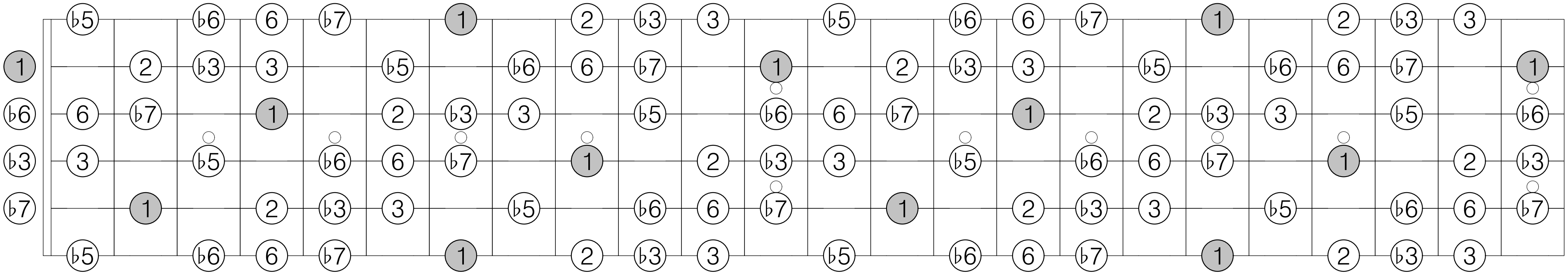

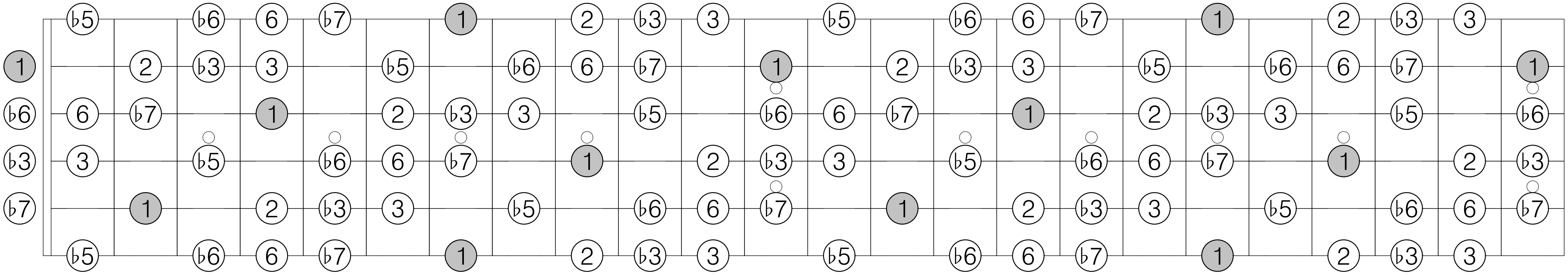

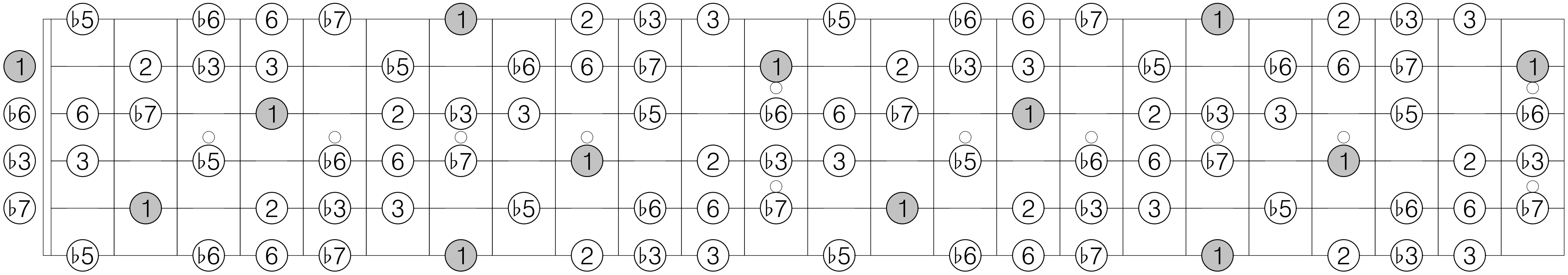

B transposition 1 of Mode 7 [1, 1, 1, 2, 1]

1 ♭2 2 ♭3 4 ♭5 5 ♭6 6 7 1 ♭2 2 ♭3 4 ♭5 5 ♭6 6 7

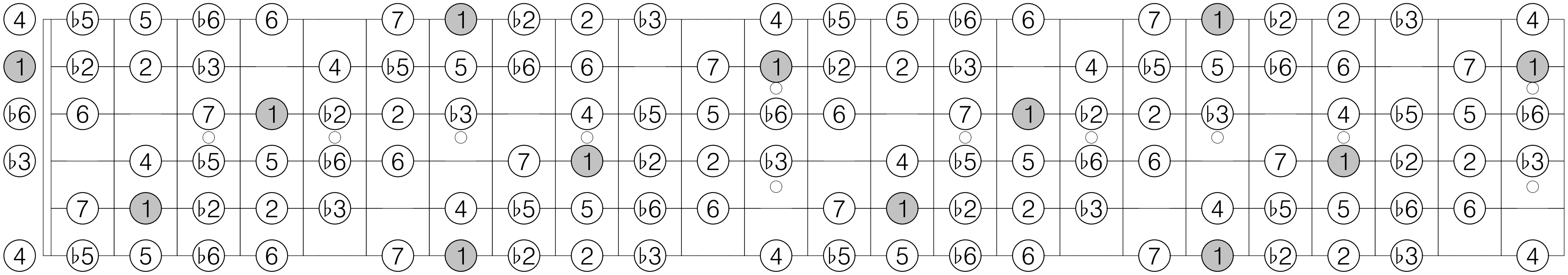

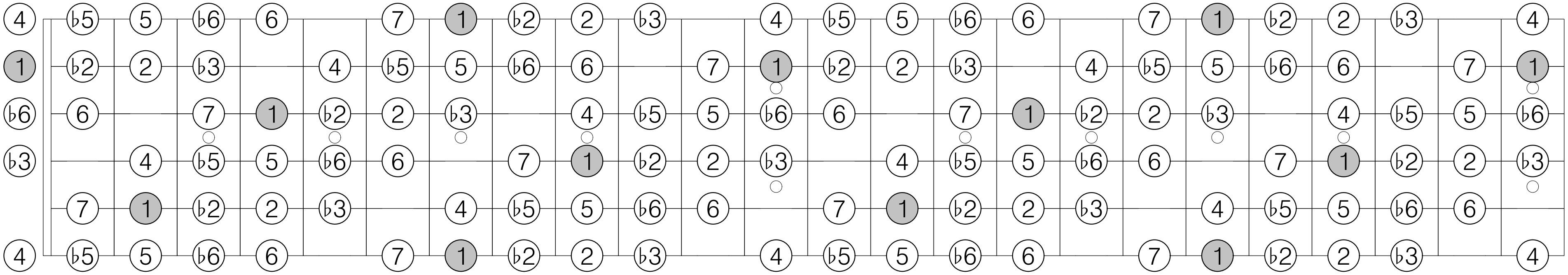

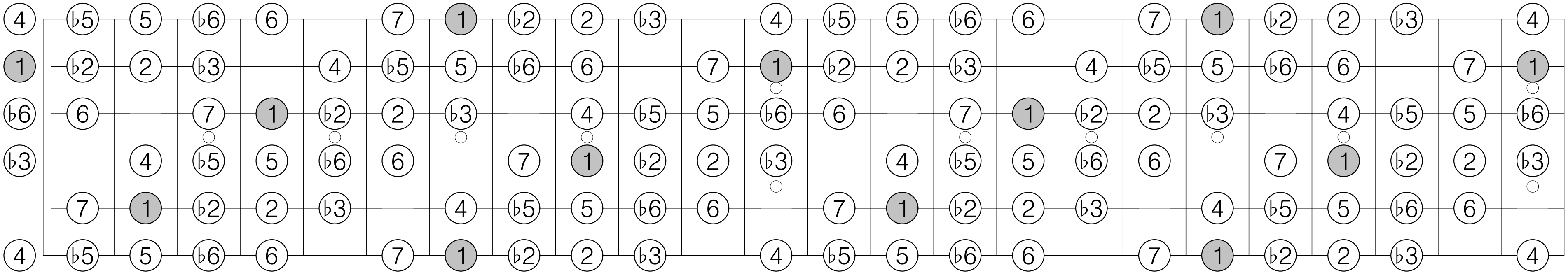

B transposition 2 of Mode 7 [1, 1, 1, 2, 1]

1 ♭2 2 3 4 ♭5 5 ♭6 ♭7 7 1 ♭2 2 3 4 ♭5 5 ♭6 ♭7 7

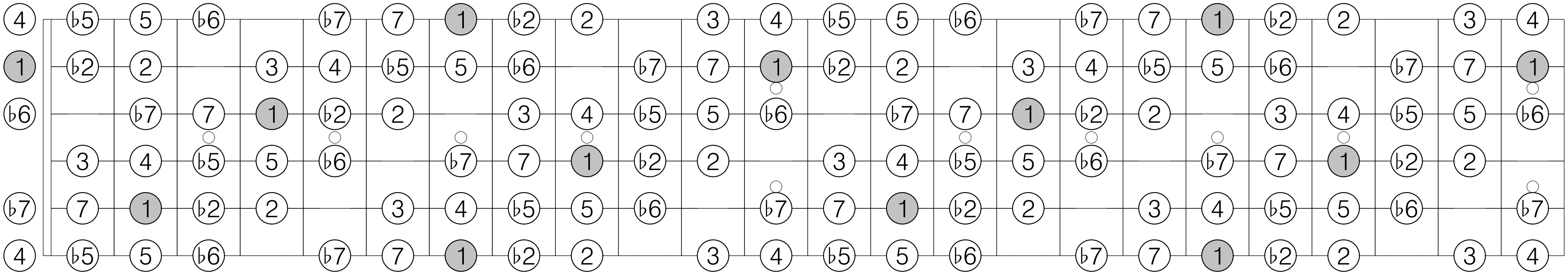

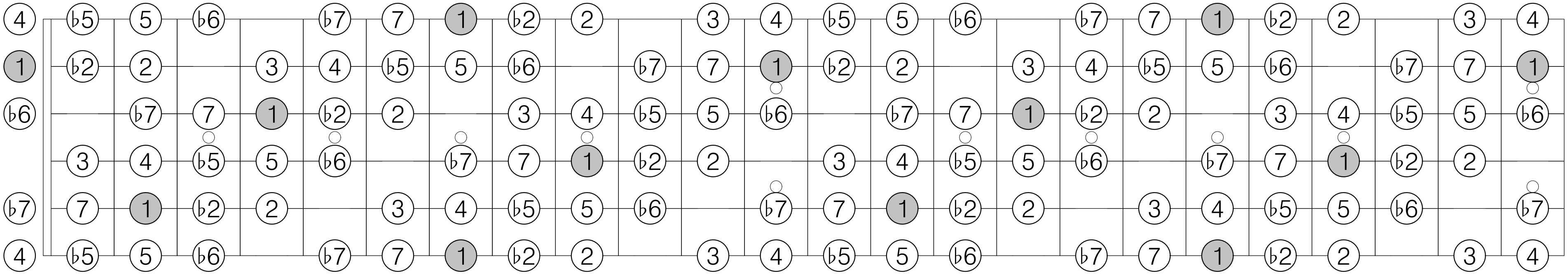

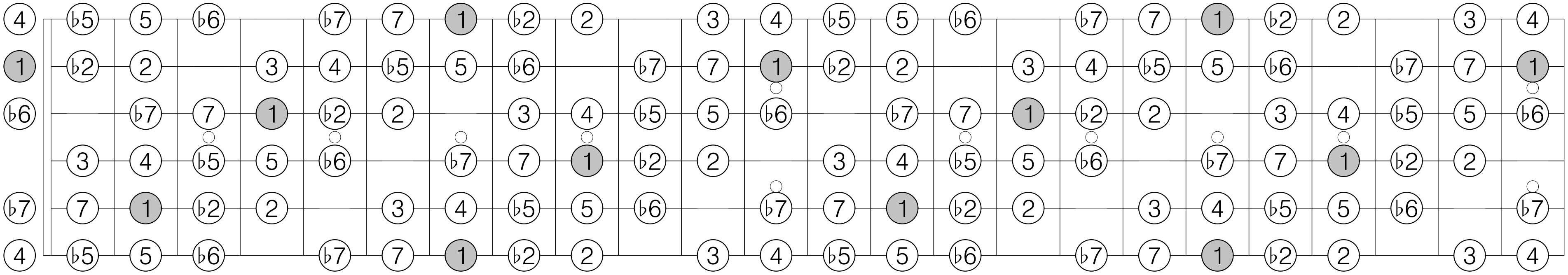

B transposition 3 of Mode 7 [1, 1, 1, 2, 1]

1 ♭2 ♭3 3 4 ♭5 5 6 ♭7 7 1 ♭2 ♭3 3 4 ♭5 5 6 ♭7 7

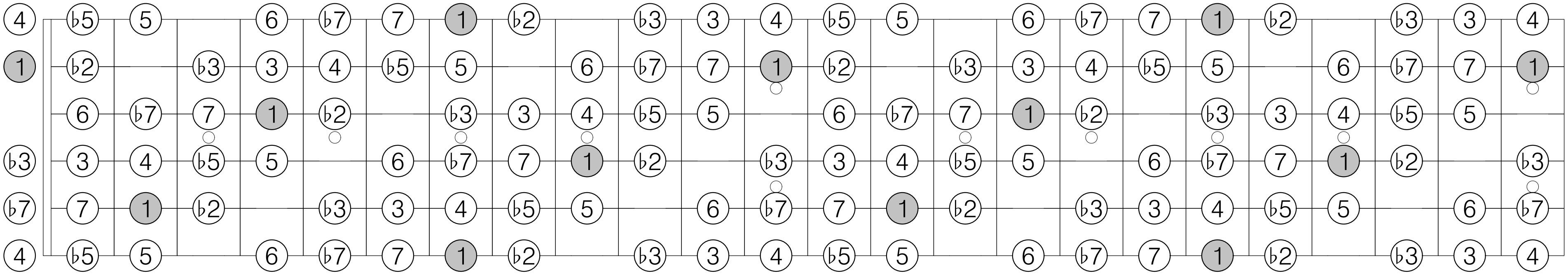

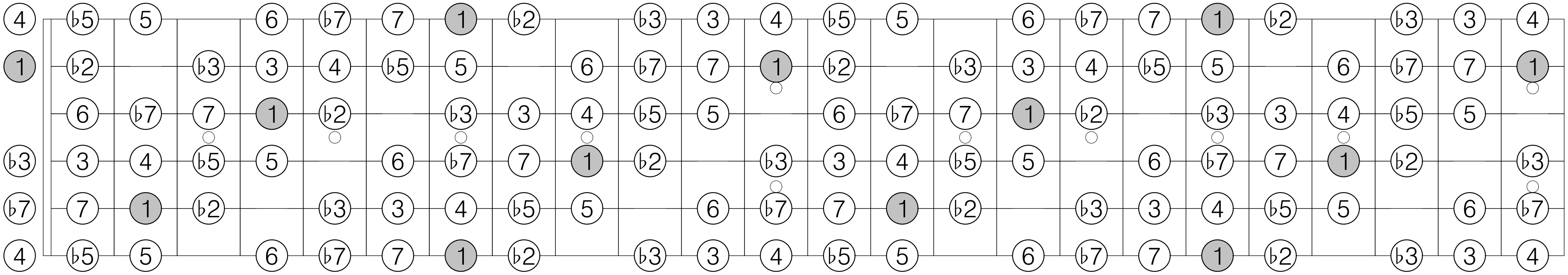

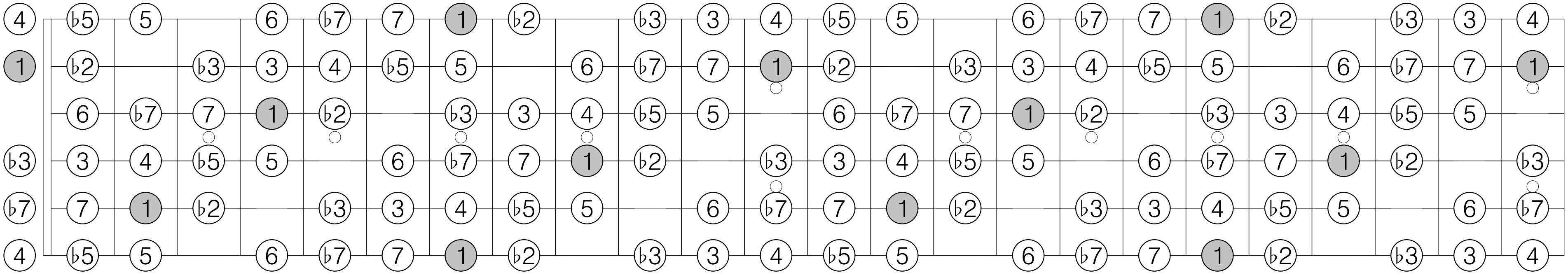

B transposition 4 of Mode 7 [1, 1, 1, 2, 1]

1 2 ♭3 3 4 ♭5 ♭6 6 ♭7 7 1 2 ♭3 3 4 ♭5 ♭6 6 ♭7 7

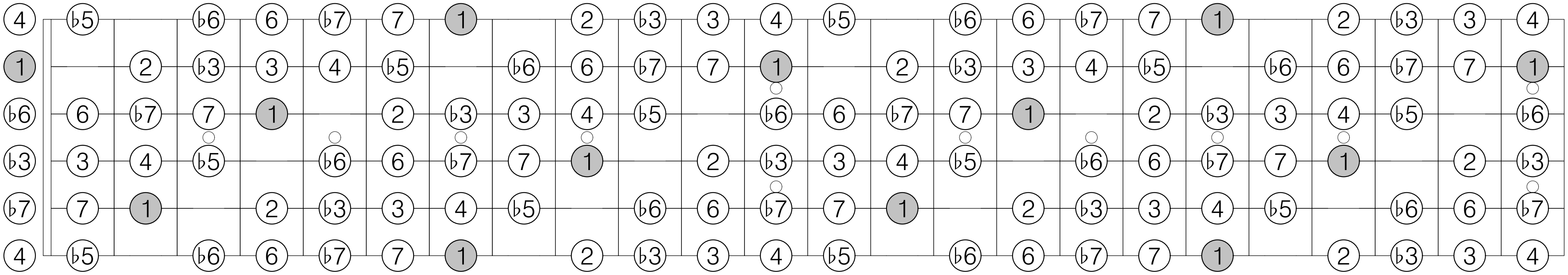

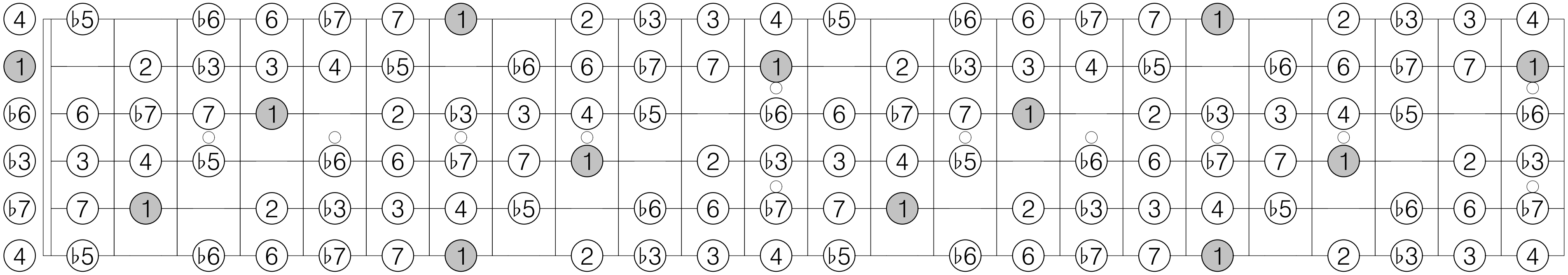

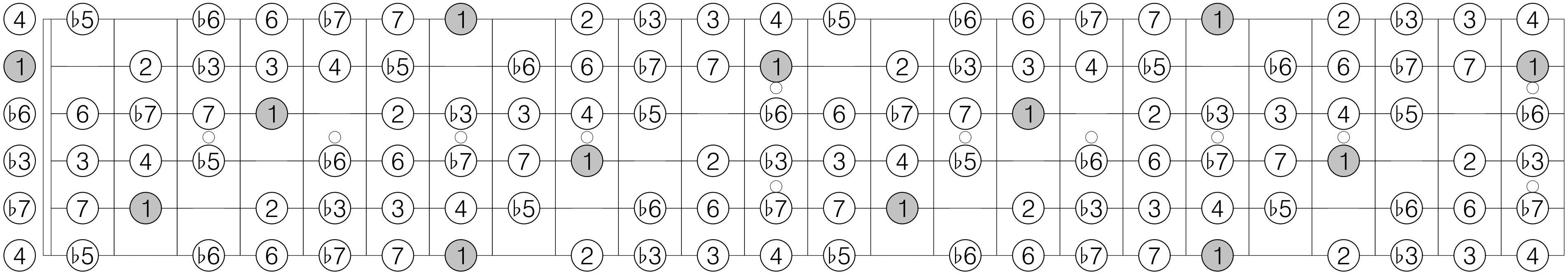
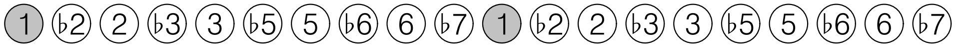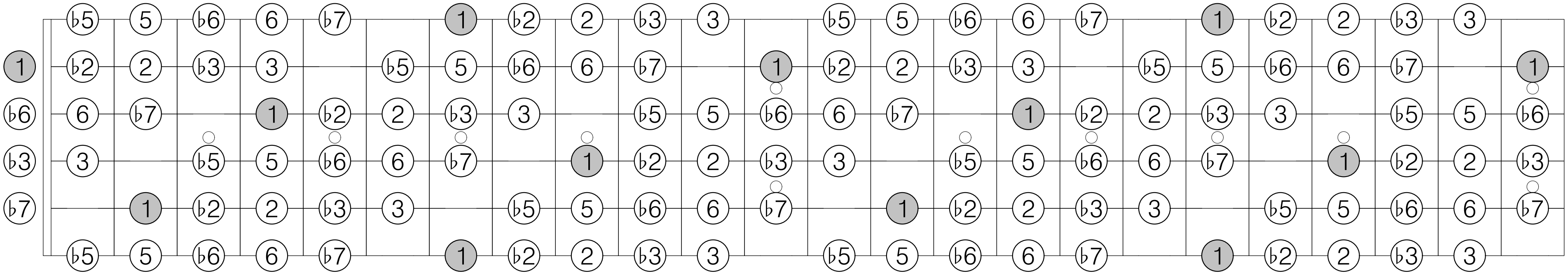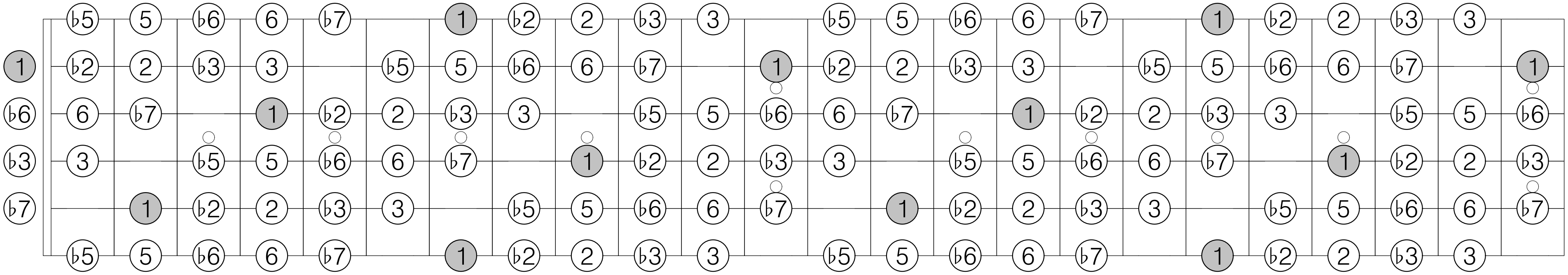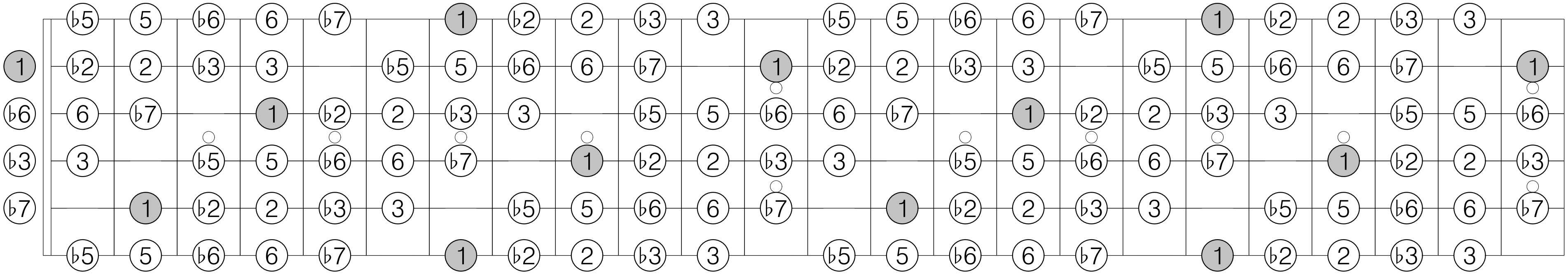
B transposition 5 of Mode 7 [1, 1, 1, 2, 1]